Joint Detection of Almost-Cyclostationary Signals and Estimation of their Cycle Period

Stefanie Horstmann, *Student Member, IEEE,* David Ramírez, *Senior Member, IEEE,* and Peter J. Schreier, *Senior Member, IEEE*

***Abstract*—We propose a technique that jointly detects the presence of almost-cyclostationary (ACS) signals in wide-sense stationary (WSS) noise and provides an estimate of their cycle period. Since the cycle period of an ACS process is not an integer, the approach is based on a combination of a resampling stage and a multiple hypothesis test, which deal separately with the fractional part and the integer part of the cycle period. The approach requires resampling the signal at many different rates, which is computationally expensive. For this reason we propose a filter bank structure that allows us to efficiently resample a signal at many different rates by identifying common interpolation stages among the set of resampling rates.**

***Index Terms*—Almost-cyclostationarity, cycle period estimation, detection, multiple hypothesis test, sample rate conversion.**

I. Introduction

CYCLOSTATIONARY (CS) processes are random processes with periodically varying statistical properties, which arise in many different fields of science and nature such as mechanics, climatology, economics, and communications [1], [2]. For instance, in mechanics CS signals occur due to gear or propeller rotation, and in communications due to modulation, multiplexing, and sampling, see e.g. [1]. Continuous-time signals are typically sampled before further processing. A sampled discrete-time signal is almost-cyclostationary (ACS) if the sampling interval is not a sub-multiple of the cycle period. This is generally the case if the cycle period of the continuous-time signal is unknown [3]. In this work we propose a detector for discrete-time second-order ACS processes.

The detection of ACS signals is of interest in many fields. For instance, in communications it is of great importance in spectrum sensing for cognitive radio, and in mechanics it can be used for fault gear or bearing diagnostics [1], [2]. Typically, state of the art (A)CS detectors assume prior knowledge of the cycle period, e.g. [4], [5], [6]. However, in practice the period might be unknown or not known exactly due to clock or oscillator errors, which decreases the performance of the detectors [7]. The cycle period itself is an interesting signal parameter. For instance, in communications it relates to the symbol rate and carrier frequency [1], [2]. For this reason it is desirable to use a detector that jointly detects ACS signals and estimates their cycle period.

In our preliminary work in [8] we proposed a technique to detect the presence of ACS signals with unknown cycle period in wide-sense stationary (WSS) noise. In this work we extend the technique in two ways: First, in addition to detecting ACS signals, we simultaneously estimate their cycle period. Second, we provide a computationally efficient implementation of the technique. The idea behind our approach is as follows. A multiple hypothesis test is employed to determine the unknown integer part, and a resampling stage deals with the unknown fractional part. For each potential integer part the signal is resampled at potential fractional parts such that the optimal resampling rate yields a CS signal with cycle period equal to the candidate integer part. This allows us to apply the generalized likelihood ratio test (GLRT) derived in [4] for each candidate integer part. Subsequently, the multiple hypothesis test is used to determine the unknown integer part. In order to reach a decision in the overall test WSS vs. ACS signals we use Holm's sequentially rejective test [9], which controls the probability of false alarm of the overall test and simultaneously provides an estimate of the integer part of the cycle period. This result combined with the corresponding optimal resampling rate yields an estimate of the cycle period.

In order to achieve good detection and estimation performance, the grid of candidate resampling rates has to be fine enough, which increases the computational complexity of the technique. For this reason we propose a filter

The work of D. Ramírez has been partly supported by Ministerio de Economía of Spain under projects: OTOSIS (TEC2013-41718-R) and the COMONSENS Network (TEC2015-69648-REDC), by the Ministerio de Economía of Spain jointly with the European Commission (ERDF) under projects ADVENTURE (TEC2015-69868-C2-1-R) and CAIMAN (TEC2017-86921-C2-2-R), by the Comunidad de Madrid under project CASI-CAM-CM (S2013/ICE-2845), and by the German Research Foundation (DFG) under project RA 2662/2-1. S. Horstmann and P. J. Schreier were supported by the German Research Foundation (DFG) under grant SCHR 1384/6-1.

S. Horstmann and P. J. Schreier are with the Department of Electrical Engineering and Information Technology, University of Paderborn, 33098 Paderborn, Germany (e-mail: stefanie.horstmann@sst.upb.de,peter.schreier@sst.upb.de)

D. Ramírez is with the Department of Signal Theory and Communications, Universidad Carlos III de Madrid, Spain and the Gregorio Marañón Health Research Institute, Madrid, Spain (e-mail: david.ramirez@uc3m.es)

bank structure to efficiently resample the signal at many different rates.

II. Problem Formulation

We consider a continuous-time zero-mean multivariate process $\mathbf{u}(t) \in \mathbb{C}^L$ that is second-order cyclostationary with cycle period T_0, or, equivalently, cyclostationary with fundamental cycle frequency $\alpha_0 = 1/T_0$. Hence, it has a periodic matrix-valued covariance function with period T_0

$$\mathbf{R}(t,\tau) = \mathrm{E}\left[\mathbf{u}(t)\mathbf{u}^{\mathrm{H}}(t-\tau)\right] = \mathbf{R}(t+T_0,\tau) \in \mathbb{C}^{L\times L}. \tag{1}$$

Once the signal $\mathbf{u}(t)$ is sampled with sampling interval $T_s < T_0$, the discrete-time signal $\mathbf{u}[n]$ is ACS with fundamental cycle frequency $\tilde{\alpha}_0 = T_s/T_0$ [10]. Now we define a cycle period P as the reciprocal of $\tilde{\alpha}_0$, i.e. $P = T_0/T_s$, which is in general a real number rather than an integer. Assuming that $T_0 \geq 3/2T_s$, we can divide the cycle period P into an integer and fractional part as follows

$$P = P_{\text{int}} + \epsilon, \tag{2}$$

where $P_{\text{int}} = 2, 3, \ldots$ and $\epsilon \in [-0.5, 0.5)$.

Now our aim is to solve the following hypothesis test

$$\begin{aligned} \mathcal{H} &: \mathbf{u}[n] \text{ is WSS}, \\ \mathcal{A} &: \mathbf{u}[n] \text{ is ACS}. \end{aligned} \tag{3}$$

Moreover, if the presence of an ACS signal is detected, then we simultaneously estimate the cycle period P. We assume that $\mathbf{u}[n]$ is proper complex Gaussian and that we observe M i.i.d. realizations of $\mathbf{u}[n]$ of length N. We propose a detector to solve the hypothesis test (3) by combining a resampling stage, which enables to apply the GLRT proposed in [4], with a multiple hypothesis test. The resampling stage allows us to estimate the fractional part of the cycle period, and the multiple hypothesis test provides an estimate for the integer part if the presence of ACS signals was detected. In order to reliably estimate the fractional part of the cycle period, it is necessary to resample the signal at many different rates. Since this is a computationally complex process, we also propose a filter bank structure to decrease the computational costs.

III. Resampling Stage

In order to handle the unknown fractional part of the cycle period, let us assume first that the integer part of the cycle period P_{int} is known. Now our goal is to find the resampling rate Δ such that the resampled signal becomes CS with cycle period P_{int}, which allows us to apply the test CS vs. WSS proposed in [4]. Specifically, for a set of D candidate resampling rates

$$\Delta_d = \frac{P_{\text{int}}}{P_{\text{int}} + \epsilon_d}, \quad d = 1, \ldots, D, \tag{4}$$

where $\epsilon_d = -0.5 + (d-1)/D$, we obtain the resampled signal $\tilde{\mathbf{u}}_d[m]$ for which we compute the GLRT statistic proposed in [4]. Let us briefly outline the computation of the statistic:

$$\mathcal{G}(\Delta_d | P_{\text{int}}) = \prod_{k=1}^{N/P_{\text{int}}} \det\left(\hat{\mathbf{C}}_k\right), \tag{5}$$

where $\hat{\mathbf{C}}_k$ is the kth $LP_{\text{int}} \times LP_{\text{int}}$ diagonal block of

$$\hat{\mathbf{C}} = \left[\mathrm{diag}_L(\hat{\mathbf{S}})\right]^{-1/2} \mathrm{diag}_{LP_{\text{int}}}(\hat{\mathbf{S}}) \left[\mathrm{diag}_L(\hat{\mathbf{S}})\right]^{-1/2}. \tag{6}$$

Here, $\mathrm{diag}_L(\hat{\mathbf{S}})$ and $\mathrm{diag}_{LP_{\text{int}}}(\hat{\mathbf{S}})$ denote block-diagonal matrices obtained from the $L \times L$ and $LP_{\text{int}} \times LP_{\text{int}}$ blocks on the diagonal of

$$\hat{\mathbf{S}} = \frac{1}{M}\sum_{i=1}^{M} \mathbf{z}_i \mathbf{z}_i^H, \tag{7}$$

where

$$\mathbf{z}_i = (\mathbf{L}_{N,N/P_{\text{int}}} \otimes \mathbf{I}_L)(\mathbf{F}_N \otimes \mathbf{I}_L)^H \mathbf{y}_i, \tag{8}$$

$\mathbf{L}_{N,N/P_{\text{int}}}$ is the commutation matrix, $\mathbf{F}_N$ is the DFT matrix, and $\mathbf{y}_i = [\tilde{\mathbf{u}}_i^T[0] \cdots \tilde{\mathbf{u}}_i^T[N-1]]^T$.

Subsequently, we find the maximum likelihood (ML) estimate of the resampling rate Δ_d or equivalently, due to their relation in (4), the ML estimate of the fractional part of the cycle period, by maximizing the likelihood under $\mathcal{A}$. Equivalently, we can minimize the GLR (5) for a given integer part P_{int}

$$\Delta_{\min} = \underset{\Delta_{d=1,\ldots,D}}{\arg\min}\ \mathcal{G}(\Delta_d | P_{\text{int}}). \tag{9}$$

In order to make the resampling grid fine enough, D must be a large number, and hence the resampling of the signal at D different rates is computationally quite expensive. There are efficient strategies to convert the sample rate, but only for a single given Δ_d, see e.g. [11]. In the following, we propose a filter bank that is designed to deal with a set of D different resampling rates for each candidate integer P_{int}.

Sample Rate Conversion

The sample rate conversion with the proposed filter bank structure is illustrated in Figure 1. Each resampling rate Δ_d for $d = 1, \ldots, D$ specifies an interpolation factor L_d and decimation factor M_d such that $\frac{L_d}{M_d} = \Delta_d$. Since the number of resampling rates D can be quite large, it is desirable to exploit common interpolation stages among all upsampling rates L_d for $d = 1, \ldots, D$ in order to save as many computations as possible. To this end, each L_d is factorized into a product of prime numbers $L_d = \prod_{\lambda=1}^{\Lambda} L_d^{(\lambda)}$, where $L_d^{(1)} \geq L_d^{(2)} \geq \cdots \geq L_d^{(\Lambda)}$. Within the set of D upsampling rates, we identify common factors such as $\prod_{\kappa=1}^{K} L_i^{(\kappa)} = \prod_{\kappa=1}^{K} L_j^{(\kappa)}$ for $K < \Lambda$, $i \neq j$ and $i, j \in \{1, \ldots, D\}$. Hence, the signal is interpolated only once at those common stages. After the signal has been interpolated at all required rates, it is downsampled by the respective rates M_d. Each interpolation stage is implemented as a polyphase filter.

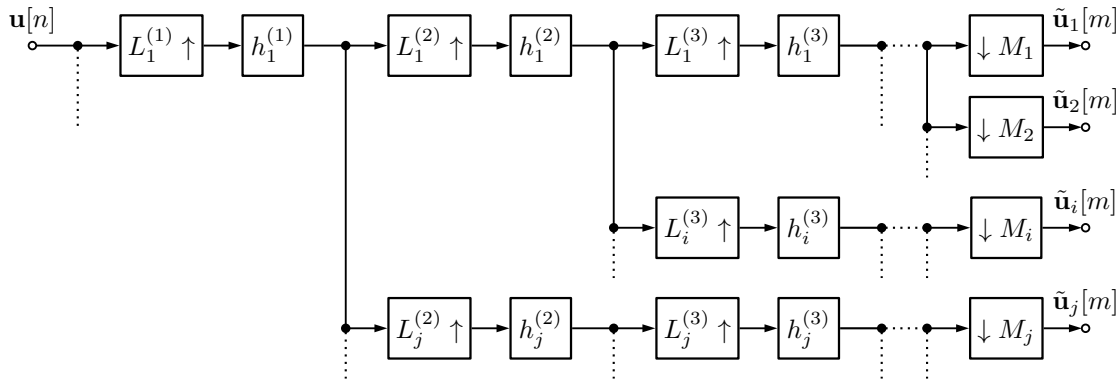

Fig. 1: Proposed filter bank structure to convert the sampling rate $1/T_s$ to D different rates.

IV. Multiple Hypothesis Test

The integer part of the cycle period in the detection problem can be handled by a multiple hypothesis test, which at the same time provides an estimate of the integer part of the cycle period P_{int}. To this end, the multiple hypothesis test is implemented as a set of binary tests with a common null hypothesis, i.e.

$$\mathcal{H}: \ \mathbf{u}[n] \text{ is WSS}, \tag{10}$$

versus the following set of alternatives

$$\begin{aligned} \mathcal{A}_1 &: \ \mathbf{u}[n] \text{ is ACS with } P_{\text{int}} = 2, \\ \mathcal{A}_2 &: \ \mathbf{u}[n] \text{ is ACS with } P_{\text{int}} = 3, \\ &\vdots \\ \mathcal{A}_K &: \ \mathbf{u}[n] \text{ is ACS with } P_{\text{int}} = P_{\max}, \end{aligned} \tag{11}$$

where $P_{\max} = K + 1$ is the largest integer cycle period under consideration. In the overall test WSS vs. ACS we reject $\mathcal{H}$ if it is rejected in at least one of the binary tests. The decision is reached by employing Holm's sequentially rejective test [9]. This test controls the familywise error rate (FWER), which is the probability of at least one false rejection and, therefore, in our case, it is identical to the probability of false alarm p_{fa} of the test in (3), i.e.

$$\begin{aligned} \text{FWER} &= P\left(\text{reject } \mathcal{H} \text{ in any test } \mathcal{H} \text{ vs. } \mathcal{A}_i | \mathcal{H}\right) \\ &\equiv p_{\text{fa}}. \end{aligned} \tag{12}$$

Following Holm's test procedure we reach a decision in the overall test by obtaining the minimum p-value p_γ, where γ indicates the index of the corresponding binary test, i.e.

$$\gamma = \underset{i=1,\ldots,K}{\arg\min}\, p_i,$$

which we compare to a threshold p_{fa}/K. Hence, if $p_\gamma \geq p_{\text{fa}}/K$, then we fail to reject $\mathcal{H}$, and if $p_\gamma < p_{\text{fa}}/K$, we reject $\mathcal{H}$ and the signal is said to be ACS. To estimate the p-values we exploit that the distribution of the GLR under $\mathcal{H}$ for a given Δ_d, $\mathcal{G}(\Delta_d|P_{\text{int}})$, can be approximated as the distribution of a product of independent Beta random variables [12]

$$1/\mathcal{G}(\Delta_d|P_{\text{int}}) \overset{\mathcal{D}}{=} \prod_{k=1}^{N/P_{\text{int}}} \prod_{i=1}^{P_{\text{int}}-1} \prod_{j=1}^{L} Y_{ij}^{(k)}, \tag{13}$$

where $Y_{ij}^{(k)} \sim \text{Beta}(\alpha_{ij}, \beta_i)$ with the parameters

$$\begin{aligned} \alpha_{ij} &= M - iL - (j-1), \\ \beta_i &= iL. \end{aligned} \tag{14}$$

In order to obtain the distribution of the minimum value of the statistic $\mathcal{G}(\Delta_{\min}|P_{\text{int}})$, we simplify the problem by assuming independence among the GLRTs to apply results from order statistics [13]. Specifically, we approximate the cumulative distribution of $\mathcal{G}(\Delta_{\min}|P_{\text{int}})$ as

$$F_1(\mathcal{G}(\Delta_{\min}|P_{\text{int}})) = 1 - [1 - F(\mathcal{G}(\Delta_{\min}|P_{\text{int}}))]^D. \tag{15}$$

This result allows us to estimate the p-value p_i for each binary hypothesis test $\mathcal{H}$ vs. $\mathcal{A}_i$ for $i = 1, \ldots, K$.

We can at the same time obtain an estimate of the cycle period of the ACS process as follows. If the multiple hypothesis test rejects $\mathcal{H}$, the integer part P_{int} is estimated as

$$\hat{P}_{\text{int}} = \gamma + 1. \tag{16}$$

Furthermore, the fractional part of the cycle period is obtained from (4) as

$$\hat{\epsilon} = \hat{P}_{\text{int}}(1/\Delta_{\min}^{\gamma} - 1), \tag{17}$$

where $\Delta_{\min}^{\gamma}$ denotes the optimal resampling rate corresponding to hypothesis $\mathcal{A}_\gamma$. Hence, the estimate of the cycle period is given by

$$\hat{P} = \hat{P}_{\text{int}} + \hat{\epsilon}. \tag{18}$$

V. Numerical Results

In this section we evaluate the performance of the proposed technique and compare it to the techniques

presented in [5] and [6]. For the evaluation we use Monte Carlo simulations in a communications scenario:

$$\begin{aligned} \mathcal{H}: \ & \mathbf{u}[n] = \mathbf{w}[n], \\ \mathcal{A}: \ & \mathbf{u}[n] = \mathbf{H}[n] * \mathbf{s}[n] + \mathbf{w}[n], \end{aligned} \tag{19}$$

where $\mathbf{w}[n] \in \mathbb{C}^L$ is colored Gaussian noise generated with a moving average filter of order 20 and $\mathbf{H}[n] \in \mathbb{C}^{L \times L}$ is a Rayleigh fading channel with a delay spread of 10 times the symbol duration T_0 and a sampling frequency of $f_s = 1.2$ MHz. The ACS transmission signal $\mathbf{s}[n] \in \mathbb{C}^L$ is obtained by subsampling a long QPSK-signal with raised-cosine pulse shaping and roll-off factor 1. In order to obtain M realizations, which are required to obtain the test statistic, we generate one long sequence $\mathbf{u}[n]$ and cut that into M pieces.

We obtain the joint probability of detection and correctly estimating the cycle period

$$p_{\mathrm{d}} = P(p_\gamma < p_{\mathrm{fa}}/K \ \cap \ |\hat{P} - P| < 1/D \mid \mathcal{A}) \tag{20}$$

for a given probability of false alarm p_{fa}. The benchmark techniques [5] and [6] do not provide estimates of the cycle period — they rather need this knowledge a priori. For a fair comparison we obtain the test statistics of [5] and [6] for the same grid of cycle periods we use for our technique. Moreover, instead of performing a multiple hypothesis test, we simply use the maximum test statistic. If this is greater than the threshold used to solve the detection problem, the cycle period corresponding to this maximum test statistic is its estimate. Other cycle period estimation techniques such as [14], [15] cannot be used as comparisons since they are only cycle period estimators but not ACS signal detectors.

For the simulation we use the following parameters: A symbol duration of $T_0 = 2.6583\mu$s, which yields a cycle period of $P = 3.19$, $L = 2$ antennas, $N = 300$ samples per antenna, $M = 25$ snapshots, and a probability of false alarm fixed at $p_{\mathrm{fa}} = 5\%$. In Figure 2 we can see p_{d} for a scenario with a resampling grid of size $D = 100$, where the true cycle period lies on the grid of candidates. As can be seen, the proposed technique substantially outperforms the two competitors. For instance, for an SNR of -3dB we observe a relative performance gain of 35% and 58% of our technique compared to [5] and [6], respectively. If we now choose a grid size $D = 110$, where the true cycle period is off-grid by $0.9 \cdot 10^{-3}$, we observe that the performance of all three techniques decreases although the proposed method still significantly outperforms the competitors.

Generally, the appropriate choice of D depends on the frequency resolution of the estimates, which is in the order of $1/N$. Since the resolution of the grid of fractional parts is in the order of $1/D$, a reasonable choice for D would be $D \geq N$ as illustrated in the supplementary material.

Matlab code is available to download from: https://github.com/SSTGroup/Cyclostationary-Signal-Processing

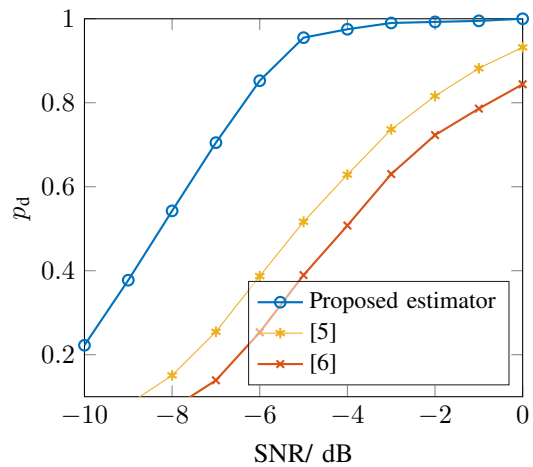

Fig. 2: Probability of jointly detecting ACS signals and estimating P for $p_{\mathrm{fa}} = 0.05$ for the following scenario: $P = 3.19$, $L = 2$ antennas, $N = 300$ samples, $M = 25$ realizations, $P_{\max} = 10$, and $D = 100$

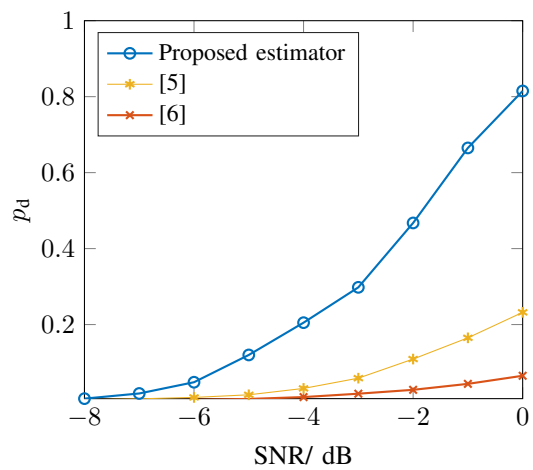

Fig. 3: Probability of jointly detecting ACS signals and estimating P for $p_{\mathrm{fa}} = 0.05$ for the following scenario: $P = 3.19$, $L = 2$ antennas, $N = 300$ samples, $M = 25$ realizations, $P_{\max} = 10$, and $D = 110$

However, the larger D the higher the computational costs. Therefore, the price to pay for good performance is computational complexity. Comparing the relative computation time of a MATLAB implementation with respect to the technique proposed in [5] reveals that our detector requires double the computation time, whereas [6] requires only one fifth of the time of [5]. The relative computational complexity of the techniques is independent of the grid size D.

VI. Conclusion

We have proposed a technique that jointly detects almost-cyclostationarity and estimates the cycle period. While our technique is more computationally complex than competing techniques, it also substantially outperforms them, which we have shown for a practically relevant spectrum sensing application in cognitive radio.

REFERENCES

[1] W. A. Gardner, A. Napolitano, and L. Paura, "Cyclostationarity: Half a century of research," *Signal Process.*, vol. 86, no. 4, pp. 639–697, 2006.

[2] E. Serpedin, F. Panduru, I. Sar, and G. B. Giannakis, "Bibliography on cyclostationarity," *Signal Process.*, vol. 85, no. 12, pp. 2233–2303, 2005.

[3] G. Giannakis, "Cyclostationary Signal Analysis," in *The Digital Signal Processing Handbook*, V. K. Madisetti and D. B. Williams, Eds. Boca Raton: CRC Press LLC, 1999, ch. 17.

[4] D. Ramírez, P. J. Schreier, J. Vía, I. Santamaría, and L. L. Scharf, "Detection of multivariate cyclostationarity," *IEEE Trans. Signal Process.*, vol. 63, no. 20, pp. 5395–5408, 2015.

[5] J. Lundén, V. Koivunen, A. Huttunen, and H. V. Poor, "Collaborative cyclostationary spectrum sensing for cognitive radio systems," *IEEE Trans. Signal Process.*, vol. 57, no. 11, pp. 4182–4195, 2009.

[6] P. Urriza, E. Rebeiz, and D. Cabric, "Multiple antenna cyclostationary spectrum sensing based on the cyclic correlation significance test," *IEEE J. Sel. Areas Commun.*, vol. 31, no. 11, pp. 2185–2195, 2013.

[7] Y. Zeng and Y.-C. Liang, "Robustness of the cyclostationary detection to cyclic frequency mismatch," *IEEE 21st Int. Symp. on Pers. Indoor and Mobile Radio Comm.*, pp. 2704–2709, 2010.

[8] S. Horstmann, D. Ramírez, and P. J. Schreier, "Detection of almost-cyclostationarity : an approach based on a multiple hypothesis test," *Proc. Asilomar Conference on Signals, Systems and Computers*, 2017.

[9] S. Holm, "A simple sequentially rejective multiple test procedure," *Scand. J. Statist.*, vol. 6, no. 2, pp. 65–70, 1979.

[10] L. Izzo and A. Napolitano, "Higher-order cyclostationarity properties of sampled time-series," *Signal Process.*, vol. 54, no. 3, pp. 303–307, 1996.

[11] T. Hentschel and G. Fettweis, "Sample rate conversion for software radio," *IEEE Communications Magazine*, no. August, pp. 142–150, 2000.

[12] N. H. Klausner, M. R. Azimi-Sadjadi, and L. L. Scharf, "Detection of spatially correlated time series from a network of sensor arrays," *IEEE Trans. Signal Process.*, vol. 62, no. 6, pp. 1396–1407, 2014.

[13] N. Balakrishnan and A. Clifford Cohen, *Order Statistics and Inference*. Academic Press, INC., 1991.

[14] H. Hurd and N. L. Gerr, "Graphical methods for determining the presence of periodic correlation," *J. Time Ser. Anal.*, vol. 12, no. 4, pp. 337–350, 1991.

[15] J. Wang, T. Chen, and B. Huang, "Cyclo-period estimation for discrete-time cyclo-stationary signals," *IEEE Trans. Signal Process.*, vol. 54, no. 1, pp. 83–94, 2006.