What are the four layers of IoT architecture? What is the primary function of each.

IoT architecture is organized into four layers, where each layer performs a specific function for the smooth operation of the system.

1. Perception Layer
Perception Layer is the first and lowest layer of IoT architecture that deals with sensing and collecting data from the physical environment using sensors and smart devices.

Primary Function:
Its main function is to capture real-time data from the surroundings.

2. Network Layer
Network Layer is the communication layer of IoT architecture that connects devices and transfers the collected data to the processing systems through various communication technologies.

Primary Function:
Its main function is to transmit data from the perception layer to the processing layer in a secure and reliable manner.

3. Processing Layer (Middleware Layer)
Processing Layer is the central layer of IoT architecture that processes, analyzes, and stores the received data using computational resources such as cloud platforms and databases.

Primary Function:
Its main function is to convert raw data into meaningful and useful information for decision-making.

4. Application Layer
Application Layer is the topmost layer of IoT architecture that provides application-specific services and interfaces to end users based on the processed data.

Primary Function:
Its main function is to deliver processed information and services to users in an understandable form.

© Ramit Pariyar

Explain the main environment characteristic that impact the performance of IoT systems.

The performance of an IoT system is rarely determined by its hardware alone; the environment in which it operates plays a massive role in its reliability and efficiency. These characteristics can be categorized into physical, electromagnetic, and data-driven factors.

1. Physical and Weather Conditions

IoT devices are often deployed in harsh or remote locations where nature directly interferes with their operation.

Temperature Extremes: High heat can lead to thermal throttling of processors or battery degradation, while extreme cold can reduce battery capacity and cause mechanical brittle failure.

Humidity and Moisture: In industrial or agricultural settings, moisture can cause short circuits or corrosion (oxidation) of the sensors, leading to "sensor drift" where readings become inaccurate over time.

Physical Obstructions: Urban environments with thick concrete walls or dense forests in rural areas can physically block signals, requiring higher power consumption to maintain a connection.

2. Electromagnetic Interference (EMI)

Since most IoT systems rely on wireless communication, the "invisible" environment is often the most challenging.

Spectrum Overcrowding: In smart homes or offices, dozens of devices often compete for the same 2.4 GHz or 5 GHz frequencies. This leads to packet loss and high latency.

Signal Noise: Industrial environments with heavy machinery, motors, or power lines generate significant electromagnetic noise, which can "drown out" the low-power signals typical of IoT sensors.

3. Dynamic vs. Static Environments

The stability of the surroundings determines how often a system must "re-learn" its network path.

Mobility: In systems involving connected vehicles or wearable health trackers, the environment is constantly changing. This requires frequent "handing off" between network gateways, which consumes significant energy.

Static Layouts: In a fixed smart factory, the environment is predictable, allowing for optimized "sleep cycles" for devices to save battery.

© Ramit Pariyar

4. Connectivity and Bandwidth Constraints

The digital environment—specifically the available infrastructure—limits how much data a system can handle.

Latency-Sensitive Environments: In applications like remote surgery or autonomous driving, the network environment must provide near-instant feedback. High latency in these environments can render the entire system useless.

Intermittent Connectivity: In remote environmental monitoring, devices may only have a connection window for a few minutes a day (e.g., via satellite). The system must be designed to store data locally and transmit in bursts.

5. Security Environment

The "threat landscape" is a critical environmental characteristic.

Physical Accessibility: If a sensor is placed in a public park, it is at higher risk of physical tampering or theft compared to a sensor inside a locked data center.

Network Exposure: Devices operating on public or poorly encrypted networks face a higher volume of "noise" from unauthorized access attempts, which can drain resources even if the attacks are unsuccessful.

What are the key technologies that enable the functioning of IoT systems

To function effectively, an IoT system relies on a stack of technologies that allow it to "feel" the world, talk to other systems, and "think" about the data it collects.

As of 2026, these enabling technologies have evolved from simple data collection tools into integrated systems capable of autonomous action.

1. Sensing and Actuation (The "Hardware" Core)

These are the foundational technologies that bridge the physical and digital worlds.

Smart Sensors: Modern sensors (MEMS) go beyond simple readings. They now include high-resolution cameras, solid-state LiDAR for 3D mapping, and biosensors for health monitoring.

Actuators: These receive digital commands and convert them into physical motion, such as opening a smart valve, moving a robotic arm, or adjusting a thermostat.

Low-Power Microcontrollers (MCUs): Specialized chips like the STM32 or ARM Cortex series act as the "brain" of the device, managing tasks with minimal energy consumption.

© Ramit Pariyar

2. Connectivity Protocols (The "Communication" Backbone)

Connectivity technologies determine how far data can travel and how much power the device uses to send it.

Short-Range: Wi-Fi 7 and **Bluetooth Low Energy (BLE)** are used for high-speed data transfer in homes or offices.

Long-Range (LPWAN): Technologies like **LoRaWAN** and **NB-IoT** allow devices to send small amounts of data over kilometers while lasting years on a single battery.

Cellular: 5G-Advanced provides the "Ultra-Low Latency" required for mission-critical tasks like autonomous driving or remote surgery.

3. Edge and Cloud Computing (The "Muscle" and "Brain")

These technologies provide the computational power to handle the massive volume of data generated by sensors.

Edge Computing: Instead of sending all data to a far-away server, processing happens on the device or a nearby gateway. This reduces latency and saves bandwidth.

Cloud Computing: Platforms like AWS, Google Cloud, or Azure provide the massive storage and high-level processing power needed for long-term data history and global system management.

4. Artificial Intelligence and Machine Learning (AIoT)

By 2026, IoT has largely transitioned into **AIoT** (Artificial Intelligence of Things), where data is not just stored but interpreted.

Physical AI: Multimodal AI models allow devices to understand vision and language simultaneously, enabling robots to navigate complex environments autonomously.

Predictive Analytics: Algorithms analyze sensor patterns to predict when a machine will fail *before* it happens (Predictive Maintenance).

Computer Vision: Cameras are now treated as "intelligent sensors" that can recognize faces, detect safety gear violations, or monitor crop health in real-time.

5. Cybersecurity and Blockchain (The "Trust" Layer)

As systems become more autonomous, securing the data flow is critical.

Zero-Trust Architecture: A security model where every device must be continuously verified, regardless of whether it's inside a "private" network.

© Ramit Pariyar

Encryption: Standardized AES-128 or post-quantum cryptographic solutions protect data from being intercepted.

Digital Twins: Virtual models of physical systems that use real-time IoT data to simulate "what-if" scenarios safely in a digital environment.

Different between M2M and WSN. List respective protocols

Differences Between M2M and WSN

Feature	M2M (Machine-to-Machine)	WSN (Wireless Sensor Network)
Primary Goal	Automation and remote monitoring of devices.	Environmental sensing and data collection.
Communication	Usually Point-to-Point (P2P).	Usually Mesh or Multi-hop (many-to-one).
Network Type	Uses existing cellular (4G/5G) or wired networks.	Uses specialized low-power wireless networks.
Power Supply	Often connected to a power source (e.g., ATM, Smart Meter).	Often battery-operated (e.g., forest fire sensors).
Data Type	Specific commands or status reports (Binary/Text).	Continuous or event-triggered environmental data.
Device Intelligence	Higher (embedded modules, SIM cards).	Lower (simple nodes with sensors).

Respective Protocols

The protocols used in these systems are optimized for their specific communication needs—M2M often targets reliability and wide coverage, while WSN targets power efficiency.

M2M Protocols

M2M frequently leverages cellular and internet-standard protocols to ensure devices can talk over long distances.

MQTT (Message Queuing Telemetry Transport): A lightweight messaging protocol ideal for low-bandwidth, high-latency environments.

HTTP/HTTPS: Common for web-integrated M2M devices that need to send data to a cloud server.

LWM2M (Lightweight M2M): Designed specifically for remote management of resource-constrained devices.

Cellular Protocols: Includes **NB-IoT**, **LTE-M**, and standard **5G** for global connectivity.

© Ramit Pariyar

WSN Protocols

WSN protocols are designed to keep sensor nodes alive for years while maintaining a stable "mesh" of connections.

Zigbee (IEEE 802.15.4): The most common protocol for low-power, short-range mesh networking.

6LoWPAN: Allows IPv6 packets to be transmitted over low-power wireless personal area networks.

WirelessHART: A secure, robust protocol widely used in industrial process automation.

Z-Wave: Popular in smart home sensor networks for its low interference and high reliability.

LoRaWAN: Used in wide-area sensor networks (like smart agriculture) for long-range communication.

Explain python programming language. Why it is good programming language for raspberry pi?

Python is a high-level, interpreted programming language known for its clear syntax and readability. Developed by Guido van Rossum and released in 1991, its design philosophy emphasizes code readability, often allowing programmers to express concepts in fewer lines of code than would be possible in languages such as C++ or Java.

What Makes Python Unique?

Interpreted Language: Python code is executed line-by-line, which makes debugging much faster and eliminates the need for a complex "compilation" step before running a program.

Simple Syntax: It uses English-like keywords and relies on indentation (whitespace) to define code blocks, making it very accessible for beginners.

Batteries Included: Python comes with a large standard library that supports many common programming tasks, such as connecting to web servers, reading and modifying files, and working with data.

Versatility: It is used globally for web development, data science, artificial intelligence, automation, and education.

© Ramit Pariyar

Why Python is Ideal for Raspberry Pi

The Raspberry Pi was actually named with Python in mind (the "Py" in Pi stands for Python). While the Pi supports many languages, Python remains the "official" language of the platform for several key reasons:

1. Simple GPIO Interaction

The most powerful feature of a Raspberry Pi is its **GPIO (General Purpose Input/Output) pins**, which allow it to control physical hardware. Python has mature, easy-to-use libraries like RPi.GPIO and gpiozero.

With just 3 or 4 lines of Python code, you can make an LED blink or read a button press, whereas doing the same in C would require much more complex code.

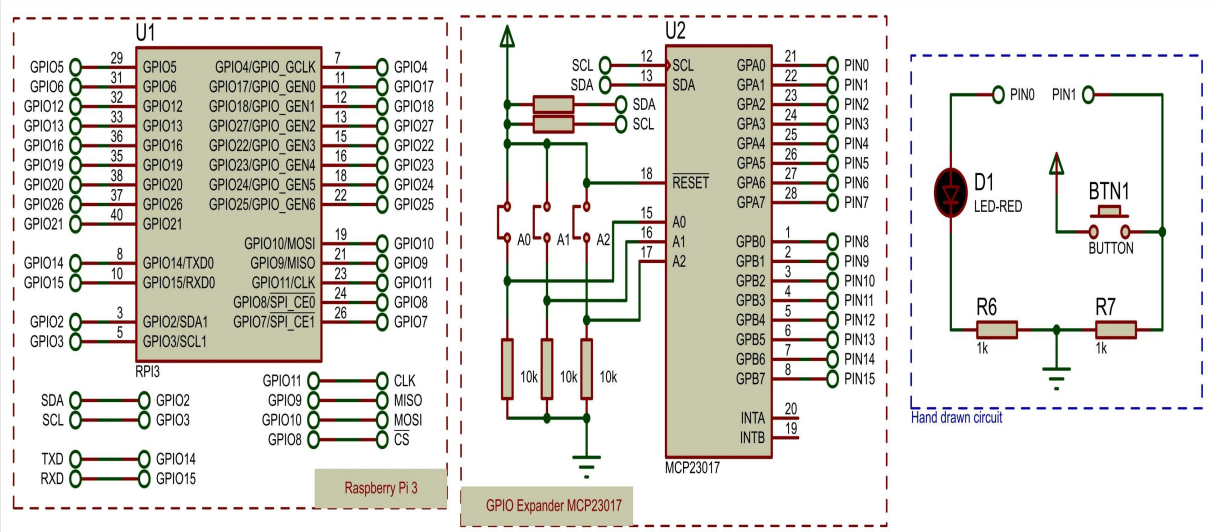

Shutterstock

2. Pre-installed and Optimized

The Raspberry Pi OS (formerly Raspbian) comes with Python pre-installed along with several Integrated Development Environments (IDEs) like **Thonny**, which are designed specifically to help users write Python on the Pi.

3. Huge Community & Library Support

Because Python is the standard for the Pi, almost every sensor, HAT (Hardware Attached on Top), or peripheral comes with a Python library. If you are building a weather station or a face-recognition camera, someone has likely already written the Python code to make it work.

© Ramit Pariyar

4. Balance of Performance and Ease

While Python is slower than "low-level" languages like C, the Raspberry Pi's processor is powerful enough to handle Python for most DIY projects. It provides a perfect middle ground: it's fast enough for real-time sensor monitoring but easy enough that you don't need a degree in Computer Science to use it.

What is the key components of an IoT security model.

To secure an IoT ecosystem, a "defense-in-depth" approach is required. Because IoT systems span from physical hardware in the field to cloud servers in data centers, security must be integrated into every layer rather than added as an afterthought.

The key components of a robust IoT security model include:

1. Device Identity and Authentication

Every device in the network must have a unique, verifiable identity. This ensures that only "trusted" devices can communicate with your servers.

Hardware Root of Trust: Using a dedicated secure chip (like a TPM or Secure Element) to store cryptographic keys so they cannot be extracted physically.

Mutual Authentication: Ensuring the device proves its identity to the server, and the server proves its identity to the device before any data is exchanged.

2. Secure Communication (Encryption)

Data must be protected while it is "in flight" between the device and the gateway or cloud.

Transport Layer Security (TLS): Encrypting the communication channel (similar to HTTPS for websites) to prevent "Man-in-the-Middle" attacks.

End-to-End Encryption: Ensuring that data remains encrypted from the moment it is sensed until it reaches the authorized user's application.

3. Data Integrity and Validation

This component ensures that the data has not been tampered with or altered during transmission.

Digital Signatures: Using hashing and certificates to verify that the message received is exactly what the device sent.

Firmware Validation: Using "Secure Boot" to ensure that the device only runs authorized software signed by the manufacturer.

© Ramit Pariyar

4. Secure Boot and Over-the-Air (OTA) Updates

Security is not a one-time setup; it is a continuous process.

Secure Boot: The device checks for a digital signature every time it starts up. If the software has been modified by a hacker, the device refuses to boot.

Patch Management (OTA): The ability to remotely push security updates to thousands of devices at once to fix newly discovered vulnerabilities.

5. Monitoring and Analytics (Detection)

Since no system is 100% unhackable, you need tools to detect when a breach is happening.

Intrusion Detection Systems (IDS): Monitoring network traffic for unusual patterns (e.g., a temperature sensor suddenly trying to access a website).

Anomaly Detection: Using AI to recognize when a device is behaving strangely, such as sending data at 3:00 AM when it usually only sends data at noon.

6. Physical Security

Because IoT devices are often placed in public or outdoor spaces, they are vulnerable to physical tampering.

Tamper Resistance: Designing hardware that erases its internal memory if the casing is forced open.

Port Protection: Disabling physical ports (like USB or JTAG) that are only needed during the manufacturing phase.

What are the role of data analytics in IoT applications? How does data analysis enhance functionality and efficiency in IoT system

Data analytics serves as the "brain" of an IoT (Internet of Things) system. While the sensors and devices act as the nervous system—collecting data from the physical world—it is analytics that converts those raw electrical signals into actionable intelligence.

Without data analytics, IoT is simply a collection of connected devices; with it, it becomes a smart ecosystem.

1. The Role of Data Analytics in IoT

The integration of analytics into IoT happens across several stages, each serving a specific purpose:

© Ramit Pariyar

Real-time Processing: Analytics tools process data streams instantly as they arrive from sensors (e.g., detecting a sudden spike in pressure in an industrial pipe).

Predictive Modeling: By looking at historical data, analytics can predict future states, such as when a machine part is likely to fail (**Predictive Maintenance**).

Data Volume Management: IoT generates massive amounts of data. Analytics helps filter out "noise" (unimportant data) and focuses only on significant changes or anomalies.

Pattern Recognition: Identifying trends over time, such as peak energy usage hours in a smart building or traffic flow patterns in a smart city.

2. Enhancing Functionality and Efficiency

Data analysis transforms how an IoT system operates, moving it from a reactive state to a proactive one.

A. Improved Operational Efficiency

Analytics identifies bottlenecks in real-time. For example, in a smart warehouse, analyzing the movement of automated guided vehicles (AGVs) allows the system to optimize routes, reducing battery consumption and speeding up delivery times.

B. Predictive Maintenance

In traditional systems, machines are fixed when they break. In an IoT system backed by analytics, the data identifies wear-and-tear patterns.

Impact: This prevents costly downtime and extends the lifespan of the equipment by performing maintenance only when necessary.

C. Resource Optimization

In Smart Agriculture or Smart Homes, analytics ensures resources are not wasted.

Example: Soil moisture sensors collect data, but analytics determines the *exact* amount of water needed based on weather forecasts and crop type, significantly reducing water waste.

D. Enhanced User Experience and Automation

Analytics allows IoT systems to learn user preferences. A smart thermostat doesn't just follow a schedule; it analyzes when you are home and what temperatures you prefer during different seasons, eventually automating the climate control without manual input.

© Ramit Pariyar

Describe the role of APIS in IoT

In an IoT ecosystem, **APIs (Application Programming Interfaces)** act as the "universal translator" and the "digital glue" that allows different hardware, software, and cloud services to talk to each other.

Without APIs, an IoT device would be an isolated island, unable to share its data or receive commands from other systems.

1. The Core Roles of APIs in IoT

A. Connectivity and Communication

IoT involves a massive variety of manufacturers and protocols. APIs bridge the gap between different languages. For example, an API can take data from a sensor using **MQTT** and translate it into a format that a web-based dashboard using **HTTP** can understand.

B. Data Exposure and Sharing

The primary job of an IoT sensor is to collect data (temperature, motion, location). APIs provide a secure "doorway" for other applications to request that data.

Example: A weather app uses an API to pull real-time temperature data from thousands of connected weather stations worldwide.

C. Device Management and Control

APIs are not just for reading data; they are for sending commands. When you press "Turn on Light" on your smartphone, the app sends a request to an API, which then sends the physical instruction to the smart bulb.

D. Integration with Third-Party Services

APIs allow IoT systems to become "smarter" by connecting to external data.

Smart Irrigation: An IoT controller can use a **Weather API** to check if it's going to rain today. If the API says "Yes," the controller decides not to water the plants, saving water.

2. How APIs Enable the IoT Layers

IoT is generally divided into layers, and APIs facilitate the flow between them:

Device Layer: Microcontrollers (like ESP32 or Arduino) use APIs to send sensor data to the gateway.

Network/Gateway Layer: APIs aggregate data from multiple devices and push it to the cloud.

© Ramit Pariyar

Application Layer: This is where the user interacts. APIs allow mobile apps or web consoles to display the data in a human-readable format.

Write short notes

1. RFID Technology

Radio Frequency Identification (RFID) is a wireless communication technology that uses radio waves to identify and track objects, animals, or people automatically. Unlike barcoding, RFID does not require a direct line of sight or physical contact to read data.

1. Key Components of an RFID System

An RFID system consists of three primary elements:

RFID Tag (Transponder): A small chip connected to an antenna. It stores a unique identification number or data about the object.

RFID Reader (Interrogator): A device that emits radio signals and receives data back from the tags.

Middleware/Database: Software that processes the information collected by the reader and connects it to a computer system or network.

2. How It Works

The Reader transmits radio signals through its antenna.

When a Tag comes within range, it picks up these signals.

The Tag transmits its stored data (such as a serial number) back to the Reader.

The Reader converts these radio waves into digital data, which is then sent to a computer for processing.

2. Satellite Technology

Satellite Technology refers to the use of artificial objects (satellites) placed into orbit around the Earth or other celestial bodies to relay information, capture images, or provide positioning data. It is a cornerstone of modern telecommunications, weather forecasting, and global navigation.

1. Core Components of a Satellite System

A satellite system is generally divided into two main segments:

© Ramit Pariyar

Space Segment: The actual satellite in orbit, which consists of a "bus" (the physical structure, power, and thrusters) and the "payload" (the specific equipment like cameras or transponders).

Ground Segment: The earth stations, antennas, and control centers that send signals to the satellite (**Uplink**) and receive data from it (**Downlink**).

2. How Satellite Communication Works

Uplink: A ground station sends a high-frequency signal to the satellite.

Transponding: The satellite receives the signal, amplifies it, and changes its frequency to avoid interference.

Downlink: The satellite beams the signal back down to a specific area on Earth (the "footprint").

3. Major Applications

Communication: Providing internet and phone services to remote areas where cables cannot reach.

Navigation (GPS): Satellites provide precise time and location data used by smartphones, cars, and airplanes.

Weather Forecasting: Continuous monitoring of cloud patterns, ocean currents, and atmospheric changes to predict storms and climate shifts.

Earth Observation: High-resolution mapping for urban planning, agriculture (crop health), and disaster management (monitoring forest fires or floods).

3. Vulnerability of IoT

Vulnerability of IoT (Internet of Things) refers to the weaknesses or gaps in an IoT ecosystem that can be exploited by cybercriminals to gain unauthorized access, steal data, or disrupt services. Because IoT devices often lack the processing power for robust security, they are frequently the "weakest link" in a network.

1. Why are IoT Systems Vulnerable?

Limited Resources: Many devices (like smart bulbs or sensors) have very little RAM and CPU power, making it impossible to run traditional antivirus or complex encryption.

Lack of User Interface: Most IoT devices don't have a screen, so users often don't know if a device is compromised or needs a security update.

Insecure Defaults: Many manufacturers ship devices with universal default passwords (like admin or 1234) that users rarely change.

© Ramit Pariyar

Always Connected: Since these devices are online 24/7, they provide a constant "entry point" for hackers to scan and attack.

2. Types of Attacks Exploiting Vulnerabilities

Botnets & DDoS: Hackers take over thousands of weak IoT devices to create a "Botnet" (like the **Mirai botnet**). They use this collective power to crash websites by flooding them with traffic.

Man-in-the-Middle (MitM): An attacker intercepts the communication between an IoT device and the cloud to steal data or send fake commands.

Data & Privacy Leaks: Vulnerable smart home devices (like microphones or cameras) can be used to spy on individuals, leading to serious privacy violations.

Ransomware: In industrial settings, hackers might lock a smart factory's control system and demand money to release it.

4 . IoT Devices

oT Devices are the physical hardware components that form the foundation of the Internet of Things. These devices are "smart" because they are equipped with sensors, software, and connectivity, allowing them to collect data from their environment and communicate it to other devices or central systems over the internet.

1. Key Characteristics of IoT Devices

To be considered an IoT device, a piece of hardware typically needs:

Sensors/Actuators: To "feel" the world (sensors like temperature, motion, or light) or "act" upon it (actuators like motors or switches).

Connectivity: A way to talk to the network (via Wi-Fi, Bluetooth, Zigbee, Cellular, or LoRaWAN).

Processor: A small "brain" (like a microcontroller or SoC) to process data locally before sending it.

Unique Identity: An IP address or a unique ID to be identified on a network.

2 How an IoT Device Functions

The operation of an IoT device generally follows a four-step cycle:

Sensing: The device collects raw data (e.g., a moisture sensor detects dry soil).

Processing: The internal microcontroller decides if the data is important (e.g., "Is the moisture level below 20%?").

© Ramit Pariyar

Communication: The device sends this data to a gateway or the cloud via an **API**.

Action: A command is sent back to the device to perform a task (e.g., "Turn on the water pump").

3 Popular Hardware Platforms for Development

If you are building your own IoT device (common in Computer Engineering projects), you likely use these:

ESP32 / ESP8266: Popular for built-in Wi-Fi and Bluetooth at a low cost.

Arduino: Great for simple sensor-based prototypes.

Raspberry Pi: A full computer used for complex IoT gateways or edge computing.

© Ramit Pariyar