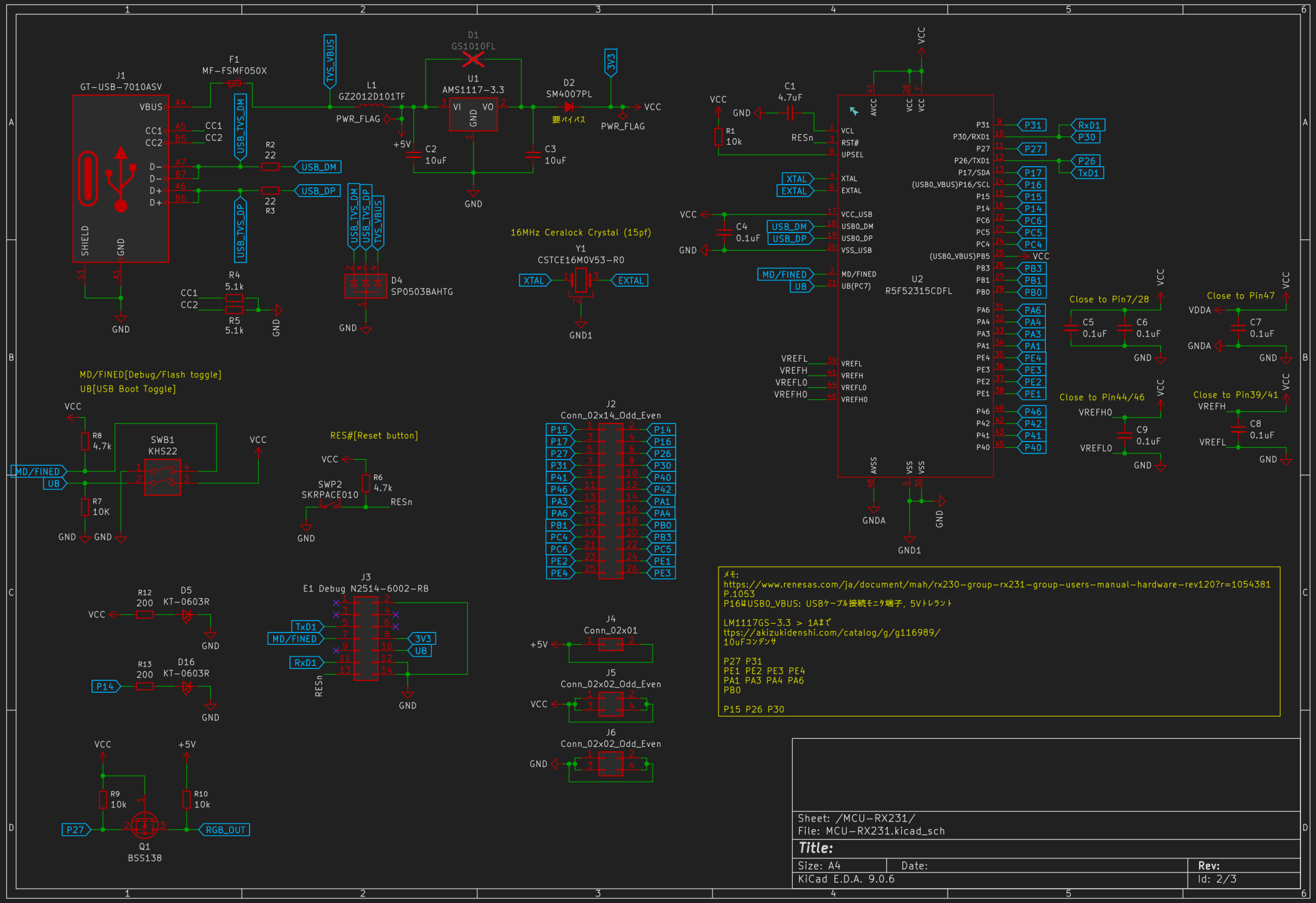
J1
GT-USB-7010ASV
VBUS
CC1
CC2
D-
D-
D+
D+
SHIELD
GND
F1
MF-FSMF050X
USB_TVS_DM
USB_TVS_DP
R2
22
R3
22
USB_DM
USB_DP
R4
5.1k
R5
5.1k
CC1
CC2
TVS_VBUS
L1
GZ2012D101TF
PWR_FLAG
D1
GS1010FL
U1
AMS1117-3.3
VI
VO
GND
+5V
C2
10uF
C3
10uF
D2
SM4007PL
要バイパス
3V3
PWR_FLAG
VCC
D4
SP0503BAHTG
16MHz Ceralock Crystal (15pf)
Y1
CSTCE16M0V53-R0
XTAL
EXTAL
GND1
C1
4.7uF
R1
10k
RESn
VCL
RST#
UPSEL
XTAL
EXTAL
VCC_USB
USB0_DM
USB0_DP
VSS_USB
C4
0.1uF
MD/FINED
UB(PC7)
U2
R5F52315CDFL
VREFL
VREFH
VREFL0
VREFH0
AVCC
AVSS
VSS
GNDA
P31
P30/RXD1
P27
P26/TXD1
P17/SDA
(USB0_VBUS)P16/SCL
P15
P14
PC6
PC5
PC4
(USB0_VBUS)PB5
PB3
PB1
PB0
PA6
PA4
PA3
PA1
PE4
PE3
PE2
PE1
P46
P42
P41
P40
RxD1
TxD1
Close to Pin7/28
C5
0.1uF
C6
0.1uF
Close to Pin47
VDDA
GNDA
C7
0.1uF
Close to Pin44/46
C9
0.1uF
Close to Pin39/41
C8
0.1uF
MD/FINED[Debug/Flash toggle]
UB[USB Boot Toggle]
R8
4.7k
SWB1
KHS22
R7
10K
RES#[Reset button]
SWP2
SKRPACE010
R6
4.7k
J2
Conn_02x14_Odd_Even
P15
P17
P27
P31
P41
P46
PA3
PA6
PB1
PC4
PC6
PE2
PE4
P14
P16
P26
P30
P40
P42
PA1
PA4
PB0
PB3
PC5
PE1
PE3
R12
200
D5
KT-0603R
R13
200
D16
KT-0603R
P14
J3
E1 Debug N2514-6002-RB
TxD1
MD/FINED
RxD1
RESn
3V3
UB
J4
Conn_02x01
J5
Conn_02x02_Odd_Even
J6
Conn_02x02_Odd_Even
R9
10k
R10
10k
P27
RGB_OUT
Q1
BSS138
メモ:
https://www.renesas.com/ja/document/mah/rx230-group-rx231-group-users-manual-hardware-rev120?r=1054381
P.1053
P16はUSB0_VBUS: USBケーブル接続モニタ端子, 5Vトレラント
LM1117GS-3.3 > 1Aまで
ttps://akizukidenshi.com/catalog/g/g116989/
10uFコンデンサ
P27 P31
PE1 PE2 PE3 PE4
PA1 PA3 PA4 PA6
PB0
P15 P26 P30
Sheet: /MCU-RX231/
File: MCU-RX231.kicad_sch
Title:
Size: A4
Date:
Rev:
KiCad E.D.A. 9.0.6
Id: 2/3

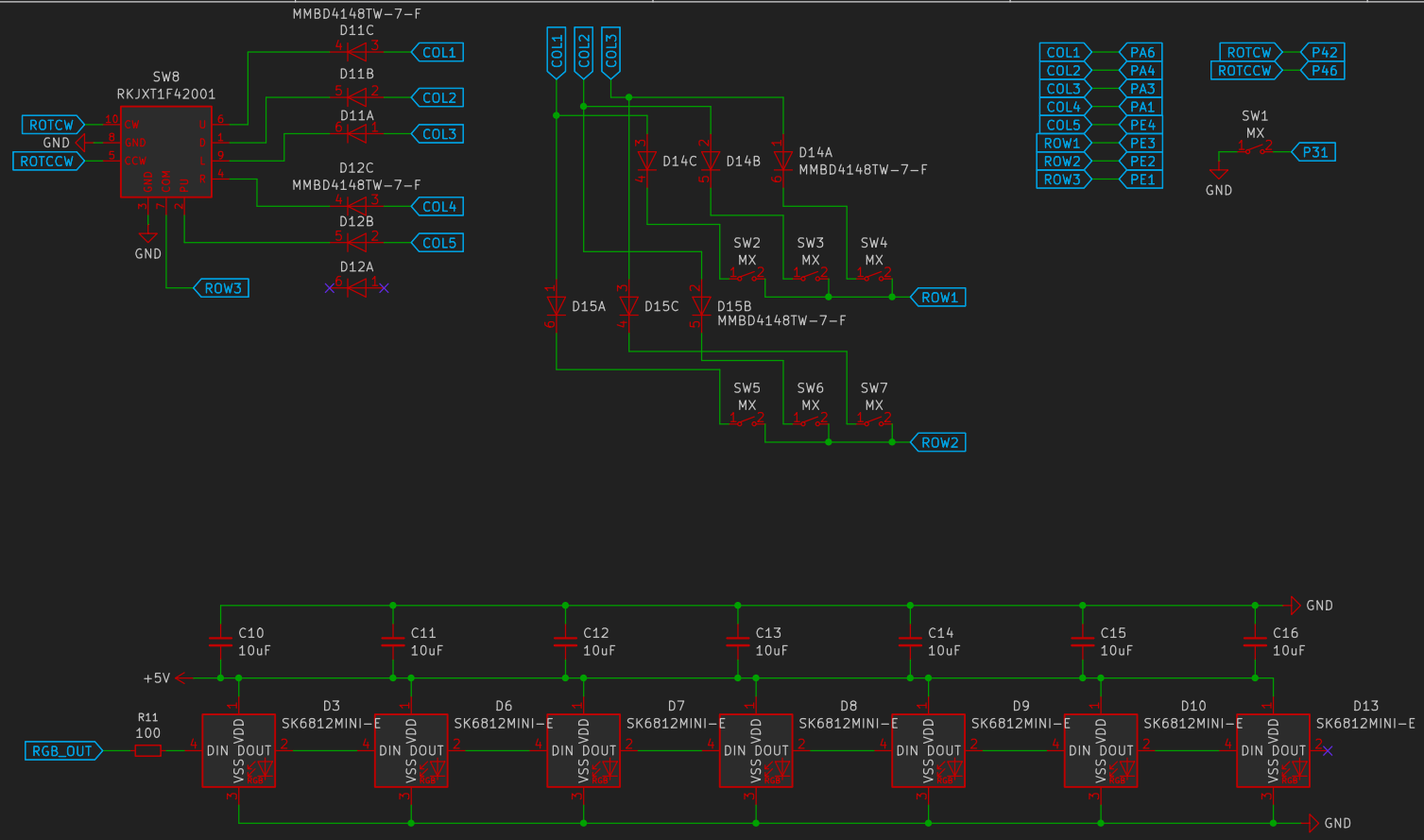

Sheet: /Switches/
File: untitled.kicad_sch

Title:

Size: A4	Date:	Rev:
KiCad E.D.A. 9.0.6		Id: 3/3