Chapter 3: Introduction to SQL

Edited by Radhika Sukapuram. Original slides by

Database System Concepts, 6th Ed.

Test for Empty Relations

- The **exists** construct returns the value **true** if the argument subquery is nonempty.
- **exists** $r \Leftrightarrow r \neq \emptyset$
- **not exists** $r \Leftrightarrow r = \emptyset$

Set Operations

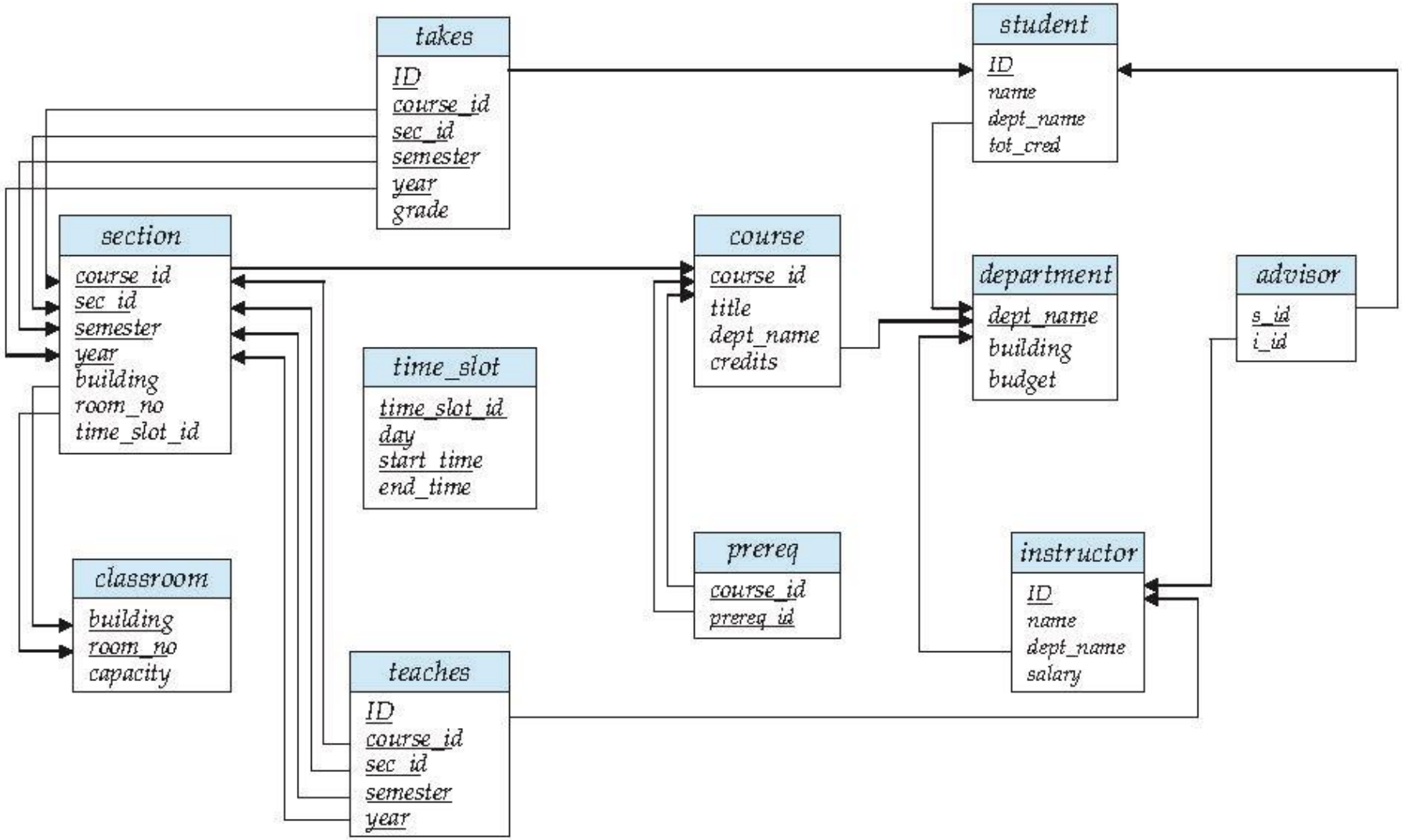

Use of "exists" Clause

- Yet another way of specifying the query "Find all courses taught in both the Fall 2009 semester and in the Spring 2010 semester"

```
select course_id
from section as S
where semester = 'Fall' and year = 2009 and
        exists (select *
                from section as T
                where semester = 'Spring' and year= 2010
                        and S.course_id = T.course_id);
```

- Evaluate **from** clause of outer query, then predicate of outer **where** clause (partially), then select *course_id* of that tuple
- Evaluate inner query using the *course_id (*that is, *S.course_id)*
- Do the same for all tuples of the outer query

- **Correlation name** – variable S in the outer query
- **Correlated subquery** – the inner query
- Scoping rules

Use of “not exists” Clause

- Find all students who have taken all courses offered in the Biology department.

Use of "not exists" Clause

- Find all students who have taken all courses offered in the Biology department.

```
select distinct S.ID, S.name
from student as S
where not exists ( (select course_id
                    from course
                    where dept_name = 'Biology')
                   except
                    (select T.course_id
                     from takes as T
                     where S.ID = T.ID));
```

12, 13, 14

12, 13, 14, 15

- First nested query lists all courses offered in Biology
- Second nested query lists all courses a particular student took

- Note that $X - Y = \emptyset \quad \Leftrightarrow \quad X \subseteq Y$

Test for Absence of Duplicate Tuples

- The **unique** construct tests whether a subquery has any duplicate tuples in its result.
- The **unique** construct evaluates to “true” if a given subquery contains no duplicates .
- Find all courses that were offered at most once in 2009

```
select T.course_id
from course as T
where unique (select R.course_id
              from section as R
              where T.course_id= R.course_id
                    and R.year = 2009);
```

Note: If no course is offered in 2009, the subquery returns an empty set and unique returns true

Note: Check in latest MYSQL

Subqueries in the From Clause

Subqueries in the From Clause

- SQL allows a subquery expression to be used in the **from** clause
- Find the average instructors' salaries of those departments where the average salary is greater than $42,000."

```
select dept_name, avg_salary
 from (select dept_name, avg (salary) as avg_salary
        from instructor
        group by dept_name) as inst
 where avg_salary > 42000;
```

- Note that we do not need to use the **having** clause

With Clause

- The **with** clause provides a way of defining a temporary relation whose definition is available only to the query in which the **with** clause occurs.
- Find all departments with the maximum budget

```
with max_budget (value) as
        (select max(budget)
         from department)
select department.name
from department, max_budget
where department.budget = max_budget.value;
```

- Note: Check in latest MYSQL.

Complex Queries using With Clause

- Find all departments where the total salary is greater than the average of the total salary at all departments

```
with dept _total (dept_name, value) as
        (select dept_name, sum(salary)
         from instructor
         group by dept_name),
dept_total_avg(value) as
       (select avg(value)
       from dept_total)
select dept_name
from dept_total, dept_total_avg
where dept_total.value > dept_total_avg.value;
```

Note: Check in latest MYSQL.

Subqueries in the Select Clause

Scalar Subquery

- Scalar subquery is one which is used where a single value is expected
- List all departments along with the number of instructors in each department

Extracts attribute from relation

```
select dept_name,
        (select count(*)
           from instructor
          where department.dept_name = instructor.dept_name)
        as num_instructors
from department;
```

- Runtime error if subquery returns more than one result tuple
- Scalar subquery possible in **select**, **where** and **having** clauses

Modification of the Database

- Deletion of tuples from a given relation.
- Insertion of new tuples into a given relation
- Updating of values in some tuples in a given relation

Deletion

- Delete all instructors

  delete from *instructor*

- Delete all instructors from the Finance department

  delete from *instructor*
  where *dept_name*= ’Finance’;

- Delete all tuples in the *instructor* relation for those instructors associated with a department located in the Watson building.

  delete from *instructor*
  where *dept_name* **in** (**select** *dept_name*
  from *department*
  where *building* = ’Watson’);

Deletion (Cont.)

- Delete all instructors whose salary is less than the average salary of instructors

  delete from *instructor*
  where *salary* < (**select avg** (*salary*)
  from *instructor*);

  - Problem: as we delete tuples from deposit, the average salary changes
  - Solution used in SQL:
    1. First, compute **avg** (salary) and find all tuples to delete
    2. Next, delete all tuples found above (without recomputing **avg** or retesting the tuples)

Set Operations

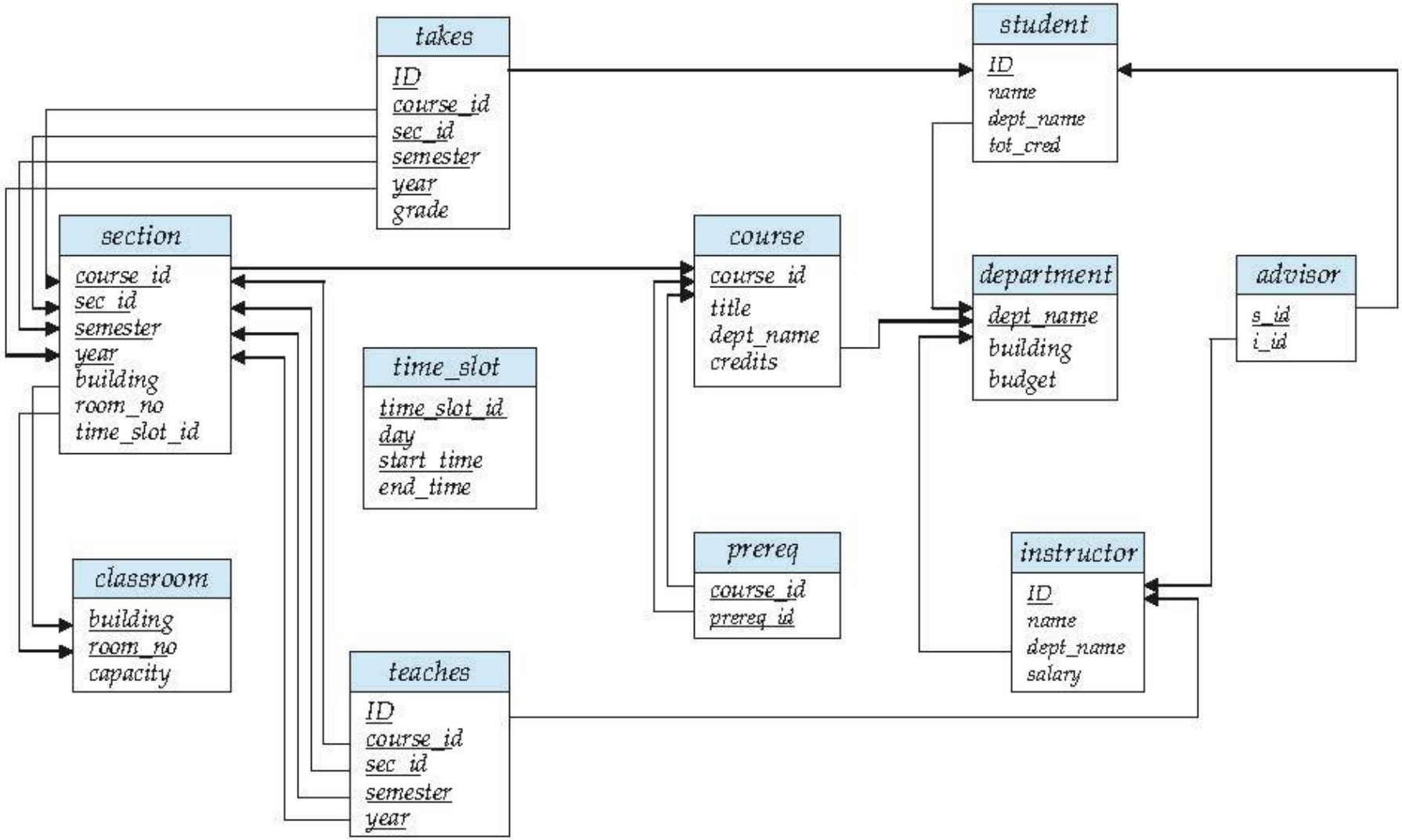

Insertion

- Add a new tuple to *course*

  insert into *course*
  values ('CS-437', 'Database Systems', 'Comp. Sci.', 4);

- or equivalently

  insert into *course* (*course_id*, *title*, *dept_name*, *credits*)
  values ('CS-437', 'Database Systems', 'Comp. Sci.', 4);

- Add a new tuple to *student* with *tot_creds* set to null

  insert into *student*
  values ('3003', 'Green', 'Finance', *null*);

Insertion (Cont.)

- Add all instructors to the *student* relation with tot_creds set to 0

  insert into *student*
  select *ID, name, dept_name, 0*
  from *instructor*

- The **select from where** statement is evaluated fully before any of its results are inserted into the relation.

  Otherwise queries like

  insert into *table*1 **select** * **from** *table*1

  would cause problems

Updates

- Increase salaries of instructors whose salary is over $100,000 by 3%, and all others by a 5%
  - Write two **update** statements:

```
update instructor
    set salary = salary * 1.03
    where salary > 100000;
update instructor
    set salary = salary * 1.05
    where salary <= 100000;
```

  - The order is important
  - Can be done better using the **case** statement (next slide)

Case Statement for Conditional Updates

- Same query as before but with case statement

```
update instructor
    set salary = case
                    when salary <= 100000 then salary * 1.05
                    else salary * 1.03
                   end
```

Updates with Scalar Subqueries

- Recompute and update tot_creds value for all students

```
update student S
   set tot_cred = (select sum(credits)
                   from takes, course
                   where takes.course_id = course.course_id and
                         S.ID= takes.ID.and
                         takes.grade <> 'F' and
                         takes.grade is not null);
```

- Sets *tot_creds* to null for students who have not taken any course
- Instead of **sum**(*credits*), use:

```
case
   when sum(credits) is not null then sum(credits)
   else 0
end
```

End of Chapter 3

Edited by Radhika Sukapuram. Original slides by

Database System Concepts, 6th Ed.