Input

Fluorescence

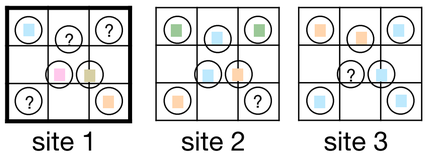

or

Sequencing

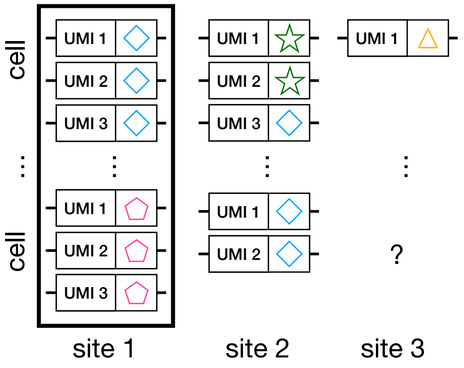

LAML-Pro

maximum likelihood tree inference

$$\max_{T,\Theta} \log L(T, \Theta; \mathbf{D})$$

Probabilistic Mixed-type with Observations (PMMO)

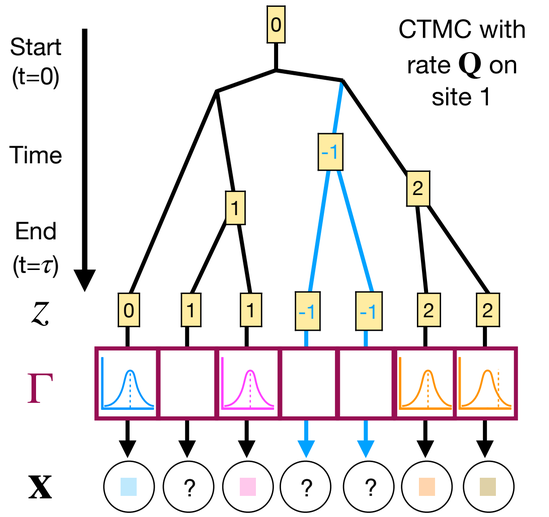

Output

(1) Genotype imputation

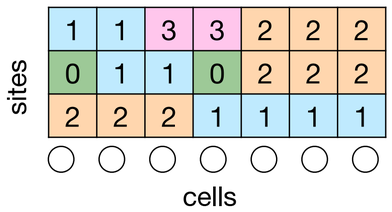

(2) Edit rate, heritable missing rate, and dropout probability
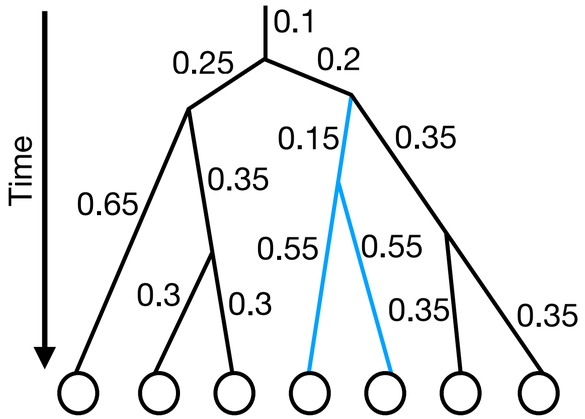
(3) Time-resolved cell lineage tree