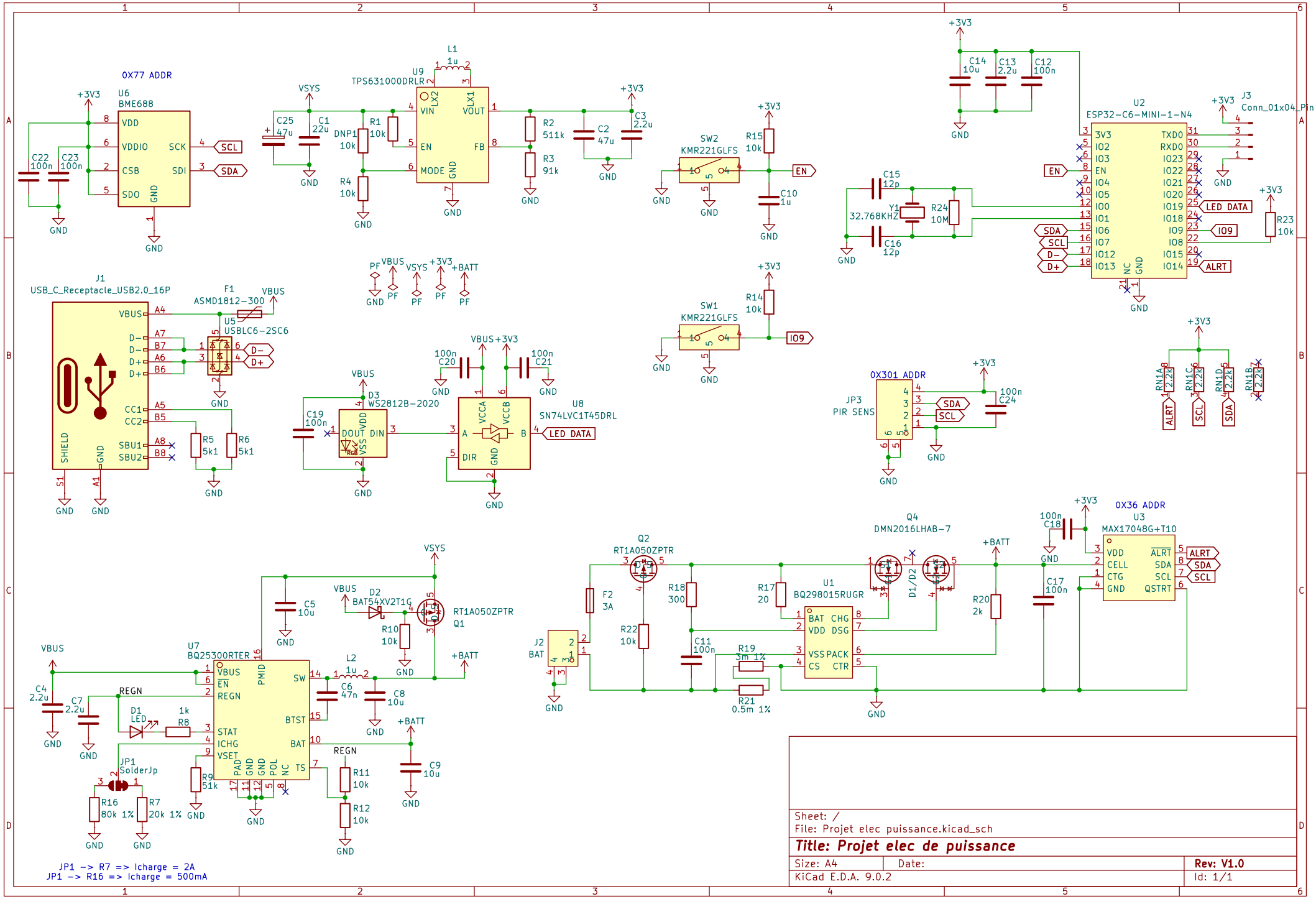
0X77 ADDR
U6
BME688
VDD
VDDIO
CSB
SDO
SCK
SDI
GND
SCL
SDA
C22 100n
C23 100n
+3V3
U9
TPS631000DRLR
L1 1u
VIN
LX2
LX1
VOUT
EN
MODE
FB
VSYS
C25 47u
C1 22u
DNP1 10k
R1 10k
R4 10k
R2 511k
R3 91k
C2 47u
C3 2.2u
SW2
KMR221GLFS
R15 10k
C10 1u
EN
C14 10u
C13 2.2u
C12 100n
U2
ESP32-C6-MINI-1-N4
3V3
IO2
IO3
EN
IO4
IO5
IO0
IO1
IO6
IO7
IO12
IO13
TXD0
RXD0
IO23
IO22
IO21
IO20
IO19
IO18
IO9
IO8
IO15
IO14
NC
LED DATA
ALRT
SDA
SCL
D-
D+
J3
Conn_01x04_Pin
C15 12p
C16 12p
Y1
32.768KHZ
R24 10M
R23 10k
J1
USB_C_Receptacle_USB2.0_16P
VBUS
D-
D+
CC1
CC2
SBU1
SBU2
SHIELD
F1
ASMD1812-300
U5
USBLC6-2SC6
R5 5k1
R6 5k1
PF
VBUS
VSYS
+3V3
+BATT
SW1
KMR221GLFS
R14 10k
IO9
D3
WS2812B-2020
DOUT
DIN
VDD
VSS
C19 100n
C20 100n
C21 100n
U8
SN74LVC1T45DRL
VCCA
VCCB
A
B
DIR
LED DATA
JP3
PIR SENS
0X301 ADDR
C24 100n
RN1A 2.2k
RN1C 2.2k
RN1D 2.2k
RN1B 2.2k
ALRT
SCL
SDA
U7
BQ25300RTER
VBUS
EN
REGN
STAT
ICHG
VSET
PMID
SW
BTST
BAT
TS
PAD
GND
POL
NC
C5 10u
D2
BAT54XV2T1G
R10 10k
RT1A050ZPTR
Q1
L2 1u
C6 47n
C8 10u
C9 10u
C4 2.2u
C7 2.2u
D1
LED
1k
R8
JP1
SolderJp
R16 80k 1%
R7 20k 1%
R9 51k
R11 10k
R12 10k
Q2
RT1A050ZPTR
F2
3A
J2
BAT
R18 300
R22 10k
C11 100n
R17 20
R19 3m 1%
R21 0.5m 1%
U1
BQ298015RUGR
BAT
CHG
VDD
DSG
VSS
PACK
CS
CTR
Q4
DMN2016LHAB-7
D1/D2
R20 2k
C17 100n
C18 100n
0X36 ADDR
U3
MAX17048G+T10
VDD
CELL
CTG
GND
ALRT
SDA
SCL
QSTRT
JP1 -> R7 => Icharge = 2A
JP1 -> R16 => Icharge = 500mA
Sheet: /
File: Projet elec puissance.kicad_sch
Title: Projet elec de puissance
Size: A4
Date:
Rev: V1.0
KiCad E.D.A. 9.0.2
Id: 1/1