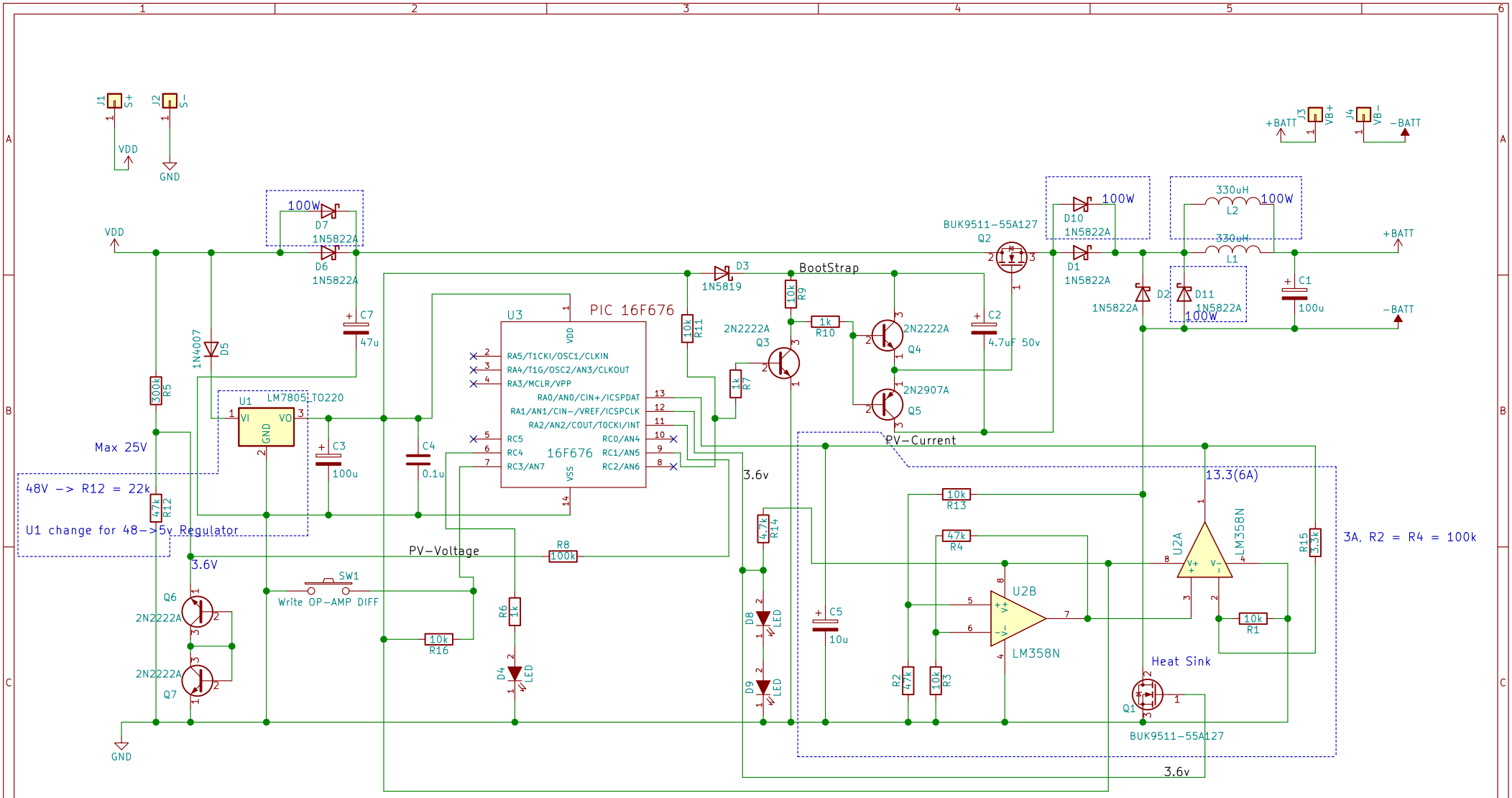

Sheet: /
File: 16F676-mppt.sch

Title: Simple MPPT with 16F676 v1

Size: A4	Date: 2021-07-30	**Rev: 1.83**
KiCad E.D.A. kicad (5.1.9)-1		Id: 1/1