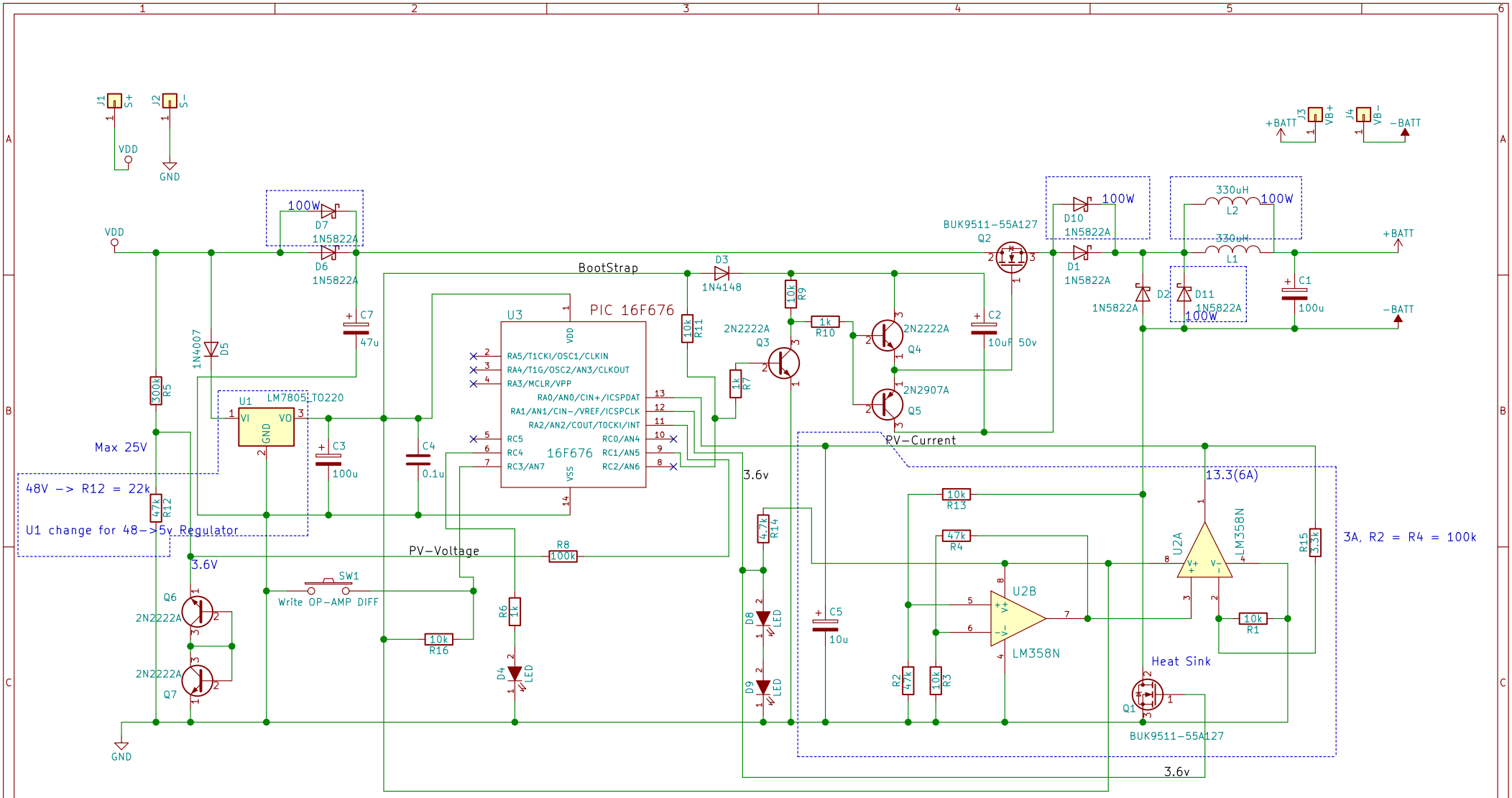

Sheet: /
File: 16F676-mppt.sch

Title: Simple MPPT with 16F676 v1

Size: A4	Date: 2019-02-15	Rev: 1.82
KiCad E.D.A. kicad (5.0.2)-1		Id: 1/1