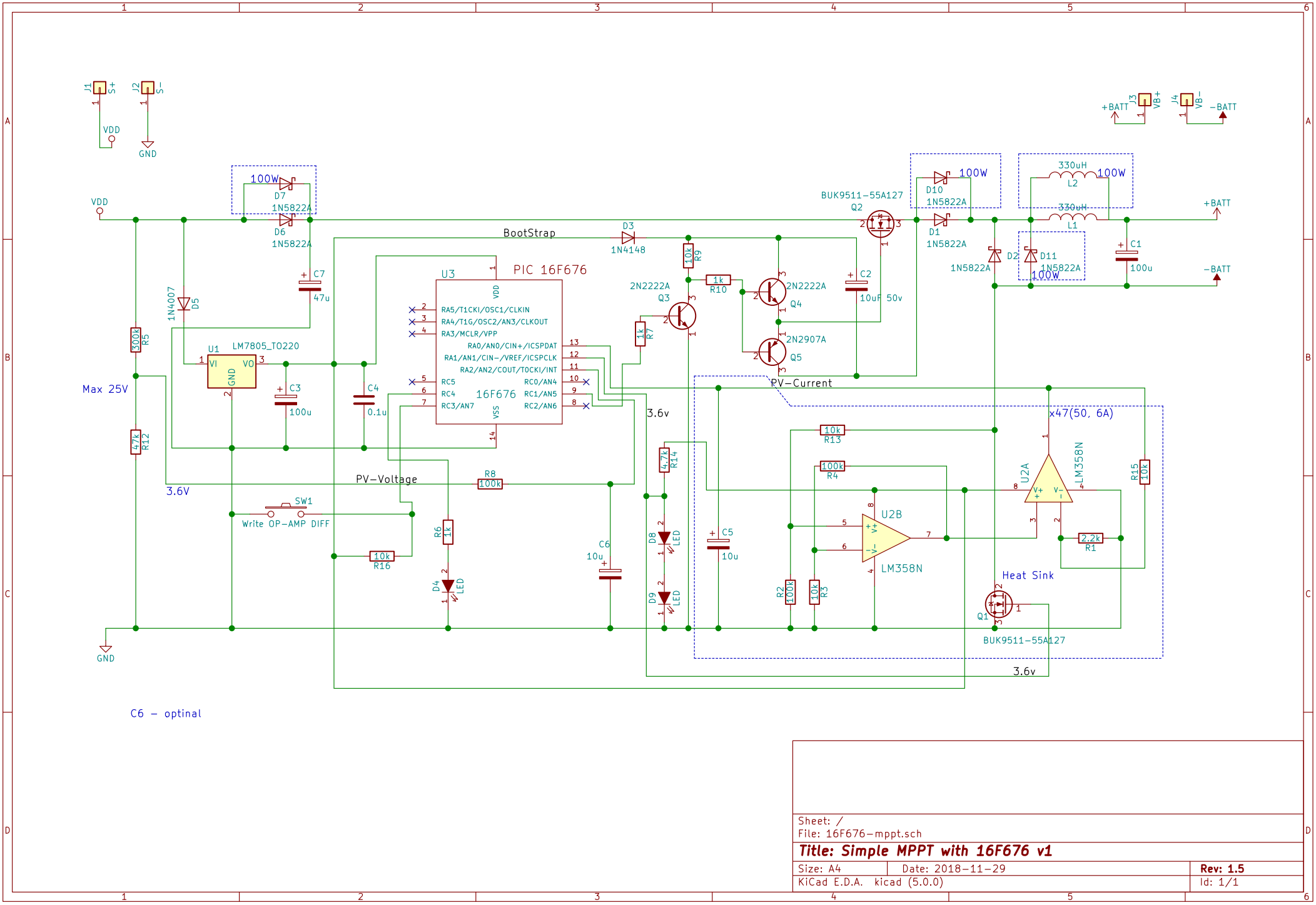

Sheet: /
File: 16F676−mppt.sch

Title: Simple MPPT with 16F676 v1

Size: A4	Date: 2018−11−29	**Rev: 1.5**
KiCad E.D.A. kicad (5.0.0)		Id: 1/1