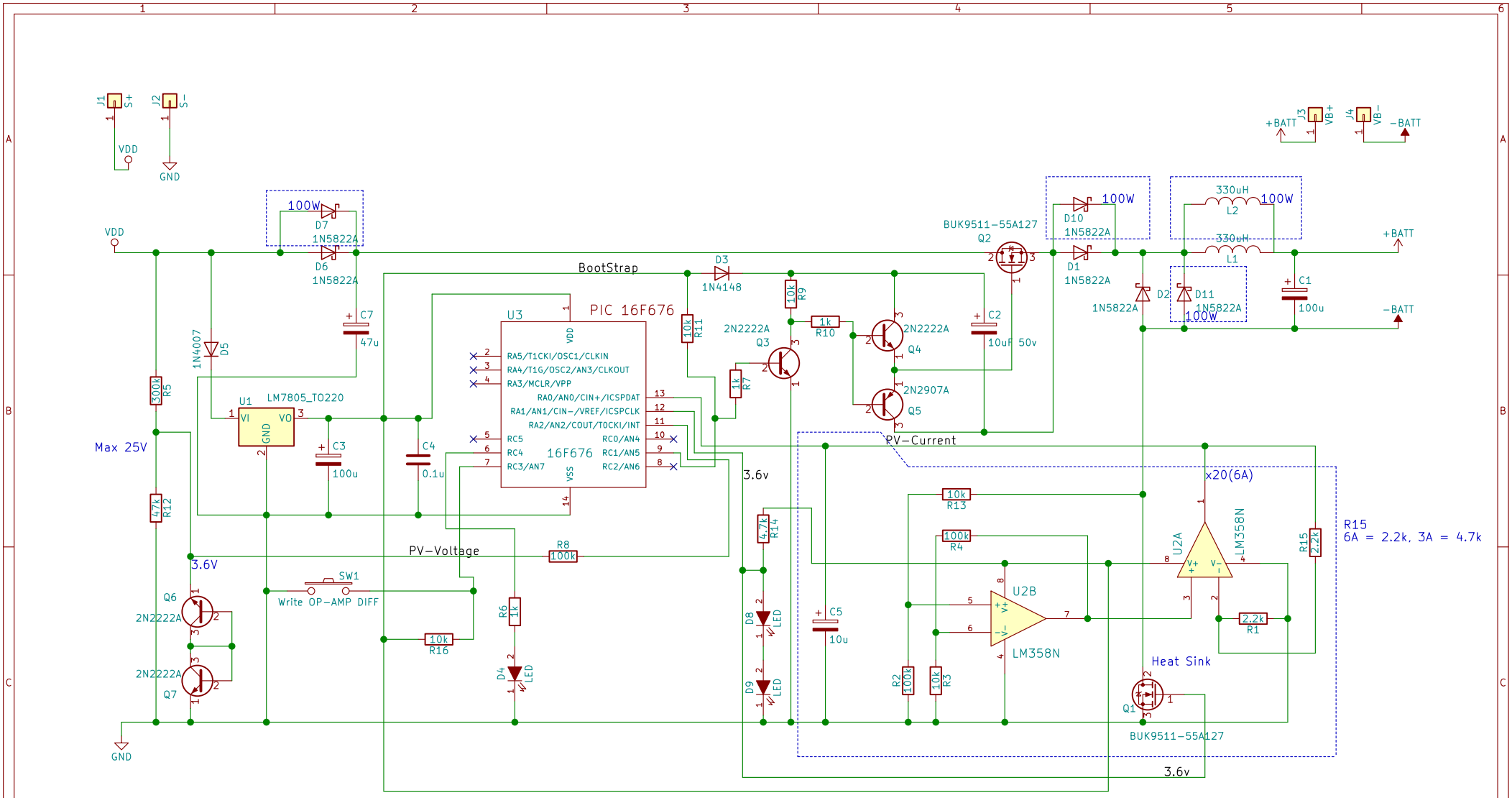


Sheet: /
File: 16F676−mppt.sch

**Title: Simple MPPT with 16F676 v1**

| | | |
|---|---|---|
| Size: A4 | Date: 2019−02−13 | **Rev: 1.81** |
| KiCad E.D.A. kicad (5.0.2)−1 | | Id: 1/1 |