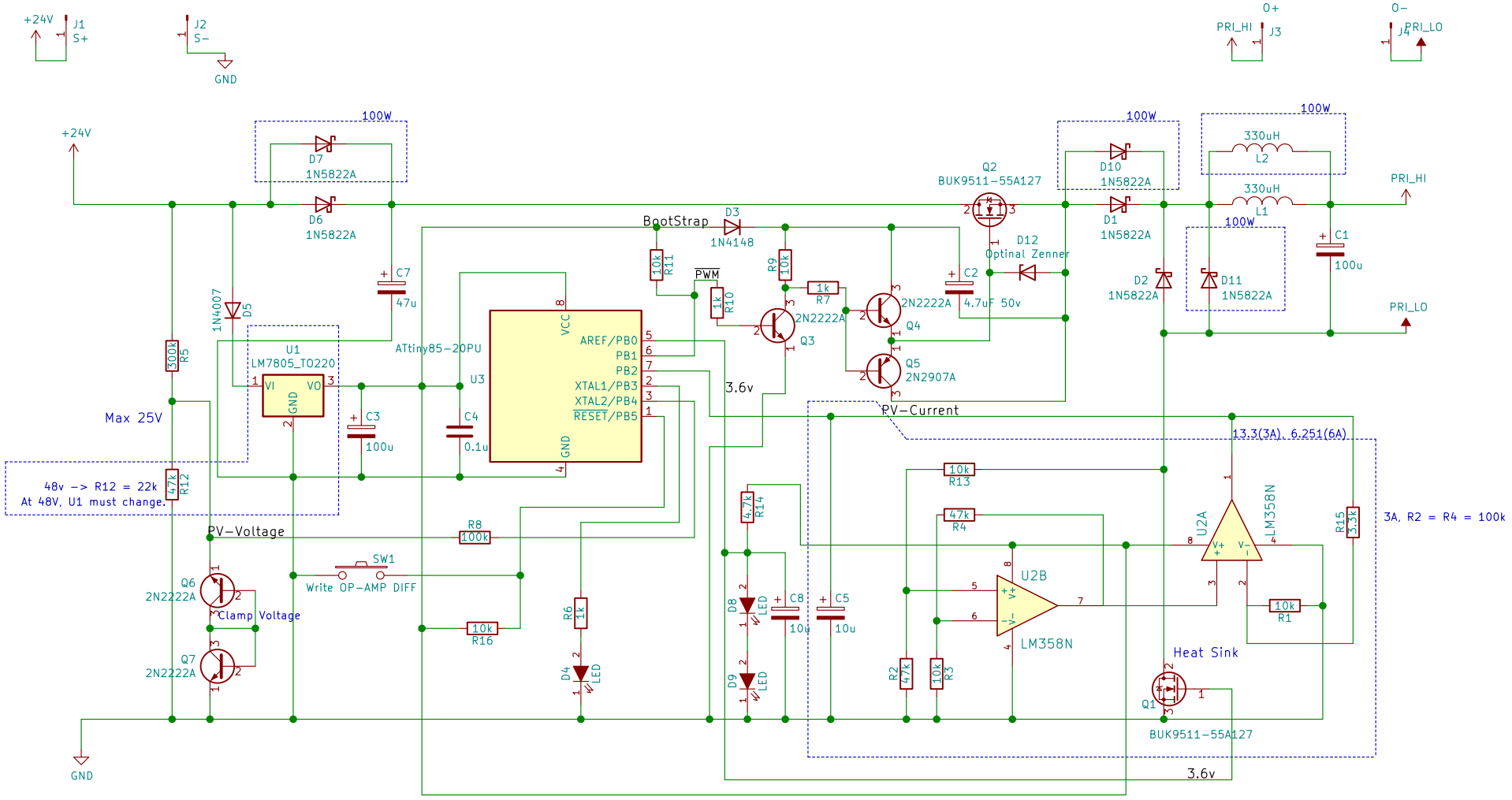

Q1 = BUK9511-55A127 -> 3.6{Aref}/(11*10-3{rds}*3{current})->54.54/10{U2B}/8=1.36-1
R15 = 10k{R1}*0.36 = 3.6k(3.3k)
R2 = R4 = 100k / 2 = 50k(47k)

Q1 = IRLZ44NPBF -> 3.6{Aref}/(35*10-3{rds}*3{current})=17.14/3.3{U2B}/8=1.298-1=0.298
R2=R4=33k(3A)/2=15k, R15 = 10k{R1, 3A} * 0.298 = 2.98k(2.7k or 2.2k)

Q1 rds <= 55milli Ohm. If bigger, R2/R3 and R4/R13 must change.
D12, C8 - optional

Q6, Q7 - vEBO as low as 5V. It's clamp voltage for protection.

Sheet: /
File: ATTiny85-mppt.sch

Title: Simple MPPT with ATTiny85

Size: A4	Date: 2019-02-15	**Rev: 1.93**
KiCad E.D.A. kicad (5.1.9)-1		Id: 1/1