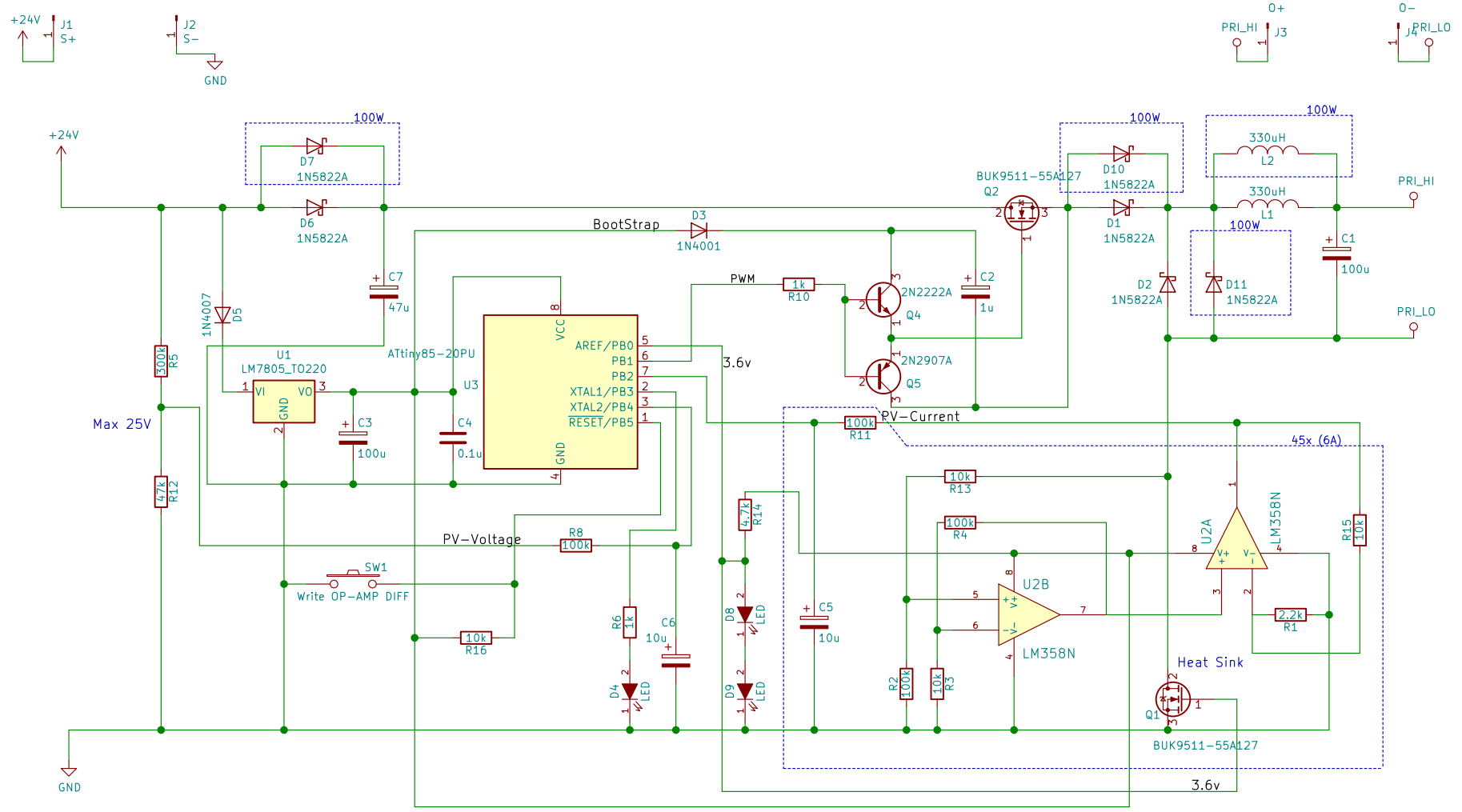

Q1 = BUK9511−55A127 −> 3.6{Aref}/(11*10−3{rds}*6{current}=54.54/10{U2B}=5.45−1
R1 = 10k{R15}/4.45 = 2.24k{2.2k}
Q1 rds <= 55milli Ohm. If bigger, R2/R3 and R4/R13 must change.

Q1 = IRLZ44NPBF −> 3.6{Aref}/(35*10−3{rds}*6{current})=17.14/10{U2B}=1.74−1
R15 = 2.2k{R1} * 0.74 = 2.97k or R1 = 10k{R15}/0.74 = 13.51k{12k}
40milli Ohm, R15 = 2.2k{R1} * (1.5−1) = 1.1{best, 1k} or R1 = 10k{R15} / (1.5−1) = 20k(22k)

Sheet: /
File: ATTiny85−mppt.sch

Title: Simple MPPT with ATTiny85

Size: A4	Date: 2018−10−25	**Rev: 1.1**
KiCad E.D.A. kicad (5.0.0)		Id: 1/1