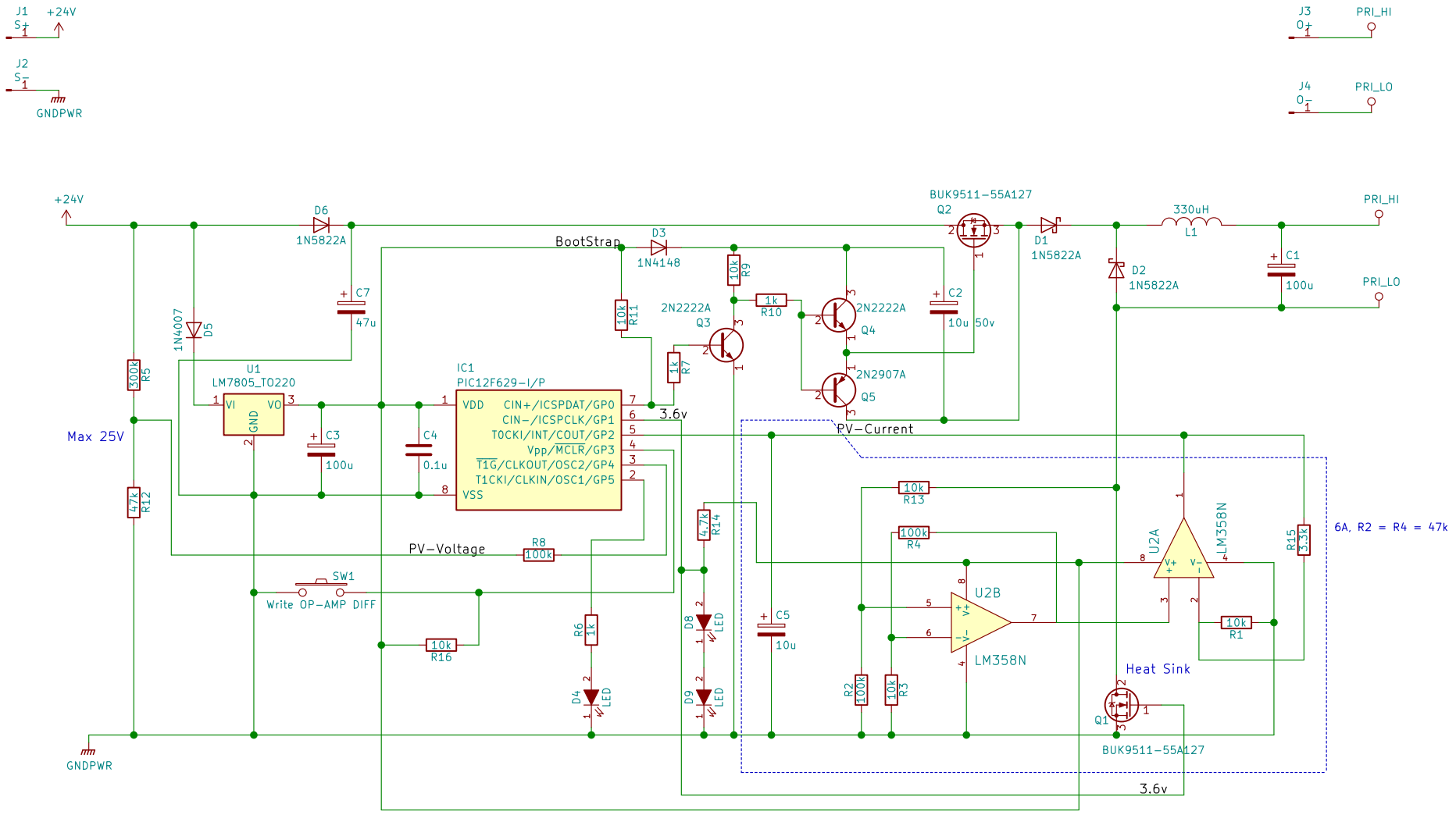

Sheet: /
File: 12f675-mppt.sch

Title: Simple MPPT with 12F675 v5

Size: A4	Date: 2019-02-15	**Rev: 1.62**
KiCad E.D.A. kicad (5.0.2)-1		Id: 1/1