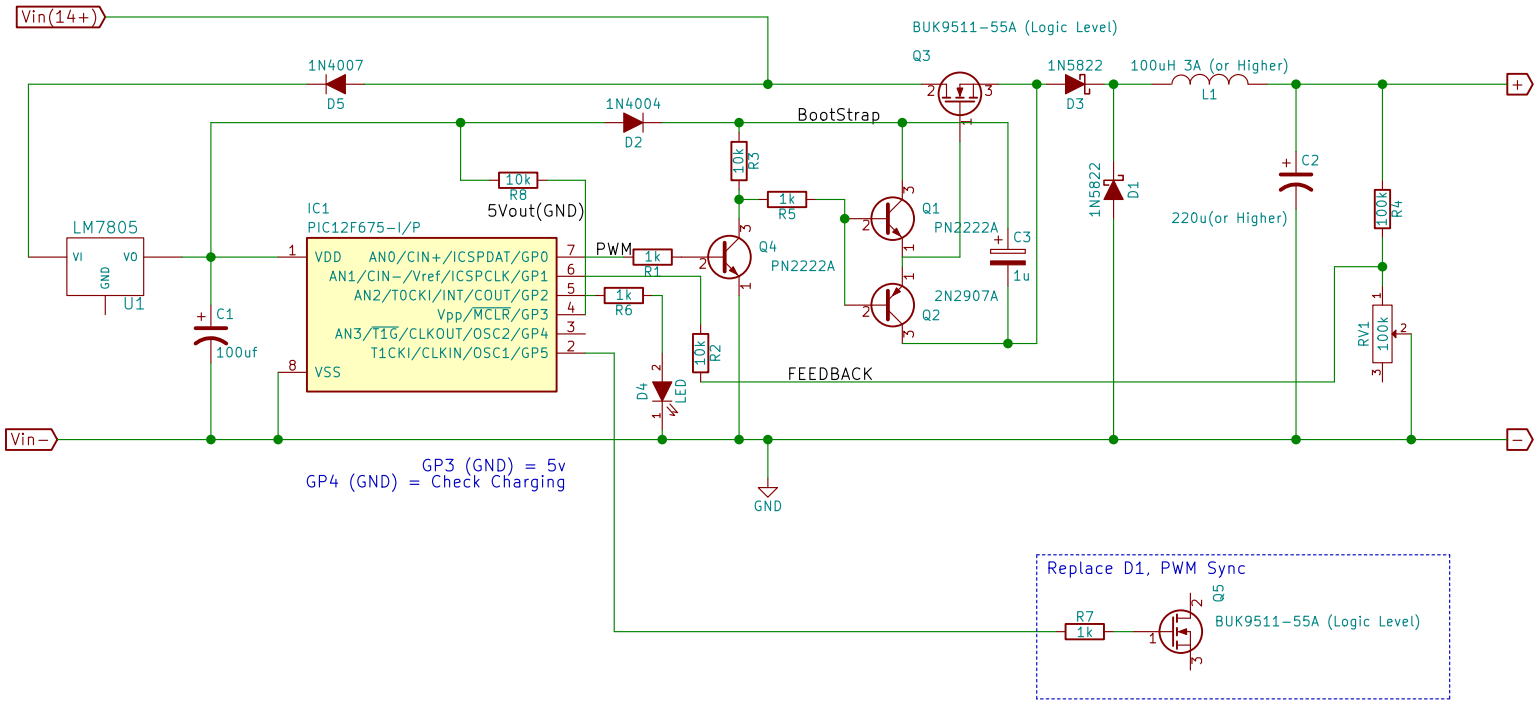

Sheet: /
File: regulator.sch

Title: PWM Regulator v3

Size: A4	Date: 2015-07-25	**Rev: 1.2h**
KiCad E.D.A. kicad (2015-07-24 BZR 5989, Git 9b9c794)-product		Id: 1/1