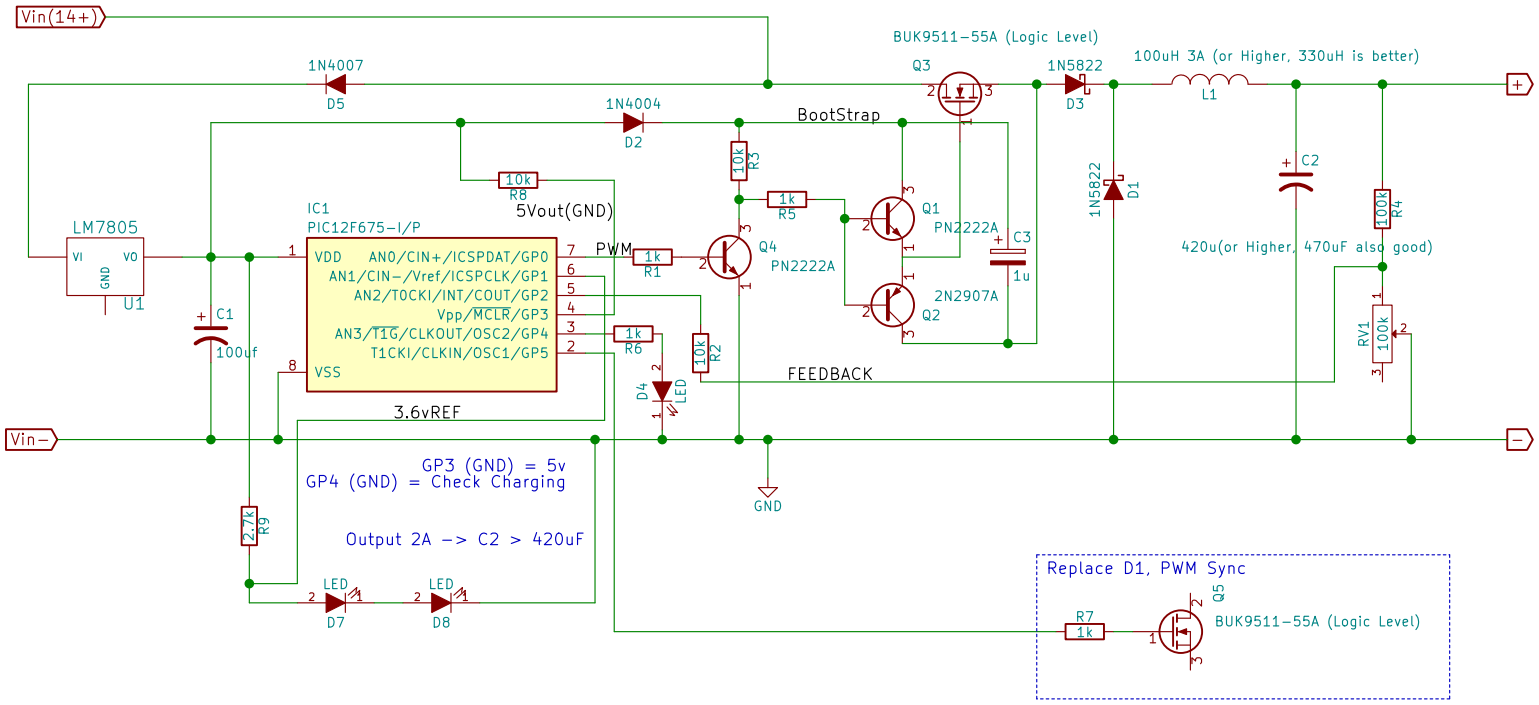

Sheet: /
File: regulator.sch

Title: PWM Regulator v3

Size: A4	Date: 2015-08-05	**Rev: 1.3**
KiCad E.D.A. kicad (2015-08-01 BZR 6032, Git 6a6a55f)-product		Id: 1/1