Latest updates: https://dl.acm.org/doi/10.1145/3665026.3665048

RESEARCH-ARTICLE

Segmentation of retinal arteries and veins using deep learning with limited training data

AHMED TAMER SALAH, School of Information Technology & Computer Science, El Sheikh Zayed, Giza, Egypt

GHADA KHORIBA, School of Information Technology & Computer Science, El Sheikh Zayed, Giza, Egypt

ESSAM A. RASHED, University of Hyogo, Kobe, Hyogo, Japan

Open Access Support provided by:

University of Hyogo

School of Information Technology & Computer Science

PDF Download
3665026.3665048.pdf
09 March 2026
Total Citations: 1
Total Downloads: 77

Published: 07 August 2024

Citation in BibTeX format

ICMIP 2024: 2024 9th International Conference on Multimedia and Image Processing
April 20 - 22, 2024
Osaka, Japan

ICMIP '24: Proceedings of the 2024 9th International Conference on Multimedia and Image Processing (April 2024)
https://doi.org/10.1145/3665026.3665048
ISBN: 9798400716164

Segmentation of retinal arteries and veins using deep learning with limited training data

Ahmed Tamer Salah*
Center for Informatics Science, School of Information Technology and Computer Science, Nile University, Giza, Egypt
aelbardy@nu.edu.eg

Ghada Khoriba
Center for Informatics Science, School of Information Technology and Computer Science, Nile University, Giza, Egypt
ghadakhoriba@nu.edu.eg

Essam A. Rashed
Graduate School of Information Science, University of Hyogo, Kobe, Japan
rashed@gsis.u-hyogo.ac.jp

ABSTRACT

This paper presents a novel image segmentation model specifically designed for the semantic segmentation of retinal arteries and veins in infrared reflection (RAVIR) imaging. The main challenge of this problem is the limitation of the dataset (RAVIR) used in this study with only 23 subjects. To overcome this problem, we introduce a unique augmentation pipeline, enhancing the dataset through rotations and various image processing techniques. This approach includes three training rounds with different dataset compositions to strengthen the model foundation and fine-tune the performance. We propose the Res-UNet model, an advanced variant of UNet with residual blocks tailored for precise localization in medical image segmentation. Experimental studies reveal that traditional loss functions like Tversky and dice coefficients pose challenges in multi-class segmentation. However, the sparse categorical cross-entropy loss function combined with the Res-UNet architecture leads to remarkable performance improvement. The model achieves a dice coefficient accuracy of 80.52% on the augmented dataset, demonstrating its effectiveness in handling complex blood vessel segmentation tasks. This study contributes to the medical image analysis field and provides insights into handling limited datasets in machine learning applications.

CCS CONCEPTS

• **Computing methodologies → Image segmentation**; *Neural networks*; Model development and analysis.

KEYWORDS

Image segmentation, deep learning, U-Net architecture, Res-UNet, medical imaging, retinal images

ACM Reference Format:
Ahmed Tamer Salah, Ghada Khoriba, and Essam A. Rashed. 2024. Segmentation of retinal arteries and veins using deep learning with limited training data. In *2024 9th International Conference on Multimedia and Image Processing (ICMIP) (ICMIP 2024), April 20–22, 2024, Osaka, Japan.* ACM, New York, NY, USA, 6 pages. https://doi.org/10.1145/3665026.3665048

Permission to make digital or hard copies of all or part of this work for personal or classroom use is granted without fee provided that copies are not made or distributed for profit or commercial advantage and that copies bear this notice and the full citation on the first page. Copyrights for components of this work owned by others than the author(s) must be honored. Abstracting with credit is permitted. To copy otherwise, or republish, to post on servers or to redistribute to lists, requires prior specific permission and/or a fee. Request permissions from permissions@acm.org.
ICMIP 2024, April 20–22, 2024, Osaka, Japan
© 2024 Copyright held by the owner/author(s). Publication rights licensed to ACM.
ACM ISBN 979-8-4007-1616-4/24/04
https://doi.org/10.1145/3665026.3665048

1 INTRODUCTION

The intricate network of retinal blood vessels is more than just a window to the soul. It is a window into an individual's systemic health [8]. Diseases such as diabetes, hypertension, and other vascular disorders manifest telltale signs in the retinal microvasculature long before other symptoms appear. Accurate segmentation and analysis of retinal arteries and veins are essential in the aid of diagnostics for several retinal diseases; therefore, it is not just a pursuit in medical imaging but a significant stride towards early and non-invasive diagnosis of a wide scope of diseases. This work focuses on the semantic segmentation of retinal arteries and veins from infrared reflectance (IR) imaging, utilizing the rich and detailed RAVIR dataset in conjunction with an advanced deep learning model centered around the UNet architecture [11]. Advancements in medical imaging technologies have enabled detailed visualization of the retinal blood vessels, facilitating non-invasive diagnostics and research. However, the accurate segmentation of these vessels, particularly distinguishing between arteries and veins, poses significant challenges due to their complex anatomy, the variability in imaging conditions, and the subtle differences between the vessel types.

One major challenge in deploying deep learning models is the requirements of relatively large datasets that demonstrate the variability of data such that it can be considered as a domain representative for efficient feature extraction. However, this constraint can not be always fulfilled due to constraints in data acquisition and the availability of consistent data. This problem is also addressed here by using a dataset with a limited number of subjects, which is difficult to used as is to represent data variability for efficient and reliable training.

2 RELATED WORK

The segmentation of renal arteries and veins is pivotal in diagnosing and treating renal and cardiovascular diseases [7, 13, 14]. As deep learning revolutionizes medical imaging, its application in renal vessel segmentation presents a unique blend of challenges and opportunities. In this section, recent related work is discussed with highlights on key advancements and challenges.

An advanced approach to retinal vessel segmentation is explored, highlighting its importance in diagnosing systemic diseases such as diabetes and hypertension [4]. This study presents an AI approach for retinal vessel segmentation, crucial for diagnosing diseases like diabetes and hypertension. It introduces a deep neural network that leverages dilated spatial pyramid pooling for better content and context capture in color fundus images, showing significant

accuracy improvements on datasets like DRIVE [12] and CHASE-DB1 [2]. Additionally, it shows the use of infrared imaging for semantic segmentation with a new dataset, AVIR, employing an advanced encoder-decoder structure with variational autoencoders for precise vascular analysis. The methodologies outperform existing standards, highlighting their potential in early disease detection and healthcare diagnostics.

Another study provides a review of various methodologies essential for retinal vessel segmentation [1]. This study offers a detailed review of methodologies for retinal vessel segmentation, crucial for eye disease diagnosis and treatment. It tackles the challenges of complex blood vessel structures in retinal images, comparing various pre-processing and segmentation techniques. The authors critically analyze existing algorithms, stressing the need for in-depth process knowledge, usually acquired through extensive training. By comparing different approaches, the review aids future research in addressing current field limitations, discussing implications for retinal vessel segmentation. It aims to enhance understanding and guide future innovation stages in this area.

There is also a review that explores the development of retinal vessel segmentation, transitioning from manual methods to advanced artificial intelligence and deep learning techniques [9].This review maps the advancement in retinal vessel segmentation, from manual techniques to sophisticated AI and deep learning methods, highlighting their relevance in diagnosing eye and cardiovascular diseases. It scrutinizes various methods, from basic to advanced models like CNNs and UNet, detailing their evolution, benefits, and drawbacks. Key challenges such as vessel size, complexity, and image quality are discussed, considering their effects on future research and clinical applications.

Moreover, there is an approach to network minimization discussed in a recent study [3]. The study advocates for simpler models in retinal vessel segmentation, challenging the notion that complexity equates to performance. It introduces a minimalistic UNet and its variant, WNet, demonstrating their ability to outperform more complex models with fewer parameters. Analyzing 20 techniques, the paper sets a strong foundation and describes the efficient design of these simplified models. It underscores a rigorous methodology with a focus on training protocols and evaluation metrics suitable for imbalanced datasets, like the dice score and MCC. The research highlights the minimalistic models' adaptability across different datasets and their improved performance in artery/vein classification and OCTA imaging. This pioneering work shifts the focus towards model simplicity and domain adaptation, offering new medical image analysis research directions.

finally, there was a study that conducted a review of deep learning techniques crucial for retinal vessel segmentation essential in diagnosing conditions like diabetes and hypertension [6]. It evaluates various deep learning frameworks, including CNNs, FCNs, and UNet architectures, for their effectiveness in segmentation tasks. The review delves into each model's design, performance on different datasets, and ability to address specific challenges. It highlights ongoing issues such as limited annotated data, poor image quality, and class imbalance, emphasizing the need for robust models adaptable to conditions like variable lighting and low contrast in fundus images. The study also discusses the significance of preprocessing, data augmentation, and transfer learning to improve segmentation results. This overview sheds light on the progress, current practices, and prospects in using deep learning for retinal vessel segmentation, offering a critical analysis of various models and approaches.

3 MATERIALS AND METHODS

3.1 RAVIR Dataset

The RAVIR dataset marks a notable stride in the semantic segmentation and quantitative analysis of retinal arteries and veins in IR imaging [5]. The dataset was mainly composed of 26 images for training and 20 for testing in ".png" image formats. The images were in size 768×768×3 where each channel of the mask was an actual duplication, This has made reading the mask in as a one-channel possible. The pixel values on the mask were 128 for the arteries and 256 for the veins. The team behind RAVIR has developed a deep learning-based method, named SegRAVIR, which is designed for the semantic segmentation of retinal arteries and veins. This method also includes the quantitative measurement of the widths of segmented vessels, a critical aspect in assessing the severity and progression of systemic diseases. One of the most innovative elements of their work is the introduction of a knowledge distillation framework for domain adaptation, enhancing the applicability of RAVIR pre-trained networks on color images. This aspect is particularly noteworthy as it showcases the adaptability and potential for widespread application of the RAVIR dataset. Moreover, he RAVIR dataset itself comprises high-resolution IR images captured using Scanning Laser Ophthalmoscopy (SLO). The use of Heidelberg Spectralis camera modality ensures that the images are of high quality and contrast, which are less affected by opacities in optical media and pupil size variations. This meticulous attention to detail in data collection enhances the dataset's value, providing a robust foundation for developing and testing deep learning models for retinal vessel segmentation. Furthermore, the ethical and responsible approach to data collection and sharing is commendable. The RAVIR project was carried out with the approval of the Institutional Review Board at UCLA and adhered to the tenets of the Declaration of Helsinki. The distribution of the dataset under the Attribution-Non Commercial-Share Alike 4.0 International license reflects the team's commitment to ethical research and collaboration.

3.2 Handling data scarcity

Data limitation is an essential obstacle in the development and implementation of efficient and reliable deep-learning model in medical image. The proposed method revolves around developing an image segmentation model for the RAVIR dataset, which is designed for the semantic segmentation of retinal arteries and veins in IR imaging. The model takes a retinal eye scan as the input image and the corresponding arteries and veins as a labeled mask, aiming to predict the output. However, a notable challenge with this dataset is its limited size, comprising only 23 image pairs and their corresponding masks. To address this challenge, we proposed a pipeline, illustrated in Fig. 1, that focuses on handling the problem of data scarcity through two key steps.

The first step involves augmenting the original data by rotating it at angles of 90°, 180°, and 270°, effectively expanding the dataset while maintaining its integrity. In the second step, data

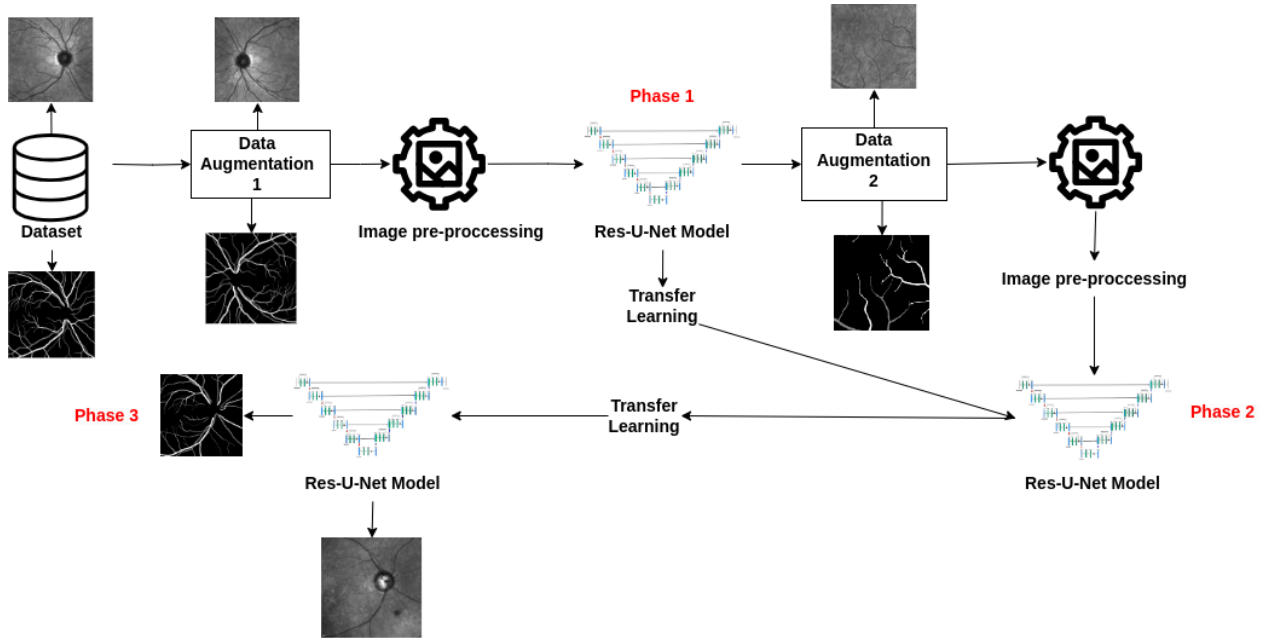

Figure 1: Overview of the proposed image segmentation pipeline.

augmentation 2 takes place which includes brightness adjustments, scaling, and image clipping. The clipping would output batches of each image, further diversifying the dataset. The training process is divided into three rounds. In the first round, the model is trained on the original data along with the first augmentation, which is considered a clean and accurate augmentation process. The second round involves training the model on the second data augmentation, potentially resulting in significant differences in image appearance compared to the original data. Finally, the third round retrains the model on the dataset used in the first round, providing examples that closely resemble the test data. This step is like fine-tuning the now-trained model with the original dataset. The rationale behind this approach is to initially train the model with a strong foundation of data that represents the desired segmentation, followed by leveraging the larger dataset from the second round to enhance the quality of segmentation. The final fine-tuning in the third round is designed to ensure that the model is well-prepared for similar data it may encounter during testing.

3.3 Data pre-processing

During the data pre-processing stage, a significant discovery was made concerning the masks of the data. These masks have a shape of 768×768×3, with the three channels being nearly identical. They represent the classes with pixel values of 0 for the background, 128 for arteries, and 255 for veins. This peculiar format posed challenges during training until we implemented the following pre-processing steps. The masks are assigning pixel values of 0, 1, and 2 to represent the three classes, respectively. This pre-processing approach helped resolve the issues encountered during training. Data augmentation employed two distinct approaches as previously outlined above. The first data augmentation process was straightforward, involving the rotation of images at different angles. This resulted in the generation of 138 additional images. For the second data augmentation, we implemented scaling, clipping, and brightness adjustments on the augmented data generated in the first step. This further increased the dataset size by adding 966 additional images. This approach was particularly valuable in the second round of training, where the objective was to provide the model with more diverse data to improve its generalization and enhance segmentation accuracy.

3.4 Proposed network architecture (Res-UNet)

The proposed Res-U-Net model is an advanced variant of the conventional U-Net architecture, augmented with residual blocks. This architecture is better than the vanilla U-Net as it has more encoder and decoder pairs, different convolution values, and a residual block on every level. This architecture is particularly designed for tasks requiring precise localization, such as semantic segmentation in medical image analysis. Integrating residual blocks enhances the model's ability to learn from complex datasets by addressing the vanishing gradient problem, thus improving the flow of gradients during training and also in capturing the complex anatomy of arteries and veins. The Res-UNet architecture (Fig. 2) is detailed as follows:

(1) **Input Layer**:
The model accepts input images of shape (768, 768, 3), suitable for high-resolution images.
(2) **Encoder Path**:
- **Initial Convolution Block**: The first layer in the encoder path consists of two convolutional layers, each with 32 filters of size 3×3, 'ReLU' activation, and 'same' padding. Batch normalization follows each convolutional layer.

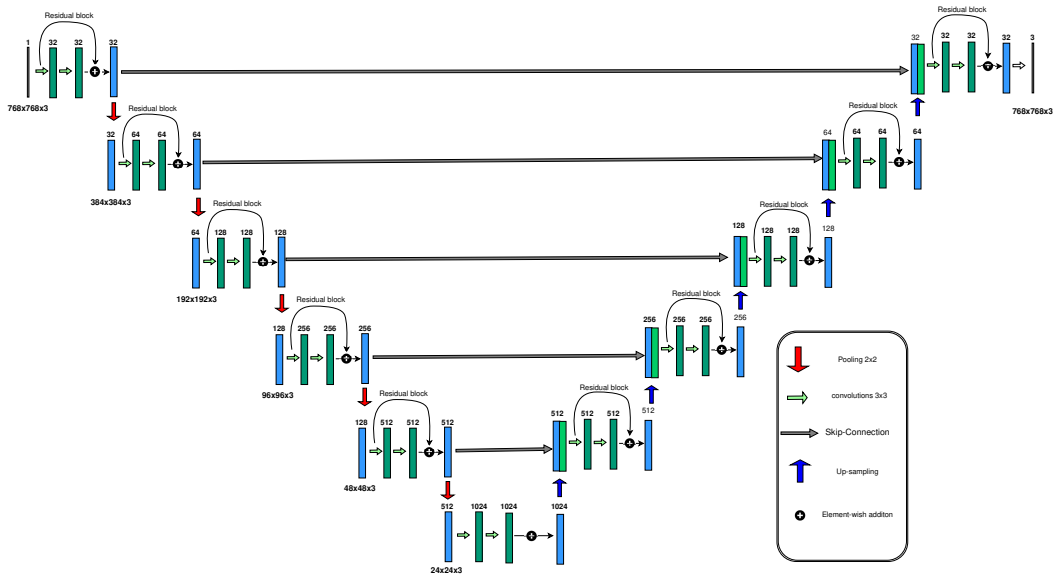

Figure 2: Network architecture of the proposed Res-UNet model.

- **Residual Blocks**: Following the initial block, there are four stages of residual blocks and max-pooling layers. Each residual block follows the architecture:
  - A convolutional layer with 1×1 filters, followed by batch normalization and 'relu' activation.
  - A convolutional layer with 3×3 filters, 'same' padding, followed by batch normalization.
  - A shortcut connection that adds the input to the block with the output of the 3×3 convolutional layer, followed by 'ReLU' activation.
- The number of filters in the residual blocks doubles at each stage, starting from 64 and going up to 512.
- Each residual block is followed by a max-pooling layer with a 2×2 window, reducing the spatial dimensions by half.

(3) **Bottleneck Layer**: This layer is at the bottom of the U-Net architecture, consisting of a residual block with 1024 filters.

(4) **Decoder Path**:
- The decoder path comprises a series of up-sampling and concatenation steps, followed by residual blocks.
- In each step, the feature map from the corresponding encoder level is concatenated with the up-sampled output from the lower level. This process helps in precise localization by combining high-level features with low-level ones.
- The number of filters in the halves of the residual block at each stage of the decoder, starting from 512 down to 32.

(5) **Output Layer**: The final layer of the model is a convolutional layer with three filters of size 1×1, 'same' padding, and a 'softmax' activation function. This layer is designed to output the probability distributions for the segmentation task.

4 EXPERIMENTS AND RESULTS

A wide range of experiments were conducted to encompassing various aspects, including data handling, model selection, and loss function exploration. Several loss functions were experimented with, including Tversky and dice loss, which showed promise in binary segmentation tasks but posed challenges when applied to multi-class segmentation. Notably, an experiment using both dice and Tversky loss functions led to an issue of exploding gradients [10]. Ultimately, the sparse categorical cross-entropy loss function was found to perform well for the model. However, the dice coefficient loss function was still used for monitoring early stopping, learning rate scheduling, and model checkpointing.

In the binary segmentation experiments using the Res-UNet architecture, each class was treated separately by casting it to a mask. Despite these efforts, the model achieved an accuracy of no more than 60% during the initial training phase, with Tversky serving as the loss function. The use Res-UNet++ approach was followed similarly to the Res-UNet in binary segmentation tasks, with Tversky as the loss function. However, the model's accuracy reached approximately 57%.

Another experiment was conducted and despite the potential benefits of using denser and attention layers for multi-class segmentation, the Res-UNet++ model did not exceed 65% accuracy when employing sparse categorical cross-entropy as the loss function. The proposed approach utilizing the Res-UNet model has yielded impressive results, achieving a validation accuracy of 80.52% in terms of dice coefficient accuracy on the combined dataset of data augmentation 1 and the original data.

During the initial phase of the study, the model's training performance achieved a segmentation accuracy of 72.28%, demonstrating competency in the overall segmentation task. Subsequently, in the second phase, the model attained a slightly lower accuracy of 70.79%.

This phase focused on implementing the second type of data augmentation, as previously discussed in the manuscript. The model was trained to generalize the segmentation task using a dataset enriched with various random data augmentations. This approach aimed to enhance the model's ability to perform segmentation on datasets that diverge from the original data's characteristics. In the final phase, the model exhibited a significant improvement, achieving an accuracy of 80.52% on a composite dataset comprising the original data and the first data augmentation strategy. The primary objective of this phase was to refine the model's performance on the original dataset, successfully elevating the accuracy by nearly 10% compared to the first phase.

It should be emphasized that the model's weights were consistently saved at the point of highest validation accuracy. This means that even in cases where the model may have been overfitting, the saved weights correspond to a stage where overfitting had not occurred. This was achieved by using a Keras callback function that saves the best weights for validation loss consistently after each epoch.

Figure 3 displays the model's segmentation performance on the provided test dataset, which originally did not include a mask. Upon detailed examination, it becomes evident that the segmentation process involves initially separating the image into three channels. These channels are then integrated into a single-channel mask through a post-processing technique. This technique selects the maximum value from the three channels to form the single-channel mask. The purpose behind this approach is to capture the most distinct class in the one-channel mask while preserving class representation. This method proves effective as the overlap between classes is minimal, thereby reducing the potential for misclassification.

The task of segmenting retinal arteries and veins is inherently challenging, primarily due to the intricate structure of the retinal vasculature, the variability in imaging conditions, and the nuanced differences between vessel types. Advanced segmentation capabilities are essential to accurately delineate the delicate features of arteries and veins. Our experiments highlight these challenges, particularly noting that segmentation accuracy may be influenced by the quality and variability of the training data. Additionally, the model's performance might be unstable when processing scans from different machines or with varying settings, which could affect its adaptability to diverse imaging conditions. Despite these challenges, the applied segmentation approach demonstrated notable success in differentiating between the complex structures of retinal blood vessels.

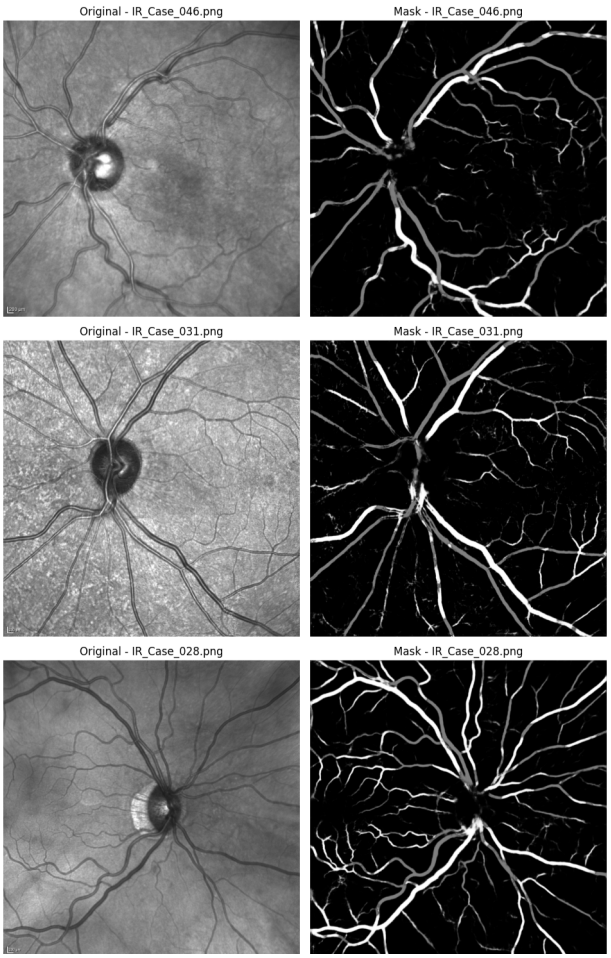

Figure 3: Examples of retinal image segmentation results.

5 CONCLUSION

This paper presents an advancement in the semantic segmentation of retinal arteries and veins using infrared reflectance imaging. Through the innovative development of the Res-UNet model, augmented with residual blocks, the authors have tackled the challenges posed by the limited size of the RAVIR dataset. By employing a unique augmentation pipeline and a multi-phase training approach, the model demonstrates a notable improvement in the precision of medical image segmentation, achieving a Dice coefficient accuracy of 80.52%.

In conclusion, this study shows a new approach to using the Res-UNet model in image segmentation for arteries and veins on the RAVIR dataset. The approach can be useful in creating a model for image segmentation on a limited dataset and achieving a relatively high accuracy from a less complex model compared to other state-of-the-art models. The authors contribute to the ongoing pursuit of more accurate and reliable biomedical image segmentation with limited datasets paving the way for future research and development in medical image analysis and beyond.

REFERENCES

[1] J. Cervantes et al. 2023. A comprehensive survey on segmentation techniques for retinal vessel segmentation. *Neurocomputing* 556 (2023), 126626.
[2] M. M. Fraz et al. 2012. An Ensemble Classification-Based Approach Applied to Retinal Blood Vessel Segmentation. *IEEE Trans. Biomed. Eng.* 59, 9 (2012), 2538–2548.
[3] A. Galdrán et al. 2022. State-of-the-art retinal vessel segmentation with minimalistic models. *Scientific Reports* 12, 1 (2022).
[4] A. Hatamizadeh. 2020. *An Artificial Intelligence Framework for the Automated Segmentation and Quantitative Analysis of Retinal Vasculature.* Springer-Verlag.
[5] A. Hatamizadeh et al. 2022. RAVIR: A Dataset and Methodology for the Semantic Segmentation and Quantitative Analysis of Retinal Arteries and Veins in Infrared Reflectance Imaging. *IEEE J. Biomed. Health Info.* 26, 7 (2022), 3272–3283.

[6] A. Khandouzi et al. 2022. Retinal Vessel Segmentation, A review of classic and deep methods. *Annals of Biomed. Eng.* 50, 10 (2022), 1292–1314.
[7] A.M. Mendonca and A. Campilho. 2006. Segmentation of retinal blood vessels by combining the detection of centerlines and morphological reconstruction. *IEEE Trans. Medical Imaging* 25, 9 (2006), 1200–1213.
[8] C. J. Pournaras et al. 2008. Regulation of retinal blood flow in health and disease. *Progress in Retinal and Eye Research* 27, 3 (2008), 284–330.
[9] Q. Qin and Y. Chen. 2024. A review of retinal vessel segmentation for fundus image analysis. *Eng. App AI* 128 (2024), 107454.
[10] E. Raff. 2022. *Inside deep learning: Math, algorithms, models.* Simon and Schuster.
[11] O. Ronneberger, P. Fischer, and T. Brox. 2015. U-net: Convolutional networks for biomedical image segmentation. In *Medical Image Computing and Computer-Assisted Intervention–MICCAI 2015: 18th International Conference, Munich, Germany, October 5-9, 2015, Proceedings, Part III 18.* Springer, 234–241.
[12] J. Staal et al. 2004. Ridge-based vessel segmentation in color images of the retina. *IEEE Trans. Med. Imag.* 23, 4 (2004), 501–509.
[13] Nguyen U. et al. 2013. An effective retinal blood vessel segmentation method using multi-scale line detection. *Pattern Recognition* 46, 3 (2013), 703–715.
[14] X. You et al. 2011. Segmentation of retinal blood vessels using the radial projection and semi-supervised approach. *Patt. Recogn.* 44, 10 (2011), 2314–2324.