TRANSMISSION ENGINEERING STANDARD

نقل الكهرباء
National Grid SA

NATIONAL GRID SA
AMMENDMENT-01
S&SD

TES-P-119.02

Revision No. 01

BASIC DESIGN ASPECTS

PROPRIETARY INFORMATION

This document contains proprietary information developed by and for exclusive use of National Grid Saudi Arabia. Your acceptance of the document is an acknowledgement that it must be used for the identified purpose/application and during the period indicated. It cannot be used or copied for any other purposes nor released to others without prior written authorization of National Grid Saudi Arabia. National Grid Saudi Arabia will not be responsible for misuse and/or misapplication, and any harm resulting there from. National Grid Saudi Arabia also reserves the right to take any necessary actions to protect its interest against unauthorized use.

ORIGINATED BY	CERTIFIED BY	APPROVED BY
Engr. Khaled S AlMutairi Division Manager, Substations Specifications	**Engr. Khalid Abdullah AlTawil** Department Manager, Standards & Specifications	**Engr. Waleed A. Al-Saadi** Vice President, Engineering
Date of Approval: August 17, 2020		

FIGURE 02-15: TYPICAL **110kV**/115kV/**132kV** DOUBLE BUS, SINGLE BREAKER ARRANGEMENT

NOTE:

1) In 110kV/115kV/132kV/33kV/13.8kV substations, Line side Disconnector (**D610&D615** as in Figure: 02-15) and High-Speed Earthing Switches (K612 & K617 as in Figure: 02-15) are not required in Transformer feeders, if transformer **110kV/115kV**/132kV side is connected with Gas Insulated Bus duct (GIB).

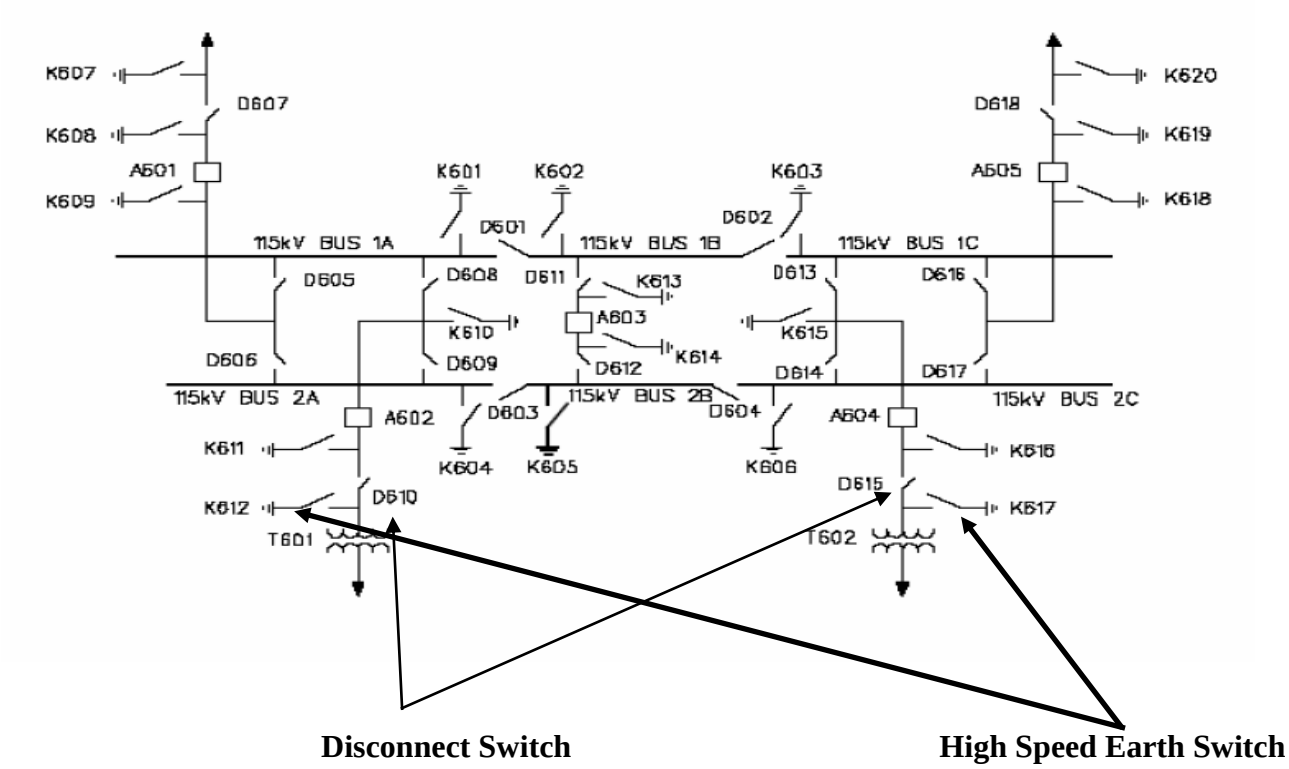

FIGURE 02-15:
TYPICAL **110kV**/115kV/**132kV** DOUBLE BUSBAR SINGLE BREAKER ARRANGEMENT

ORIGINAL DOCUMENT APPROVED August 04, 2007

REVISIONS

No.	Date	DESCRIPTION
1	July 18, 2013	General Modifications
2		
3		

نقل الكهرباء
National Grid SA

TES-P-119.02

Revision No. 01

BASIC DESIGN ASPECTS

PROPRIETARY INFORMATION

This document contains proprietary information developed by and for exclusive use of National Grid Saudi Arabia. Your acceptance of the document is an acknowledgement that it must be used for the identified purpose/application and during the period indicated. It cannot be used or copied for any other purposes nor released to others without prior written authorization of National Grid Saudi Arabia. National Grid Saudi Arabia will not be responsible for misuse and/or misapplication, and any harm resulting there from. National Grid Saudi Arabia also reserves the right to take any necessary actions to protect its interest against unauthorized use.

ORIGINATED BY	CERTIFIED BY	APPROVED BY
Engr. Abdulrahman G. Al-Ghayhab Division Manager, Substations Specifications	**Engr. Suliaman N. Al-Dosari** Department Manager, Standards & Specifications	**Engr. Mohammad S. Al-Rafaa** Vice President, Engineering

Date of Approval: July 18, 2013

TRANSMISSION ENGINEERING STANDARD

TABLE OF CONTENTS

1.0 PURPOSE AND SCOPE

2.0 STANDARD NOMINAL VOLTAGES

3.0 CLASSIFICATION OF SUBSTATIONS

3.1 Outdoor Substations
3.2 Indoor Substations
3.3 Gas Insulated Switchgear (GIS) Substations

4.0 BUS (SWITCHING) ARRANGEMENTS

5.0 ENVIRONMENTAL CONSIDERATIONS

5.1 Appearance
5.2 Public Safety
5.3 Site Conditions
5.4 Electrostatic and Electromagnetic Field Effects

6.0 SYSTEM PARAMETERS

6.1 Frequency
6.2 System Nominal Voltage
6.3 Harmonics
6.4 AC Auxiliary Voltages
6.5 DC Auxiliary Voltages
6.6 Insulation Levels
6.7 Creepage Distance

7.0 SYSTEM CONVENTIONS

7.1 Circuit Configuration
7.2 System Grounding
7.3 Phase Designations
7.4 Mimic Bus Color Code
7.5 Equipment Designations

8.0 STANDARD EQUIPMENT AND RATINGS

8.1 Power Transformer
8.2 Circuit Breakers

9.0 BIBLIOGRAPHY

1.0 PURPOSE AND SCOPE

The purpose of this chapter is to highlight National Grid, Saudi Arabia practices with respect to standard nominal voltages, substation classification and switching arrangements. It also defines the basic criteria required to design a substation. These include the environmental considerations, system parameters, system conventions and standard substation equipment and their ratings.

Other relevant aspects of substation engineering, like grounding, lighting, surge protection, lightning protection, insulation co-ordination, clearances, cable laying, etc. shall be per other chapters of TES-P-119.

The design shall make adequate provision for safety of operation and maintenance personnel, reliability and continuity in service, ease of inspection and maintenance, ease and clarity of operation, avoidance of spurious alarms, ability to withstand the severe service conditions specified, freedom from undue vibration and noise, exclusion of vermin, birds and animals, precautions to minimize fire risk. To limit the required stock of spare parts all equipment and parts thereof performing similar duties shall be interchangeable.

All support structures for electrical equipment shall be designed to suit the service conditions specified in 01-TMSS-01, the loads imposed on them, and the appropriate electrical clearance requirements as mentioned in TES-P-119.08. The portal structures and foundations shall be designed considering the spans required by the substation layout.

The SI system of units shall be used for all Engineering and Design.

2.0 STANDARD NOMINAL VOLTAGES

The standard nominal voltages used by National Grid, Saudi Arabia are 11 kV, 13.8 kV, 33 kV, 34.5 kV and 69 kV for distribution and 110 kV, 115 kV, 132 kV, 230 kV and 380 kV for transmission of electric power.

3.0 CLASSIFICATION OF SUBSTATIONS

3.1 Outdoor Substations

In outdoor substation, the primary side switchgears of power transformer shall be installed in the open air and the secondary/tertiary side switchgears shall be installed indoors in an air-conditioned building.

3.2 Indoor Substations

In indoor substation, both primary and secondary/tertiary side switchgears of the power transformer shall be installed in an air-conditioned building.

3.3 Gas Insulated Switchgear (GIS) Substations

In GIS substation the primary side switchgears of power transformer shall be totally enclosed in an SF_6 gas insulated housing and shall normally be installed indoors in an air-conditioned building. The exit bus ducts from GIS (if any) shall be installed

outdoors. Secondary/tertiary side switchgears of the power transformer shall be installed in an air-conditioned building.

In all the three categories of substations, power transformers/reactors and station service transformers shall be installed in the open air (outdoors).

4.0 BUS (SWITCHING) ARRANGEMENTS

The main bus bar switching arrangements shall be as per project scope of work and technical specifications (SOW/TS) and the same shall be one of the following :

- Single /straight bus (Figure 02-1)
- Double bus, single breaker (Figure 02-2 or Figure 02-09 or Figure 02-15)
- Ring bus (Figure 02-3 or Figure 02-11)
- Breaker and a half (Figure 02-4 or Figure 02-10 or Figure 02-8)
- PI (Figure 02-5 or Figure 02-13)
- Inverted PI (Figure 02-6 or Figure 02-12) and extended inverted PI (Figure 02-7 or Figure 02-14)

Offered bus bar arrangement shall be cost effective (present worth of annual costs and minimum life cycle cost), flexible and safe to operate and maintain with required degree of service continuity and reliability as well as the availability of power sources. Transmission substation equipment losses shall be evaluated to justify minimum life cycle cost.

If specified in SOW/TS, some of these arrangements may be modified by the addition of circuit breakers and/or disconnect switches to meet the requirements of a particular installation.

In Double Bus, Single Breaker Arrangement the bus coupler breaker connecting the two main buses shall be normally closed, so transfer of a feeder from one bus to the other bus will be possible without de-energizing the feeder circuit, by operating the disconnect switches.

In Breaker and a Half Arrangement under normal operating conditions, all breakers shall be closed and the two main buses shall be energized. To trip a circuit the two associated circuit breakers must be opened.

Radial taps from 230 kV and 380 kV transmission lines to supply distribution type loads shall be avoided.

Transmission substations shall be designed for single contingency emergency situation. It is desirable that motor loads shall ride through this single contingency situation.

Automatic load shedding shall be used if specified in SOW/TS to aviod cascading outages and to minimize transient time of system disturbances/disruption.

Power factor correction shall be evaluated if voltage regulation is excessive.

5.0 ENVIRONMENTAL CONSIDERATIONS

5.1 Appearance

5.1.1 In some areas, zoning regulations shall require screening, low profile designs, or other measures to improve appearance of outdoor substation. Substations shall be located in a way that they are not strikingly visible to the public.

Sites that avoid the outdoor substation structures appearing on the skyline, and those that take advantage of the natural land contours and tree plantations are preferred.

5.1.2 The silhouette of a outdoor substation may be reduced in several ways including the use of solid shape structural sections.

5.1.3 Engineering of substation facilities should be coordinated to develop the least overall objectionable layout. Installation of underground distribution circuits for some distance from the substation before going overhead should be considered if necessary to alleviates the problem of a large number of lines converging on the substation and the associated right of way problems.

5.1.4 Lowering of the outdoor substation profile may also be accomplished by Inverted Bus Arrangement other than underground circuits if a large ground area is available and where beauty and aesthetic qualities are necessary.

5.1.5 Generally, use of complementary colors rather than use of contrasting colors shall be better to blend the substation building into the background.

5.1.6 Outdoor substations shall consider nearby airports and aeronautic corridors (if any), as there are usually restrictions on the maximum height of structures and due to possible disturbances on navigation equipment.

5.1.7 Following present National Grid, Saudi Arabia practices shall be followed:

All 69 kV, 110 kV, 115 kV, 132 kV, 230 kV and 380 kV substations shall be indoor GIS modular type unless otherwise specified in project SOW/TS.

All substations upto 34.5 kV shall be indoor type unless otherwise specified in project SOW/TS.

Outdoor 110 kV and above (switching) substations, if specified in project SOW/TS, shall have dead-tank type circuit breakers and conventional CTs and PTs.

5.2 Public Safety

5.2.1 Substations shall be safe for people carrying out operation and maintenance as well as to public in the vicinity of the substation.

5.2.2 The primary means of ensuring public safety at substations shall be by erection of a suitable barrier such as a boundary wall or a metal fence per TES-P-119.19.

Where power transformers are located very near **to** the boundary limits, concrete perimeter wall in front of the transformers shall be of removable precast panels to provide easy access for installation and maintenance.

5.2.3 Additional means of protecting the public shall be taken through adequate design of all facilities inside the fence/wall wherever required.

5.2.4 Appropriate warning signs shall be posted on the peripheral barrier of the substation. Details of the warning sign shall be per TES-P-119.21.

5.2.5 Every substation shall have fire detection and protection system in accordance with TES-P-119.21. Surface Treatment of Metals and Building Exterior shall be such as to minimize as far as possible the risk of fire and the resultant damage in the event of fire.

5.2.6 The design and erection of the substations shall be such that limits on noise levels of equipment in service and out of service are not exceeded 65dB(A) during day time (06:00-22:00hrs.) and 55dB(A) during night time (22:00-06:00hrs.) at substation boundary including background noise, unless otherwise specified in local regulations.

5.2.7 The orientation of the transmission substation and location of the gates shall be decided based on the location, available plot size and/or right of ways. The preferred orientation of a transmission substation located in urban area shall be such that a public road is available at the power transformer side.

5.3 Site Conditions

The complete substation shall be designed to meet the service conditions specified in 01-TMSS-01.

5.3.1 Soil Conditions

a. Surface conditions include salt flats (sabkhah), marl, eolian sand and rock. Preferably substations shall not be located in areas of sabkhah. If can't be avoided, necessary soil improvement shall be carried out as approved by National Grid, Saudi Arabia.

b. Ground water table varies from near the surface in the coastal zone to several meters below grade in the inland areas.

c. Soil investigation must be carried out for each substation site before finalizing the design and engineering.

5.4 Electrostatic and Electromagnetic Field Effects

5.4.1 Considerations shall be given to prevent radio and television interference caused by visible and audible corona at energized parts having small radii or conductors having small diameters, particularly when conductive climatic conditions prevail.

5.4.2 Induced electromagnetic disturbances at interfaces of the secondary system, as a result of switching in the high voltage system, shall not exceed 1.6 kV common mode for normal EMC severity class, and 0.8 kV common mode for reduced EMC severity class.

5.4.3 Proper considerations shall be given to the size of connectors/conductors connected to equipment such as voltage transformer and coupling capacitor to reduce corona.

5.4.4 In all substations, equipment layout and design shall be for ultimate development and arranged such that during maintenance in a de-energized bay the electric field from adjacent energized bays at power frequency shall not exceed 5 kV_{rms}/m and magnetic field shall not exceed 0.1mT at a height of one (1) meter above ground. This value shall also apply to access roads, walkways and working areas to reduce the likelihood of station personnel receiving annoying shocks from grounded structures, e.g. switchgear support structures, low voltage lamp stands, etc.

5.4.5 Directly under energized 110 kV, 115 kV, 132 kV, 230 kV and 380 kV outdoor conventional equipment the electric field at power frequency shall not exceed 10 kV_{rms}/m and magnetic field shall not exceed 0.5mT at a height of one (1) meter above ground.

6.0 SYSTEM PARAMETERS

6.1 Frequency

The nominal frequency for National Grid, Saudi Arabia system is 60 Hz and the permissible operating frequency range is between 59.9 Hz and 60.1 Hz during normal system operation.

6.2 System Voltage

The normal permissible operating voltage range for nominal voltage of 11 kV up to 380 kV is ±5%.

6.3 Harmonics

Equipment/materials connected to National Grid, Saudi Arabia transmission system shall not impose voltage harmonics exceeding the following limits:

Table 02-1: Harmonics Level

Voltage Distortion	Transmission Voltage	Medium Voltage
Total Harmonic Voltage Distortion	1.5%	5%
Individual Harmonic Voltage Distortion	1.0%	3%

6.4 AC Auxiliary Voltages

Unless otherwise specified in the Scope of Work and Tehnical Specification (SOW/TS) AC auxiliary voltages to be adopted for National Grid, Saudi Arabi substations are 400/230V, 60Hz. The permissible operating voltage range is ± 5%.

6.5 DC Auxiliary Voltages

The standard nominal DC auxiliary voltages adopted by National Grid, Saudi Arabia as well as the DC system operating ranges are specified in Table 02-2.

Table 02-2:: Standard DC Auxiliary Voltages

	Nominal Voltage (Vdc)	Operating Range (Vdc)
For Control, annunciation and protection (New Substation)	125	101.5 to 136.3
For Control, annunciation and protection (Reinforced Substation, where applicable)	110	99 to 126.5
For communication	- 48	- 42 to - 56

6.6 Insulation Levels

The insulation levels for all HV, MV and LV (AC & DC) equipment shall not be less than the values specified in 01-TMSS-01.

Basic lightning impulse insulation levels (BIL) are specified with respect to a standard 1.2/50 μs wave shape and the basic switching impulse insulation level (BSL) is specified for a 250/2500 μs impulse with tolerances specified by the Industry Standards.

6.7 Creepage Distance:

The creepage distance of all indoor and outdoor bushings/insulators shall be per 01-TMSS-01.

6.8 RTV Coating

Unless otherwise specified in the relevant SOW/TS, Room Temperature Vulcanizing (RTV) Silicone Rubber Coating shall be applied to substation outdoor ceramic

insulators (including gantries), equipment bushings, and equipment housings etc., in all substations located within 25 km radial distance from the sea coast line.

7.0 SYSTEM CONVENTIONS

7.1 Circuit Configuration

Three phase, three wire (3ϕ, 3W) circuit configuration shall be used throughout National Grid, Saudi Arabia system for all voltage levels from 380 kV down to 11 kV. Three phase, four wire (3ϕ, 4W) circuit configuration shall be used for all AC auxiliary circuits.

7.2 System Grounding

Unless otherwise specified in project SOW/TS, the system neutral shall be solidly grounded for all service voltages. Power transformer secondary neutral (wye neutral point) shall be solidly grounded, resistance earthed (medium voltage) or effectively grounded as specified in SOW/TS and for grounding of Power transformer secondary with delta winding, and also for Power Transformer with loaded stabilizing winding, ZN grounding transformer shall be provided.

7.3 Phase Designations

The phases in all new substations shall be designated as R (Red), Y (Yellow) and B (Blue) throughout the substation when viewed from Top to Bottom.. For transformer and GIS phase designation shall be as specified in the material standards. For MV switchgears phase conductors when viewed from operating side, the phase designation shall be in line with transformer MV phase designation. For reinforced substations the three phases shall be designated as per the existing system

7.4 Mimic Bus Color Code

Color of mimic bus shall be as specified in 31-TMSS-01. The color of the mosaics base shall be same as that of the panel. The part of each transformer symbol representing each winding shall be colored in accordance with the voltage of the winding.

7.5 Equipment Designations

Equipment Designation shall be per respective Operating Area requirements.

8.0 STANDARD EQUIPMENT AND RATINGS

8.1 Power Transformer

Unless otherwise specified in project SOW/TS the standard power transformer capacities (MVA) shall be one of the values from Table 02-3.

Table 02-3 : Standard Power Transformer Capacities measured at Secondary Terminals and Vector Group

Substation Nominal Voltage Rating (kV/kV/kV**)	Transformer Capacity(MVA)		Vector Group
	ONAN/ONAF	ONAN/ONAF1 /ONAF2 (OFAF*)	
380/230	450/600	450/600/750	YNd, YNauto d
380/132/13.8 or 380/115/13.8 or 380/110/13.8	100/125, 175/350	210/280/350, 302/402/502	YNyn, YNd, YNauto d1
230/132 or 230/115	136/181, 200/250, 300/400	136/181/227	YNd, YNauto d
230/69	60/120, 90/180, 100/133, 135/180	100/133/167, 105/205/255, 150/200/250	YNd, YNynd
230/34.5	60/80, 100/133	-	YNd
132/33 or 132/34.5	30/40, 50/67, 80/100	30/40/50, 50/66/83, 80/106/133	YNyn0 + d1, YNd1, Dyn
132/13.8	30/40, 50/67	30/40/50	YNyn0+d1, YNyn0+d5, YNd, Dyn1
115/34.5 or 110/33 or 110/34.5	30/40, 50/67, 80/100	-	YNyn, Dyn
115/13.8 or 110/13.8 or 110/11	30/40, 50/67	30/40/50	YNyn, YNd, Dyn
132/13.8/6.6		40/50/60	YNyno+d1
69/13.8	20/25, 30/40	-	Dyn
34.5/13.8 or 33/13.8	13/20, 30/40	-	YNyn, Dyn

*OFAF cooling shall be used only when approved by National Grid, Saudi Arabia.
** Applicable for Tertiary Winding only

8.2 Circuit Breakers

8.2.1 The number of circuit breakers in 11 kV, 13.8 kV, 33 kV or 34.5 kV switchgears shall be per Single Line Diagram attached with the SOW/TS.

8.2.2 RMU shall be used to feed the second Station Service Transformer Substations as specified in the SOW/TS.

8.2.3 Unless otherwise specified in SOW/TS the continuous current ratings of circuit breakers and bus bars in switchgears rated 11 kV and above shall be standardized at design ambient temperature of 40ºC with natural cooling as specified in Table 02-4 below. For ambient temperatures higher than 40ºC, appropriate derating factors shall be considered for continuous current ratings of circuit breakers and bus bars in switchgears.

Table 02-4 : Continuous Current Ratings of circuit breakers and bus bars in Switchgears Rated 11 kV and Above

System Nominal Voltage (kVrms)	Rated Continuous Current (Arms)
380	3150, 4000
230	2000, 2500, 3150, 4000
132	1600, 2000, 2500, 3150, 3500
115 or 110	1600, 2000, 2500, 3150, 3500
69	1250, 1600, 2000, 2500 (indoor withdraw able live tank), 3150, 3500 (GIS)
33 or 34.5	630, 1250, 2500, 3150 (Forced cooling)
11 or 13.8	630, 1250, 2000, 2500, 3150, 3600 (Forced cooling for Air Insulated Metal Clad Switchgear)

8.2.4 Unless otherwise specified in project SOW/TS, system parameter for equipment/material shall be as specified in the following Table 02-5:

Table 02-5 : Equipment/Materials System Parameters

Nominal System Voltage kVrms	Rated Voltage for Equipment (Maximum System Voltage) kV	Three Phase Symmetrical System Current (kArms)	Short Circuit Current Duration (Sec)
11	12	25	(1 or 3)*
13.8	(15 or 17.5)**	25	(1 or 3)*
33	36	25	1
34.5	36 (minimum)	25	1
69	72.5	31.5 or 40	1
110	123	40	1
115	123	40	1
132	145	40	1
230	245	63	1
380	420	63***	1

Note

* Shall be specified by design engineer

** For switchgear it shall be 17.5 kV and for other equipment it shall be as specified in the SOW/TS. For 13.8 kV Non-Extensible Ring Main Unit (RMU) with Tee-off Circuit breaker used for Station Service Transformers, the Three Phase Symmetrical Interrupting Current is 21kArms/ 1 sec

*** 50kA if required shall be specified in the SOW/TS.

.

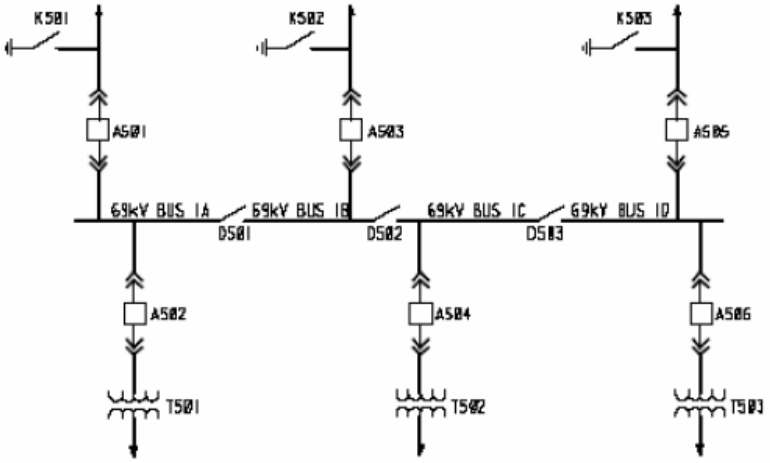

FIGURE-02-1 : TYPICAL 69kV SINGLE BUS ARRANGEMENT

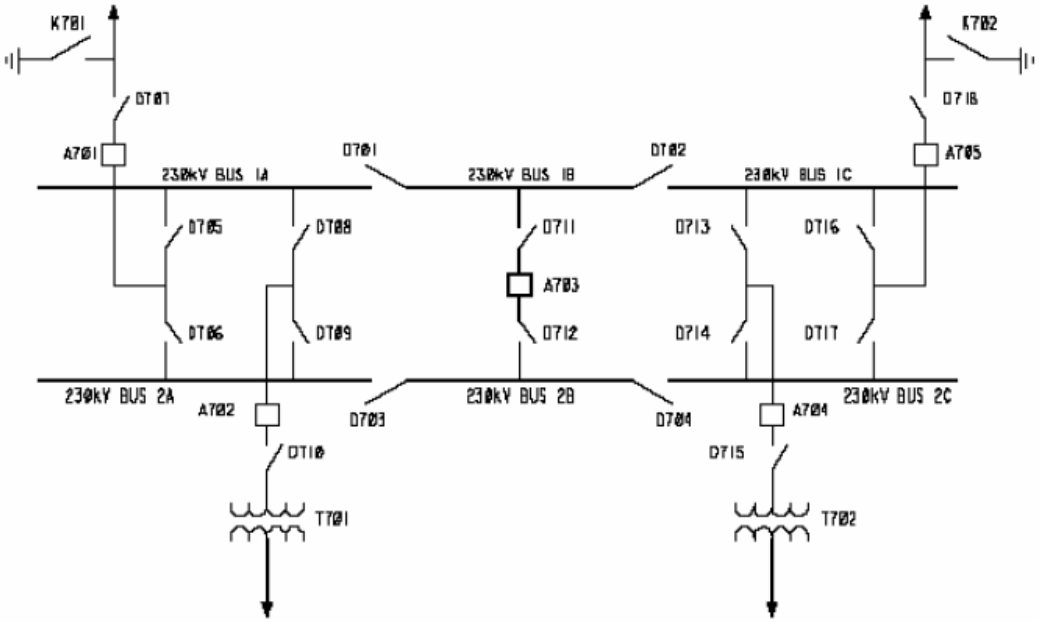

FIGURE-02-2 : TYPICAL 230kV DOUBLE BUS, SINGLE BREAKER ARRANGEMENT

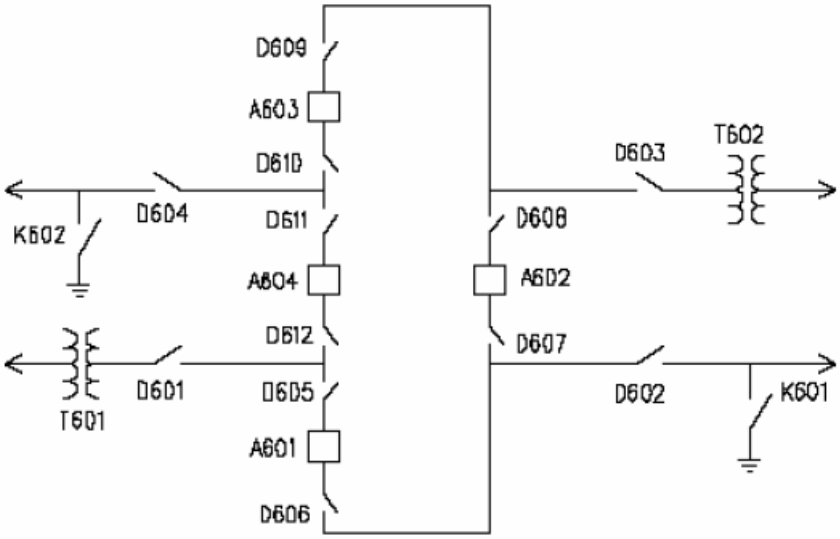

FIGURE 02-3 : TYPICAL 115kV RING BUS ARRANGEMENT

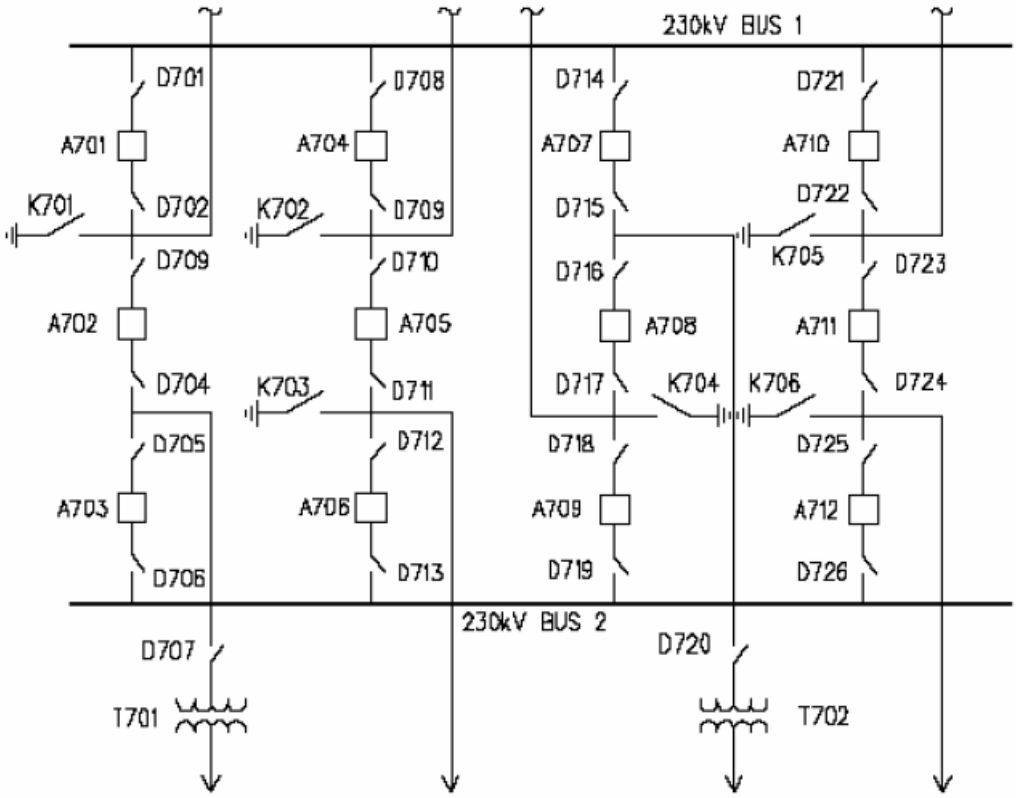

FIGURE 02-4 : TYPICAL 230kV BREAKER AND A HALF ARRANGEMENT

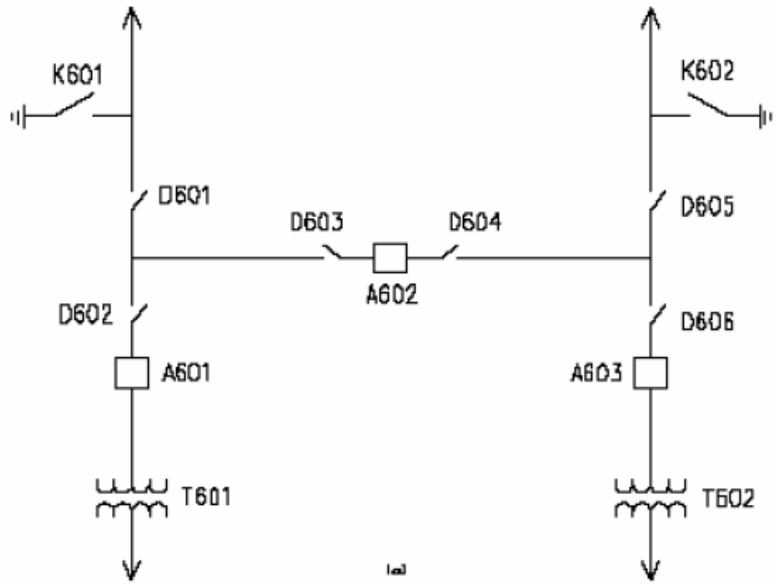

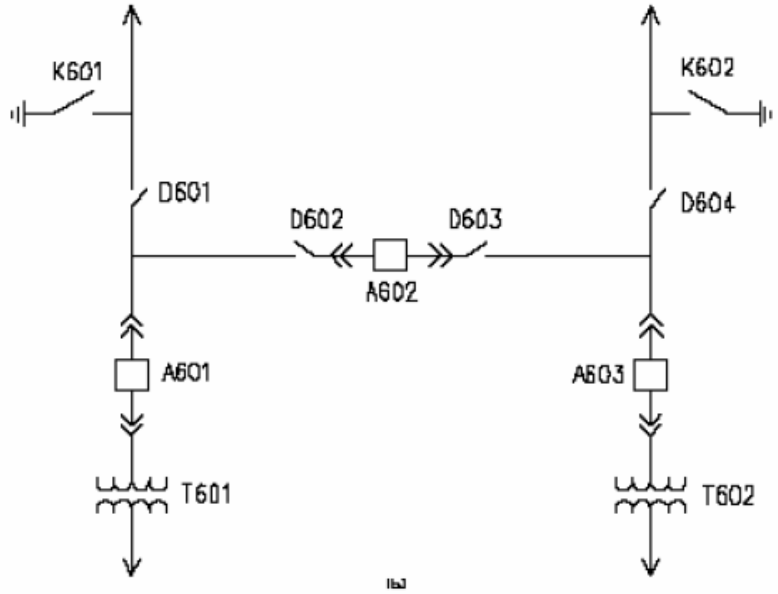

FIGURE 02-5 : TYPICAL 115kV PI ARRANGEMENT, a) WITH FIXED TYPE CIRCUIT BREAKERS, b) WITH DRAWOUT TYPE CIRCUIT BREAKERS

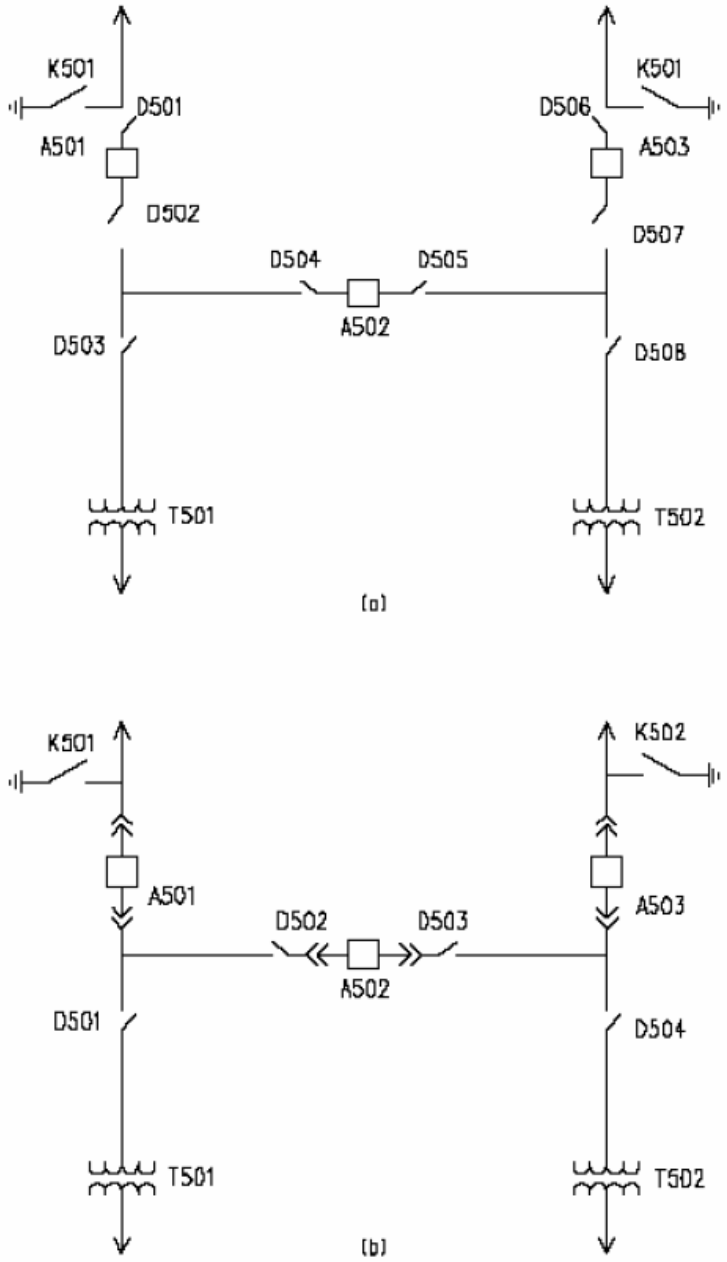

FIGURE 02-6 : TYPICAL 69kV INVERTED PIARRANGEMENT, a) WITH FIXED TYPE CIRCUIT BREAKERS, b)WITH DRAWOUT TYPE CIRCUIT BREAKERS

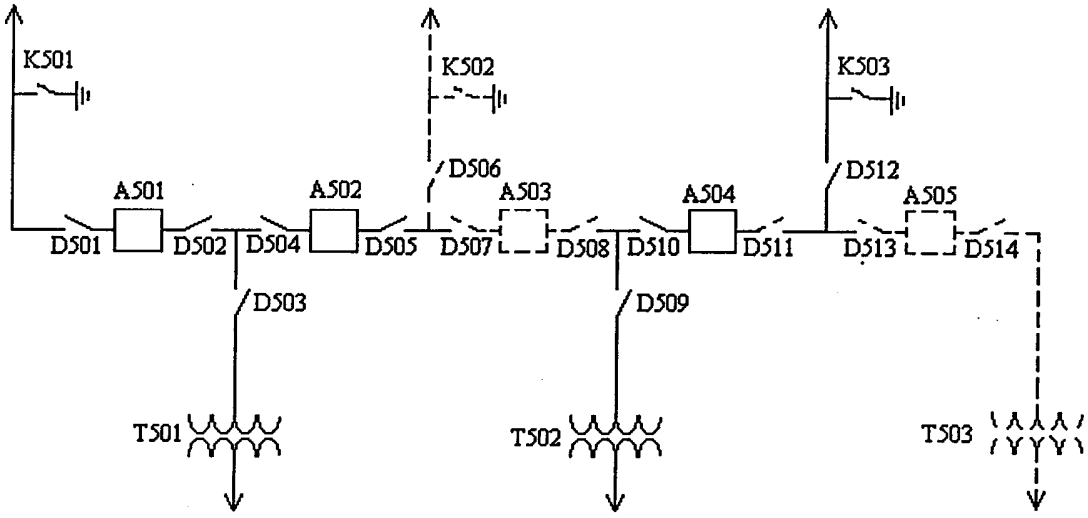

(a)

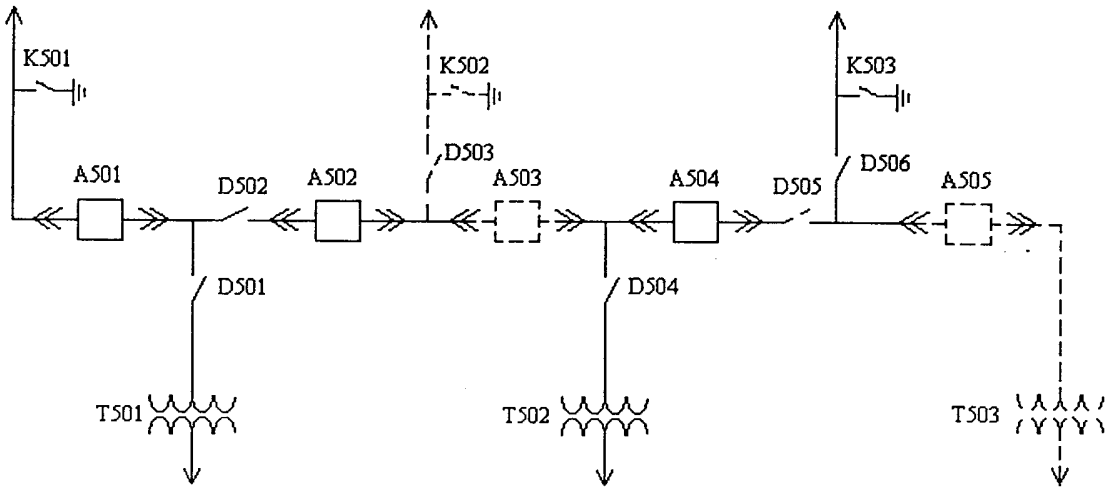

(b)

Figure 02-7 : Typical 69 kV Inverted PI Arrangement Planned to be Converted into Extended Inverted PI Arrangement (Future additions in dashed lines) , a) with Fixed Type Circuit Breakers, b) with Drawout Type Circuit Breakers

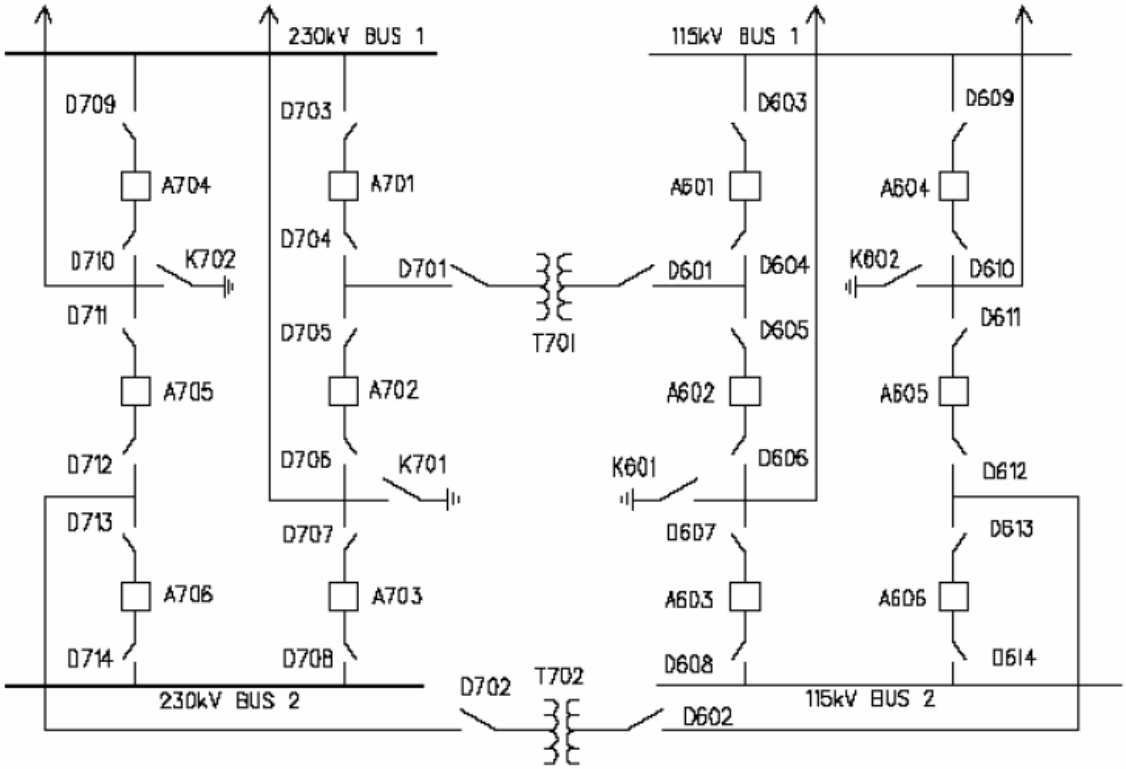

FIGURE 02-8 : TYPICAL DUAL VOLTAGE (230kV/115kV) BREAKER AND A HALF ARRANGEMENT

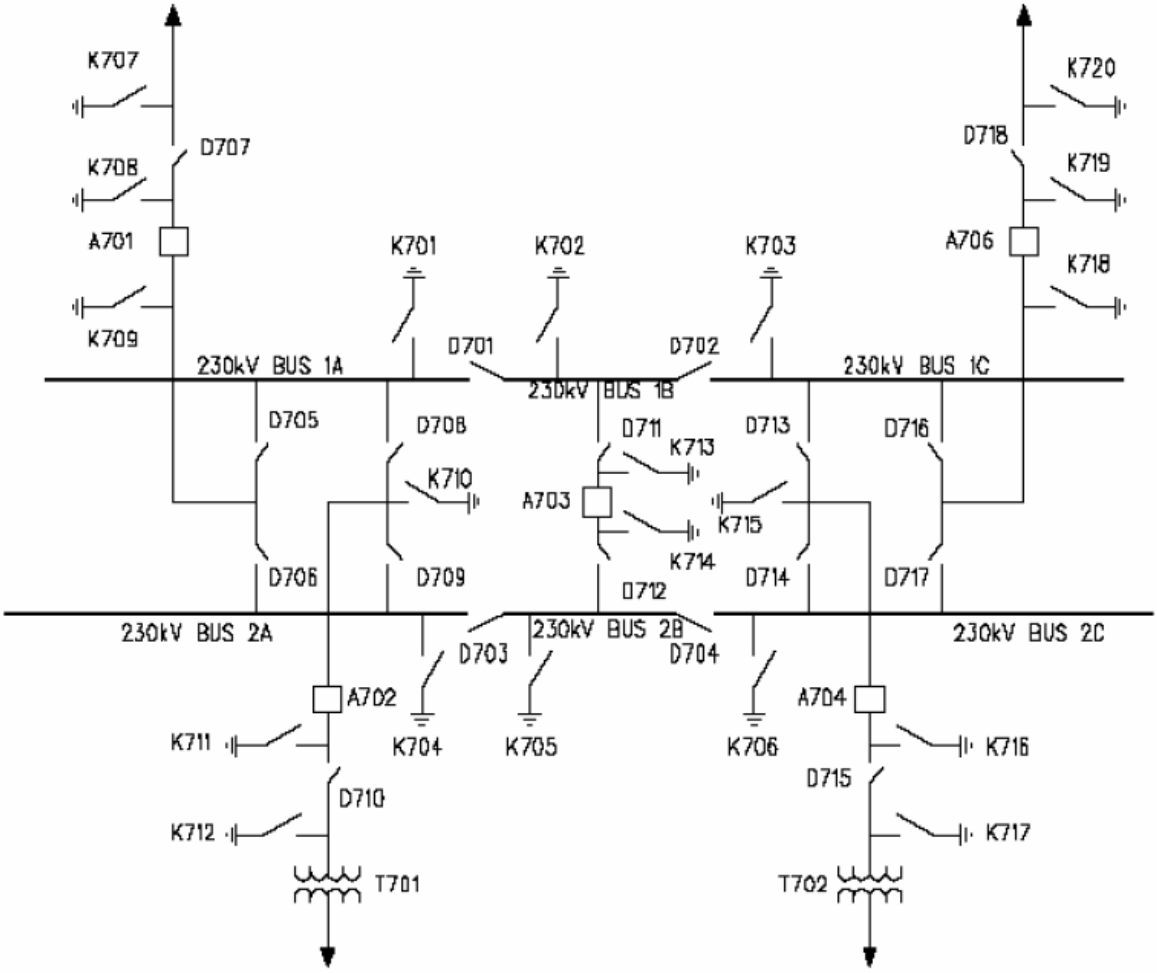

FIGURE 02-9 : TYPICAL 230kV GIS DOUBLE BUS, SINGLE BREAKER ARRANGEMENT

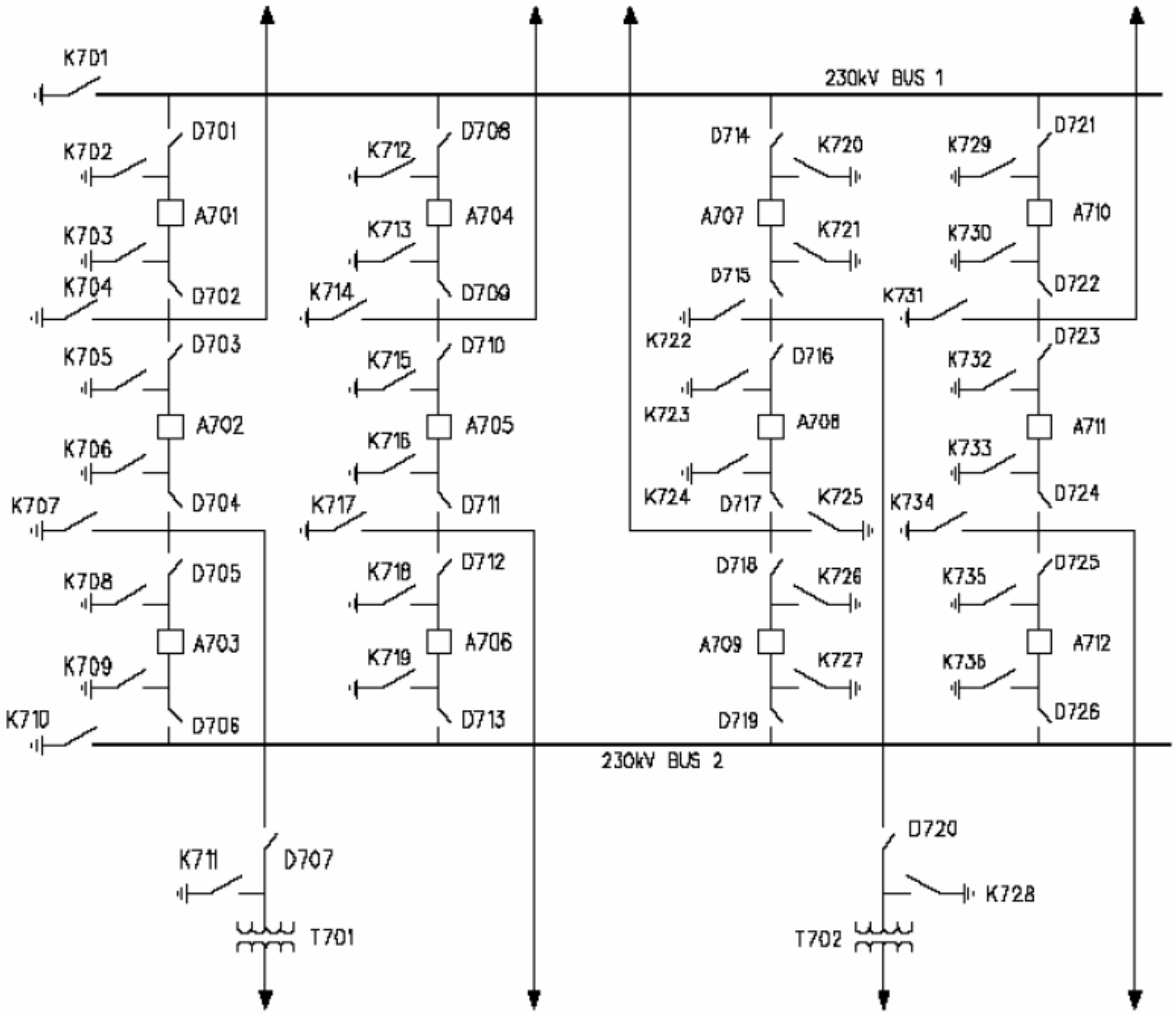

FIGURE 02-10 : TYPICAL 230kV GIS BREAKER AND A HALF ARRANGEMENT

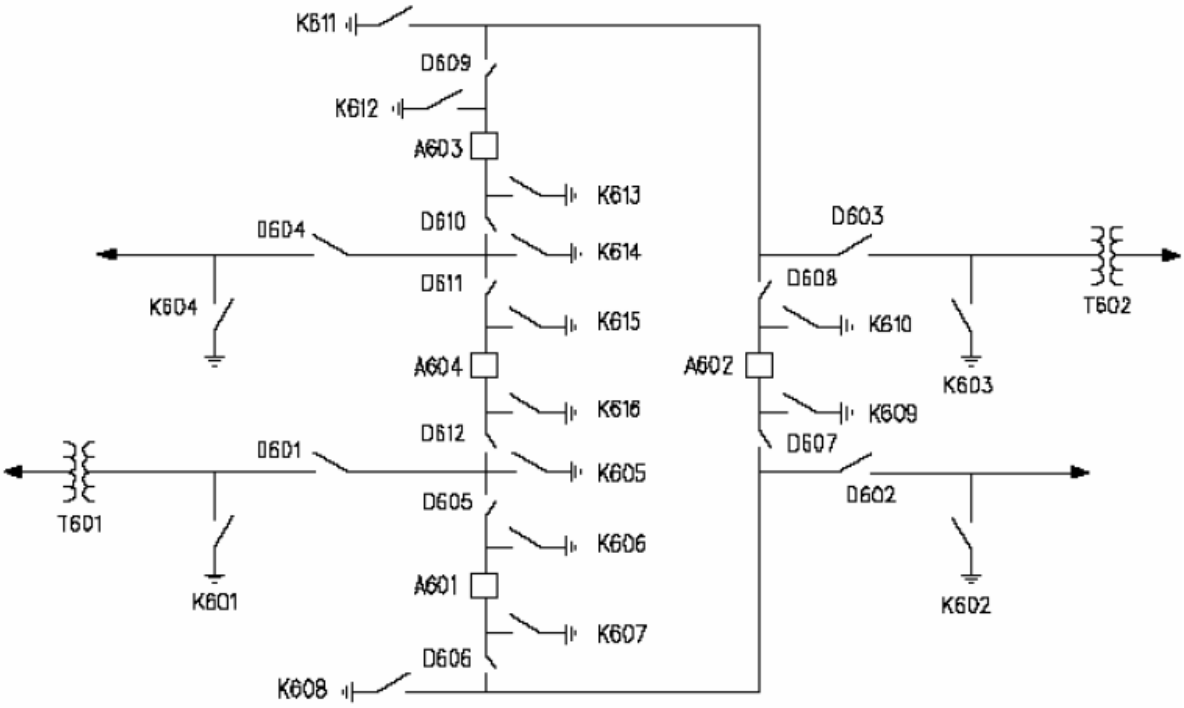

FIGURE 02-11: TYPICAL 115kV GIS RING BUS ARRANGEMENT

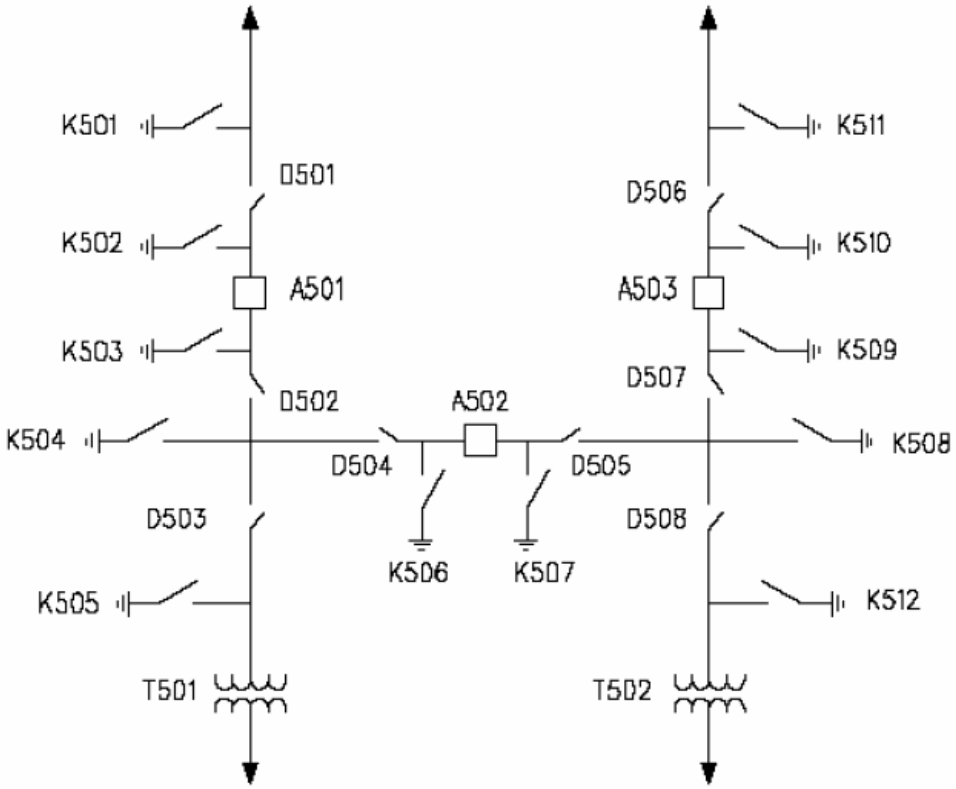

FIGURE 02-12: TYPICAL 69kV GIS INVERTED PI ARRANGEMENT

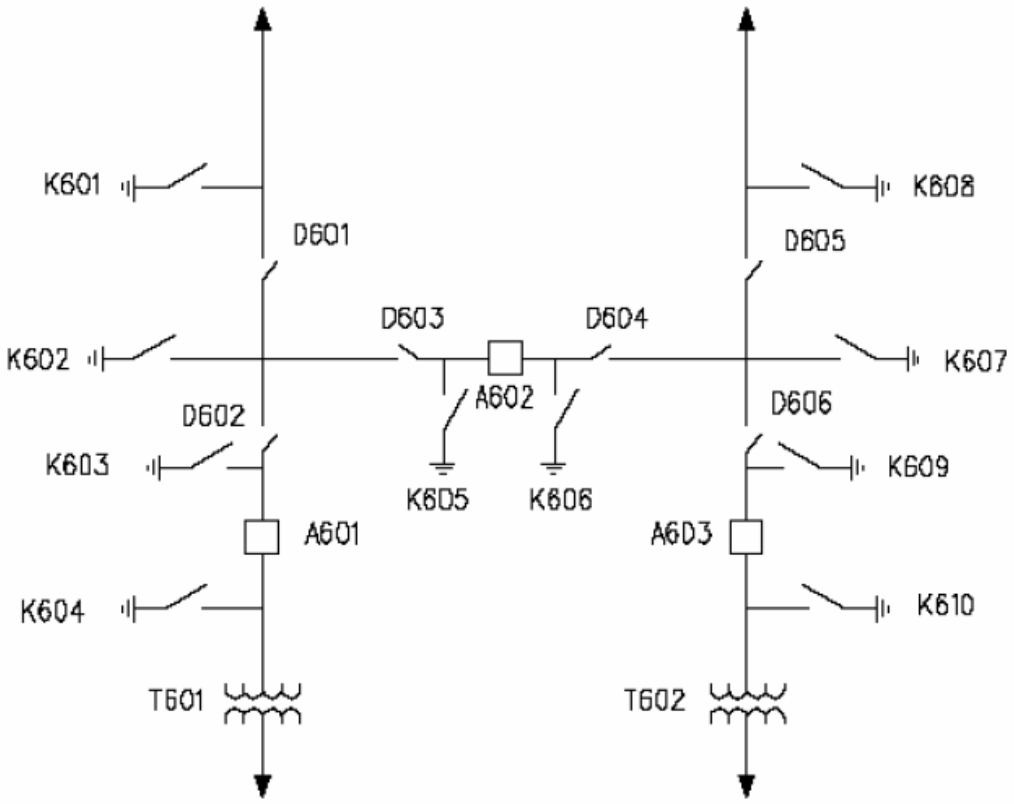

FIGURE 02-13: TYPICAL 115kV GIS PI ARRANGEMENT

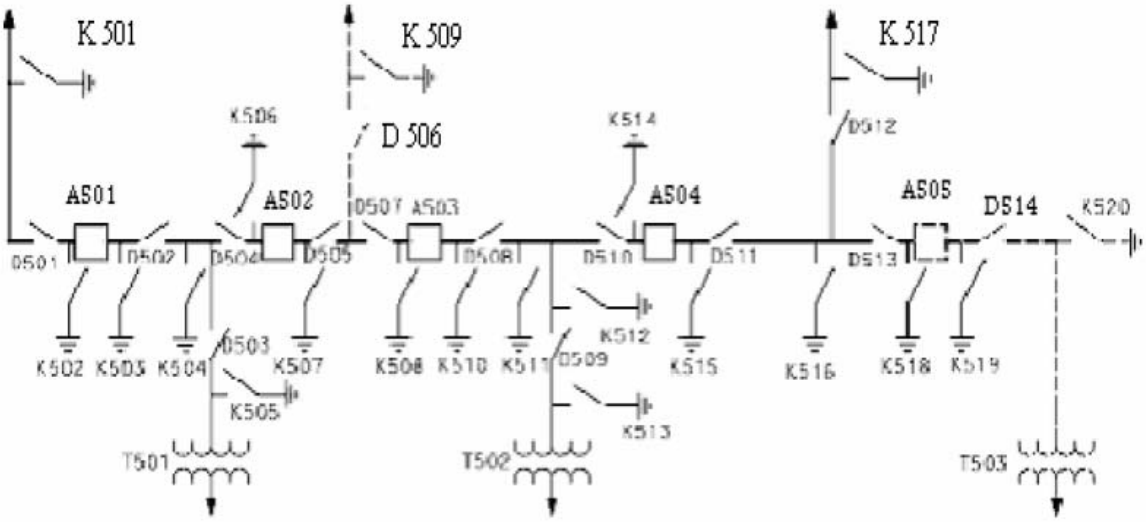

Figure 02–14. Typical 69kV GIS Extended Inverted PI Arrangement

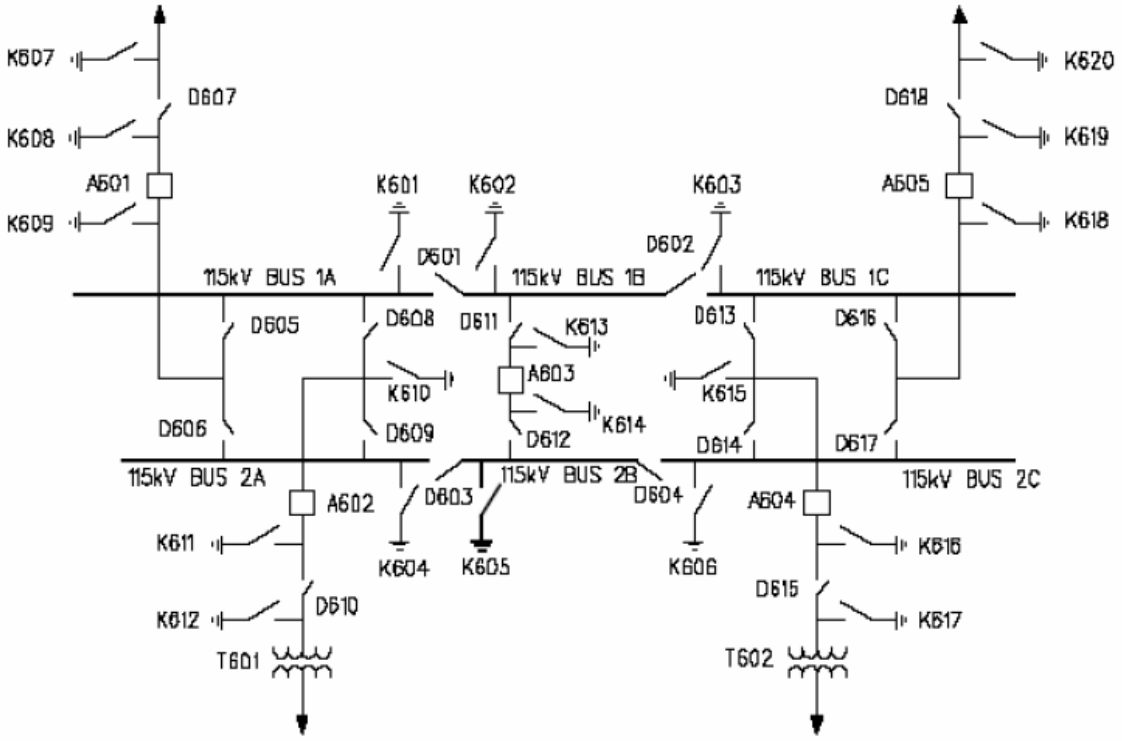

FIGURE 02-15: TYPICAL 115kV GIS DOUBLE BUS, SINGLE BREAKER ARRANGEMENT

BIBLIOGRAPHY

1. British Electricity International, "Modern Power Station Practice", Third Edition, Volume K:EHV Transmission, Pergamon Press, U.K., 1991.

2. Donald G. Fink and H. Wayne Beaty, "Standard Handbook for Electrical Engineers", Thirteenth Edition, Mc Graw-Hill, Inc., N.Y, 1993.

3. Electricity Utility Standards - Transmission, First Edition, 1408 (Amendments 1989).

4. Homer M. Rustebakke, General Electric Company, "Electric Utility Systems and Practices", Fourth Edition, John Wiley and Sons, Inc., USA, 1983.

5. M. Khalifa, "High Voltage Engineering, Theory and Practice", Marcel Dekker, Inc., N.Y., 1990.

6. Saudi Aramco, "Meteorologic and Oceanographic Data Book", Dhahran, KSA.

7. IEEE 519: Recommended Practices and Requirements for Harmonic Control in Electric Power Systems.

8. 01-TMSS-01, Latest Revision : General Requirements for All Equipment/Materials.

9. SASO 315: Noise.

10. IEEE C57.136: Guide for Sound Level Abatement and Determination for Liquid-Immersed Power Transformers and Shunt Reactors.

11. Electra # 179, CIGRE Joint Working Group 36.01/06: A Summary of Standards for Human Exposure to Electric and Magnetic Fields at Power Frequencies.