نقل الكهرباء
National Grid SA

ORIGINAL DOCUMENT APPROVED: October 16, 2006

REVISIONS

No.	Date	DESCRIPTION
1	December 25, 2016	Changes in the International Standards, modification of existing clauses and added new clauses
2		

TES-P-119.10

Revision No. 01

SUBSTATION GROUNDING

PROPRIETARY INFORMATION

This document contains proprietary information developed by and for exclusive use of National Grid Saudi Arabia. Your acceptance of the document is an acknowledgement that it must be used for the identified purpose/application and during the period indicated. It cannot be used or copied for any other purposes nor released to others without prior written authorization of National Grid Saudi Arabia. National Grid Saudi Arabia will not be responsible for misuse and/or misapplication, and any harm resulting there from. National Grid Saudi Arabia also reserves the right to take any necessary actions to protect its interest against unauthorized use.

ORIGINATED BY	CERTIFIED BY	APPROVED BY
Engr. Khaled Saad AlMutairi Division Manager (A), Substations Specifications	**Engr. Suliaman N. Al-Dosari** Department Manager, Standards & Specifications	**Engr. Mohammad S. Al-Rafaa** Vice President, Engineering
Date of Approval: December 25, 2016		

TRANSMISSION ENGINEERING STANDARD

TABLE OF CONTENTS

1.0 SCOPE

2.0 FUNCTION

3.0 BASIC SAFETY CONSIDERATIONS

4.0 BASIC DESIGN CONSIDERATIONS

5.0 EVALUATION OF GROUND RESISTANCE

6.0 SOIL RESISTIVITY MEASUREMENT
- 6.1 Measurement
- 6.2 Interpretation of Test Results
- 6.3 Backfilled materials

7.0 SELECTION OF GROUNDING CONDUCTOR MATERIAL, SIZE AND JOINTS
- 7.1 Basic Requirements
- 7.2 Minimum size of Grounding Conductor
- 7.3 Selection of Joints

8.0 BASIC ASPECTS OF GROUNDING SYSTEM DESIGN
- 8.1 Vertical Rods and Horizontal Conductors
- 8.2 Grounding Grid
- 8.3 Asphalt
- 8.4 Ground Rods
- 8.5 Connections
- 8.6 Precautions for Laying of Grounding Grid

9.0 DESIGN OF GROUNDING SYSTEM
- 9.1 Design Procedure
- 9.2 Use of Computer Analysis in Grid Design

10.0 PROTECTION AGAINST TRANSFERRED VOLTAGE
- 10.1 General
- 10.2 Communication Circuits
- 10.3 Rails
- 10.4 Utility Pipes and other Pipelines
- 10.5 Auxiliary Buildings
- 10.6 Portable Equipment

11.0 STRUCTURE AND EQUIPMENT GROUNDING REQUIREMENTS
- 11.1 General
- 11.2 Steel Structures and Switch Racks
- 11.3 Fence / Gates
- 11.4 Cables
- 11.5 Cable Tray System
- 11.6 Substation Buildings
- 11.7 HVAC

11.8 Control Cabinets, Operating Mechanism Housing, Box, etc.
11.9 Metallic Conduits
11.10 Circuit Breakers and Disconnect Switches
11.11 Operating Handles for Outdoor Switches
11.12 Terminal Transmission Tower Grounding
11.13 Lightning Masts
11.14 Re-closers
11.15 Ring Main Unit (RMU)
11.16 Oil Tanks and Oil / Water Piping
11.17 Metal Clad Switchgear
11.18 Grounding of Lighting Equipment
11.19 Temporary Grounding
11.20 Instruments, Relays and Meters

12.0 EQUIPMENT REQUIRING BOTH SAFETY AND SYSTEM GROUNDS
12.1 Power Transformers
12.2 Instrument Transformers
12.3 Surge Arresters
12.4 Station Auxiliary Transformer
12.5 Shunt Capacitors
12.6 Coupling Capacitor Voltage Transformers (CCVTs)
12.7 Oil Immersed Reactor
12.8 Air Core Series Reactor
12.9 Neutral Grounding Resistor
12.10 Neutral Grounding Transformer
12.11 Neutral Grounding Reactor
12.12 SVC & STATCOM
12.13 HVDC

13.0 CRITICAL SAFETY DESIGN PARAMETERS FOR GIS SUBSTATIONS

14.0 FIELD MEASUREMENT OF A CONSTRUCTED GROUNDING SYSTEM

15.0 CORROSION CONTROL

FIGURES:

Figure 10-1 Surface layer Derating Factor (C_s) Versus Thickness of Surface material (h_s)
Figure 10-2 Design procedure Block Diagram
Figure 10-3 Grounding Installation Details (Sheet 5)
Figure 10-4 Short Time Current Loading Capability (I_{CE}) of Concrete Encased Ground Electrode
Figure 10-5 Basic Shock Situations
Figure 10-6 Typical Metal-to-Metal Touch Situation in GIS
Figure 10-7 Typical Faults in GIS

16.0 BIBILIOGRAPHY
APPENDIX: SAMPLE DESIGN CALCULATIONS

1.0 SCOPE

This Engineering Standard establishes general guidelines, parameters and design criteria for the design and construction of a substation grounding intended to be used in the Transmission system of National Grid Saudi Arabia.

2.0 FUNCTION

2.1 A substation grounding is for the following functions:

2.1.1 System Grounding

a. To provide low fault impedance to the ground fault currents for prompt and consistent operation of protective devices during a ground fault and to limit potential rise of substation equipment.

b. To stabilize system neutral potential by grounding the neutrals of the equipment.

2.1.2 Safety Grounding

a. To provide means to carry electric currents into the ground under normal and fault conditions without exceeding any operating and equipment limits or adversely affecting continuity of service.

b. To assure that a person in the vicinity of grounded facilities is not exposed to the danger of critical electric shock.

3.0 BASIC SAFETY CONSIDERATIONS

3.1 Tolerable Body Current Limit

Shock current that can be survived by 99.5% of persons (weighing approximately 50kg) is governed by the following formula:

$$I_B = \frac{0.116}{\sqrt{t_s}} \qquad \text{(Eq.10-1)}$$

Where:

I_B = rms magnitude of tolerable shock current through the body in Amperes.
t_s = Duration of the current exposure in sec. (Shock duration).

3.2 Typical Shock Situations:

3.2.1 There are five (5) basic situations involving a person and grounded facilities during a fault. These are touch voltage (E_{touch}), step voltage (E_{step}), metal-to-

metal touch voltage (E_{mm}), mesh voltage (E_m) and transferred voltage (E_{trrd}). Technical terminology and their definitions are illustrated as below:

a) Touch Voltage (E_t):

The potential difference between the ground potential rise (GPR) of a ground grid or system and the surface potential at the point where a person could be standing while at same time having a hand in contact with a grounded structure.

b) Step Voltage (E_s):

The difference in surface potential that could be experienced by a person bridging a distance of "1m" with the feet without contacting any grounded object.

c) Metal to metal Touch Voltage (E_{mm}):

The difference in potential between metallic objects or structures within the substation site that may be bridged by direct hand-to-hand or hand-to-feet contact.

d) Mesh Voltage (E_m):

The maximum touch voltage within a mesh of a ground grid.

e) Transferred Voltage (E_{trrd}):

A special case of the touch voltage where a voltage is transferred into or out of the substation from or to a remote point external to the substation site.

f) Ground Potential Rise (GPR):

The maximum electrical potential that a substation ground grid may attain relative to a distant grounding point assumed to be at potential of remote earth. This voltage is equal to the maximum grid current multiplied by the grid resistance.

g) Transient Enclosure Voltage (TEV):

Very fast transient phenomena, which are found on the grounded enclosure of gas-insulated substation (GIS) systems.

h) X/R ratio:

Ratio of the system reactance to resistance. It is indicative of the rate of decay of any DC offset. A large "X/R ratio" corresponds to large time constant and a slower rate of decay.

i) Ground Grid:

A system of interconnected ground electrodes arranged in a pattern over a specified area and buried below the surface of the earth.

j) Ground Electrode:

A conductor imbedded in the earth and used for collecting ground current from or dissipating below the surface of the earth. Typical primary electrodes include such things as ground grids, counterpoise conductor, ground rods and ground wells.

k) Auxiliary Ground Electrode:

A ground electrode with certain design or operating constraints. Its primary function may be other than conducting the ground fault current into the earth. Typical auxiliary electrodes include underground metal structures and reinforcing bars encased in concrete, if connected to the ground grid. Auxiliary ground electrodes may have a limited current carrying capability.

l) Ground Mat:

A solid metallic plate or a system of closely spaced bare conductors that are connected to and often placed in shallow depths above a ground grid or elsewhere at the earth surface, in order to obtain an extra protective measure minimizing the danger of the exposure to high step or touch voltages in a critical operating area or places that are frequently used by people. Grounded metal grating, placed on or above the soil surface, or wire mesh placed directly under the surface material are common forms of a ground mat.

m) Grounding System:

Comprise all interconnected grounding facilities in a specific area.

n) Primary Ground Electrode:

A ground electrode specifically designed or adapted for discharging the ground fault current into the ground, often in a specific discharge pattern, as required by the grounding system design.

o) Equipment Earthing:

Earthing of all metal work of electrical equipment other than parts which are normally live or current carrying. This is done to ensure effective operation of the protective gear in the event of leakage through such metal work, the potential of which with respect to neighbouring objects may attain a value which would cause danger to life.

3.2.2 The transferred voltage (E_{trrd}) is approximately equivalent to ground potential rise (GPR), during fault condition, which is given by the following formula:

$$GPR = I_G \times R_g \qquad \text{(Eq.10-2)}$$

Where:

I_G = Maximum Grid Current in Amperes
R_g = Grid resistance in ohms

GPR shall be restricted to "5000V" to safeguard against transfer potentials. Communication circuits and electronic equipment shall be protected as per IEEE 487.

3.2.3 Basic shock situation is illustrated in Figure: 10-5 Typical metal-to-metal touch situation in GIS is illustrated in Figure: 10-6 and Typical fault in GIS is illustrated in Figure: 10-7.

3.3 Effect of Site Surfacing

The effect of site surfacing is to increase contact resistance between soil and the feet of a person. National Grid Saudi Arabia substation yard shall be surfaced with a "100mm" layer of high resistivity of "3000ohm-meter", asphalt material that extends "l.5 meters" outside the fence perimeter if space permits. If for some reasons it is impractical to asphalt the site surface, then 80mm to 150mm layer of gravel or high resistivity crushed rock shall be spread on the ground surface above the grounding grid with prior approval of National Grid Saudi Arabia.

3.4 Tolerable Step(E_{step}) and Touch Voltage (E_{touch}) Criteria

Tolerable step and touch voltages are given by the following formulae for a body weight of 50kg:

$$E_{step} = \frac{(1000 + 6 \times C_S \times \rho_S) \times 0.116}{\sqrt{t_S}} \qquad \text{(Eq. 10-3)}$$

$$E_{touch} = \frac{(1000 + 1.5 \times C_S \times \rho_S) \times 0.116}{\sqrt{t_S}} \qquad \text{(Eq. 10-4)}$$

$$E_{mm-touch50} = \frac{116}{\sqrt{t_S}} \qquad \text{(Eq. 10-5)}$$

Where:

1000 = Resistance of a human body in ohms from hand-to-both feet, from hand-to-hand, and from one foot to the other foot.

C_s = Reduction factor for derating the nominal value of surface layer resistivity. It is "1" for no protective surface layer (Protective layer resistivity equal to soil resistivity).
For protective surface layer of resistivity higher than soil resistivity, the value of "C_s is < 1". The actual value shall be determined by the following formula :

$$C_S = 1 - 0.09\left[\frac{1-\left(\frac{\rho}{\rho_S}\right)}{2\,h_s + 0.09}\right] \qquad \text{(Eq. 10-6)}$$

Where:

h_s = Thickness of the soil protective surface layer in meter

t_s = Duration of the shock current is in seconds. For National Grid Saudi Arabia applications, this shall be taken as "0.5 second". Wherever, the back-up clearing time "t_s" is "more than 0.5 second", then that shall be considered as special case. However, the maximum value of "t_s" shall not exceed "1.0 second".

ρ_s = Resistivity of the surfacing material in ohms-meter which ranges from 1000 to 5000 in value.

ρ = Soil resistivity (resistivity of earth beneath the surface material) in ohms-meter.

For all grounding design calculations the value of "C_s" can also be obtained from Figure 10-1.

where $K = \dfrac{\rho - \rho_s}{\rho + \rho_s}$

To ensure safety, the actual step voltage, touch voltage or metal-to-metal touch voltage or transferred voltage must be less than the tolerable limits.

4.0 BASIC DESIGN CONSIDERATIONS

The basic design consideration is to install a grounding system that will limit the effects of ground potential gradients within the tolerable level. This is normally achieved by the form of a grid of horizontally buried conductors, supplemented by a number of vertical rods connected to the grid.

4.1 Determination of Maximum Grid Current

The maximum grid current (I_G) is defined as follows:

$$I_G = D_f I_g \qquad \text{(Eq. 10-7)}$$

Where:

I_G = Maximum grid current in Amperes.

D_f = Decrement factor for the entire duration of fault (t_f) in seconds. This accounts for the asymmetry of the fault current, i.e. the effect of DC current offset. D_f depends on system X/R ratio and fault duration. For National Grid Saudi Arabia system with minimum shock duration of "0.5sec", value of D_f shall be "1".

I_g = R.M.S symmetrical grid current in Amperes. It represents the portion of the symmetrical ground fault current that flows between the grounding grid and surrounding ground. It can be expressed as follows:

$$I_g = S_f \times I_f$$

Where:

S_f = Current division factor relating the magnitude of fault current to that of its portion flowing between the grounding grid and surrounding ground. This factor is normally computed per IEEE 80. However for National Grid Saudi Arabia application, the minimum value of this factor shall be taken as "S_f =0.7" unless otherwise specified in the Project Technical Specification (PTS).

I_f = Breaker short circuit rating. If however there are constraints in accommodating the grid within the substation area then station ultimate ground fault current can be considered subject to National Grid Saudi Arabia approval.

NOTE : If however there are constraints in accommodating the grid within the substation area, methods indicated in clause 8.6.1 shall be adopted.

Taking the above definition into account maximum grid current I_G shall be:

$$I_G = S_f \times D_f \times I_f \qquad \text{(Eq. 10-8)}$$

4.2 Calculation of Mesh Voltage (E_m)

4.2.1 Mesh voltage E_m is represented by the equation:

$$E_m = \frac{\rho . K_m . K_i . I_G}{L_M} \qquad \text{(Eq. 10-9)}$$

Where:

ρ = Soil resistivity in ohm-meter

K_m = Spacing factor for mesh voltage

K_i = Corrective factor accounting for grid geometry

= 0.644 +0.148 x n

(Refer Eq. 10.10 for value of n)

L_M = L_C + L_R for grids with no ground rods, or grids with only a few rods scattered throughout the grid but none

located in the corner or along the perimeter of the grid.

or

$$= L_C + \left[1.55 + 1.22\left(\frac{L_r}{\sqrt{L_x^2 + L_y^2}}\right)\right] L_R$$

For grids with ground rods in the corner as well as along the perimeter and throughout the grid.

Where:

L_M	=	Effective buried length in meter
L_C	=	Total length of grid conductors in meter
L_R	=	Total length of ground rods in meter.
L_x	=	Maximum length of the grid in x direction in meter
L_y	=	Maximum length of the grid in y direction in meter
L_r	=	Length of each ground rod in meter

4.2.2 The geometrical factor K_m, is given by the expression:

$$K_m = \frac{1}{2\pi}\left[\ln\left(\frac{D^2}{16hd} + \frac{(D+2h)^2}{8Dd} - \frac{h}{4d}\right) + \left(\frac{K_{ii}}{K_h}\ln\frac{8}{\pi(2n-1)}\right)\right]$$

(Eq. 10.10)

Where

K_{ii} = Corrective weighting factor that adjusts the effect of inner conductors on the corner mesh

= 1 for grids with ground rods along the perimeter, or for grids with ground rods in the grid corners, as well as both along the perimeter and throughout the grid area

$= \frac{1}{(2n)^{2/n}}$ for grids with no ground rods or grids with only a few ground rods, none located in the corners or on the perimeter

K_h = Corrective weighting factor that emphasizes the effects of grid depth

= $\sqrt{1 + (h/h_o)}$, h_o = 1m (reference depth of grid)

D	=	spacing between parallel conductors in meters
d	=	diameter of the grid conductor in meter
h	=	depth of ground grid conductors in meters
n	=	Effective number of parallel conductors in a given grid
	=	$n_a.n_b.n_c.n_d$

Where:

$n_a = \frac{2.L_C}{L_p}$

n_b = 1 for square grids

n_c = 1 for square and rectangular grids.

n_d = 1 for square, rectangular and L-shaped grids.

Otherwise

$$n_b = \sqrt{\frac{L_p}{4.\sqrt{A}}}$$

$$n_c = \left[\frac{L_x.L_y}{A}\right]^{\frac{0.7.A}{L_x.L_y}}$$

$$n_d = \frac{D_m}{\sqrt{L_x^2 + L_y^2}}$$

Where:

D_m = Maximum distance between any two points on the grid in meter

A = Area of the grid in square meter

L_r = Length of each ground rod in meter

L_p = Peripheral length of the grid in meter

L_x = maximum length of the grid in x direction in meter

L_y = maximum length of the grid in y direction in meter

4.3 Calculation of Step Voltage (E_s)

4.3.1 Step voltage E_s, between a point above the outer corner of the grid and at a point one (1) meter diagonally outside the grid is given by the equation:

$$E_{step} = \frac{\rho.K_s.K_i.I_G}{L_s} \qquad \text{(Eq. 10.11)}$$

Where

L_s = Effective buried conductor length in meter

= $0.75\ L_C + 0.85\ L_R$ for grids with or without ground rods

4.3.2 For simplification, the maximum step voltage is assumed to occur at a distance equal to the grid depth (h) just outside the perimeter conductor. For the usual burial depth of 0.25m $\leq$ h $\leq$2.5m,

$$K_s = \frac{1}{\pi}\left[\frac{1}{2h} + \frac{1}{D+h} + \frac{1}{D}(1 - 0.5^{n-2})\right] \qquad \text{(Eq.10.12)}$$

5.0 EVALUATION OF GROUND RESISTANCE

5.1 The substation resistance depends primarily on the area to be occupied by the ground system, which is usually known in the early design stages.

The value of substation grounding resistance shall be calculated using the following formula :

$$R_g = \rho\left[\frac{1}{L_T} + \frac{1}{\sqrt{20\,A}}\left(1 + \frac{1}{1 + h\sqrt{20/A}}\right)\right] \qquad \text{(Eq. 10.13)}$$

Where

R_g	=	Substation ground resistance in "ohm"
ρ	=	Average ground resistivity in "ohm – m"
A	=	The area occupied by the ground grid in "m²"
L_T	=	The total buried length of conductors in "m". (In case of grid rod combination L_T shall be combined length of earthing conductor and ground rods).
h	=	Depth of grid in meters excluding asphalt covering if any. This value is used for calculations even in case the grid is partly embedded under the control building.

5.2 For substations, the ground resistance shall be equivalent to "1 ohm or less".

6.0 SOIL RESISTIVITY MEASUREMENT

6.1 Measurement

6.1.1 A number of measuring techniques are described in detail in IEEE 81. The Wenner's four-pin method as described in IEEE 81 shall be used for measurement of soil resistivity. As many readings as required for various spacing and depth, in all the eight directions, sufficient to model the soil shall be carried out.

6.1.2 Test probe spacing and the measurement values shall be submitted in a tabular form for National Grid Saudi Arabia approval.

6.1.3 For National Grid Saudi Arabia substation design, soil resistivity readings shall normally be taken under dry conditions, during summer months, if possible, however the same shall not affect the project's schedule.

6.1.4 Fill up soil resistivity shall be carried by soil modeling in laboratories on samples dried to 2% moisture content after compaction.

6.1.5 Soil resistivity measurement shall also be carried out before and after fill up and compaction of soil at site.

6.1.6 Range of Earth Resistivity will be as follows:

Type of earth	Average resistivity (Ω-m)
Wet organic soil	10
Moist soil	10^2
Dry soil	10^3
Bedrock	10^4

6.2 Interpretation of Test Results

For soils with resistivity value less than "500 Ohm-meter", if the difference between the highest and the lowest readings are within 30%, then the soil can be considered as uniform soil. For soils with resistivity value "greater than 500 Ohm-meter", if the difference between the highest and the lowest readings are within 20%, then the soil can be considered as uniform soil. For uniform soils, the mean value shall be considered as soil resistivity value. In case of wide variations in field readings, computer software alone shall be used to simulate two-layer model or multi-layer soil model. Two-layer soil models are good approximation of many soil structures, while multi-layer soil models may be used for more complex soil conditions. Software shall be based on IEEE-80. For Uniform soils manual and/or software calculations are acceptable.

6.3 Backfill Materials

Backfill material shall have possibly the same soil resistivity or better than that of the original soil. In case of considerable backfill the soil resistivity shall be taken after completion of the backfill compaction. The same shall be used for grounding calculations. In case of delay of backfill activity at site the estimated value of resistivity of the backfill material or that of the existing soil whichever is higher shall be used for grounding calculations.

7.0 SELECTION OF GROUNDING CONDUCTOR MATERIAL, SIZE AND JOINTS

7.1 Basic Requirements

7.1.1 Copper material shall be used for grounding. Since a grid of copper forms a galvanic cell with the buried steel structures, pipes, etc., and hastens the corrosion of steel structures, precautionary measures need to be taken in order to reduce the cell potential as per clause 15.0.

7.1.2 Soft drawn, stranded copper shall be used for the ground grid conductors. The conductor shall be round shaped for maximum cross-sectional contact with the ground. In coastal zone with low soil resistivity, tinned copper conductor shall be used. Copper-clad steel shall be used for ground rods.

7.1.3 Each element of the ground system (including grid, proper connecting ground leads and electrodes) shall be so designed that it shall:

a) Resist fusing and deterioration of electric joints under the most adverse combination of fault-current magnitude and fault duration to which it might be subjected.

b) Be mechanically rugged to a high degree, especially in locations exposed to physical damage

c) Have sufficient conductivity so that it will not contribute substantially to dangerous local potential differences.

7.2 Minimum Size of the Grounding Conductor

The following equation shall be used to evaluate the minimum conductor size (in mm²) as a function of conductor current:

$$A_{mm^2} = \frac{I_f}{\sqrt{\left(\frac{TCAP \times 10^{-4}}{t_c\,\alpha_r\,\rho_r}\right)\ln\left(\frac{K_0 + T_m}{K_0 + T_a}\right)}} \qquad \text{(Eq.10.14)}$$

where:

I_f = Symmetrical ground fault current in "kA". (For National Grid Saudi Arabia system this value shall be breaker rated short circuit current)

A = Conductor cross section in "mm²"

T_m = Fusing temperature in (maximum allowable temperature) in "°C"

T_a = Ambient temperature in "°C"

α_r = Thermal coefficient of resistivity of conductor material at reference temperature T_r in "1 / °C"

ρ_r = Resistivity of the ground conductor at referenced temperature T_r in "micro-ohms cm"

t_c = Maximum possible clearing time. This shall be taken as "1.0 (one) second".

TCAP = Thermal capacity factor from Table 10-1 in "J/cm³.°C"

K_0 = $\frac{1}{\alpha_0}$ or $K_0 = \frac{1}{\alpha_r} - T_r$, in "°C" where

T_r = reference temperature for material constants in "°C"

α_r = thermal coefficient of resistivity of conductor material at "0 °C in 1/ "°C"

Note that α_r and ρ_r are both to be found for the same reference temperature. Table 10-1 provides the material constants for stranded, annealed, soft copper wire at 20°C.

Table 10-1: Material Constants for Stranded, Annealed, Soft Copper Wire

Description	Material Conductivity (%)	α_r factor at 20ºC (1/ºC)	K_0 at 0ºC	Fusing Temperature T_m (ºC)	ρ_r 20ºC (µΩ-cm)	TCAP thermal capacity J/ (cm^3.°C)
Copper, annealed soft-drawn	100.0	0.00393	234	1083	1.7241	3.422

Table 10-2: Recommended Ground Copper Conductor Sizes

Description	Sizes to be used (mm^2)
Conductor size for Equipment Ground	95, 120, 240, 2x240
Conductor for Main Ground Grid, Embedded system	120 (for 25kA & 31.5kA), 150 (40kA), 185 (50kA), 240 (63kA)

Note: The final choice of conductor after calculation shall be from the nearest higher sizes shown in Table 10-2.

7.3 Selection of Joints

7.3.1 The joints shall meet all the requirements of IEEE Std. 837 "Qualifying Permanent Connections Used in Substation Grounding". Necessary tests per this standard shall be carried out for the connections. All bolted and compression joints shall withstand a maximum temperature of 250ºC.

7.3.2 All exothermic connections shall be bitumastic painted and mastic taped.

7.3.3 Outdoor Joints

a) Buried Joints:

Exothermic welded joints shall be used on buried ground grid (cross-over points, etc.), which make the connections an integral part of the homogenous conductor.

b) Open Air Joints:

For outdoor equipment or structures, above grade joints of pigtails with the respective connectors shall be compression (lug) type and the connector in turn shall be bolted to the respective equipment, structures, etc. All joints, which are part of ground grid network, shall be exothermic.

7.3.4 Indoor Joints

a) Equipment grounding joints:

For equipment installed inside the substation buildings, equipment grounding conductor shall be provided with compression lug at equipment end. The lug in turn shall be bolted to the equipment joints. The connection to the grounding grid at the other end can be bolted, similar to equipment end, only when it is not possible to have an

exothermic joint. In all other cases the connections with the indoor grounding grid shall be exothermic only.

b) Other Joints

All other joints such as ground bar to ground bar etc., routed in indoor substation building shall be exothermic. When there is difficulty in carrying out exothermic joints, then brazed or bolted connections can be considered subject to National Grid Saudi Arabia prior approval.

8.0 BASIC ASPECTS OF GROUNDING SYSTEM DESIGN

8.1 Vertical Rods and Horizontal Conductors

The grounding system shall limit the ground potential gradient to a tolerable level. This is achieved by a combination of network of interconnected horizontally buried conductors and vertically buried ground rods connected to each other and to all equipment neutrals, frames and structures.

8.2 Grounding Grid

8.2.1 The grounding grid shall encompass all of the area within the fence (grounding grid shall not be laid below the basement unless otherwise required because of space constrain and subject to National Grid Saudi Arabia approval) and shall extend at least l.5 meters outside the substation fence on all sides (if space permits), including all gates in any position (open or closed) to enclose as much ground as practicable and to avoid current concentration and hence high gradients at the grid periphery. A perimeter grid conductor shall also surround the substation buildings, at a distance of “0.5 - 1.5 meters”.

8.2.2 In case of substations with boundary wall, when it is not possible to extend the grounding grid beyond 1.5 meters, then the outer grid can coincide with boundary wall perimeter. However in this case necessary calculations for touch and step voltage profiles near the boundary wall shall be furnished and safety shall be ensured.

8.2.3 Grounding grid shall be buried at a depth ranging from “0.5 to 1.5 meters” below final ground grade (excluding asphalt covering).

8.2.4 The grounding grid conductors shall preferably be laid, as far as possible, at reasonably uniform spacing. Depending upon site conditions, typical spacing of the main conductors generally ranges between “3 meters to 15 meters”. In congested areas, reduced intervals may be desirable. Grid spacing shall be halved around the perimeter of the grid to reduce periphery voltage gradients. It may also be desirable to subdivide the corner meshes into quarter areas to reduce the normally higher mesh voltages at such locations.

8.2.5 Reinforcement bars in concrete slabs, foundations and duct banks shall be connected to the grounding grid by using appropriate thermos weld joints. However care should be taken to ensure that no discharge current shall flow through the reinforcement bars to the grounding grid.

8.2.6 Main conductors and secondary conductors shall be bonded at points of crossover by thermos weld process.

8.3 Asphalt

The entire area inside the fence, and including a minimum of "l.5 meters" outside the fence (if space permits), shall be surfaced with asphalt as given in clause 3.3. For National Grid Saudi Arabia grounding grid design, soil resistivity of asphalt of "3000 Ω-m" shall be considered.

8.4 Ground Rods

8.4.1 Ground rods shall have minimum diameter of "l5mm φ" and the size shall be selected for breaker short circuit rating. The standard length of the ground rod shall be "3.0 to 3.6 meter". However, for many GIS substations, other space-limited installations and at locations where relatively low resistivity is experienced at depths "below 3 meters", extra-long rods may be considered. For two layer and multi-layer soil models, where the upper layer has high soil resistivity, deep driven rods shall be considered so that the rod is in contact with low resistivity lower soil layer.

8.4.2 Ground rods shall be installed with their top "50cm" minimum below grade and bonded to the grounding grid by thermos weld process.

8.4.3 Ground rods shall, in general, be installed at all points in the grid as defined above, in particular, one for each surge arrester connection, two for power transformer neutral and one for service transformer neutral. where large ground currents may be expected. The rods installed predominately along the grid perimeter will considerably moderate the steep increase of the surface gradient near the peripheral meshes.

8.5 Connections

8.5.1 Once the conductors are placed in their trenches, the required connections are then made. Generally, the points of crossing require a cross type connection, while tee connections are used for taps to a straight conductor run located along the perimeter.

8.5.2 Pigtails are left at appropriate locations for grounding connections to structures or equipment. The pigtails are then readily accessible after backfilling for the above grade connections.

8.5.3 Prior to backfilling, the installation of the ground rods shall be accomplished.

8.6 Precautions for Laying of Grounding Grid

8.6.1 When there is restriction in space to lay grounding grid within a substation then grounding grid can be additionally embedded in Switchgear and Control Room basement also with the approval from National Grid Saudi Arabia. If this does not still satisfy the grounding design requirements then the system ultimate ground fault current shall be considered for the design subject to approval from National Grid Saudi Arabia. However care shall be taken to ensure that no discharge current flows through reinforcing bars.

8.6.2 Grounding grid shall not be laid beneath power and station service transformer foundation, unless otherwise required because of space constraint and subject to National Grid Saudi Arabia approval. Grounding grid may be embedded in the base slab of oil catch basin.

9.0 DESIGN OF GROUNDING SYSTEM

9.1 Design Procedure

The block diagram of Figure 10-2 illustrates the sequence of steps to design the grounding grid.

9.1.1 Step 1: The general location map shall provide information of the substation area to be grounded. Soil resistivity test shall be carried out using Wenner's four pin method described in IEEE Std. 81.

9.1.2 Step 2: The minimum conductor size shall be determined using Eq. 10.14.

9.1.3 Step 3: The tolerable step and touch voltages shall be determined using Eqs. 10.3 and 10.4.

9.1.4 Step 4: The preliminary design shall include a conductor loop surrounding the entire grounding area, plus adequate cross conductors to provide convenient access for the equipment grounds etc. The initial estimate of conductor spacing and ground rod locations shall be based on I_G and the area being grounded.

9.1.5 Step 5: The resistance of the system grounding (R_g) in uniform soil shall be determined using Eq. 10.13. However for two layer and multi-layer soil, computer analysis based on modeling the grounding system shall be used to compute the resistance.

9.1.6 Step 6: Maximum value of grid current I_G shall be determined using Eq. 10.7.

9.1.7 Step 7: If the GPR of the preliminary design, calculated using Eq. 10.2, is below the tolerable touch voltage, no further analysis is necessary. Only additional conductor required to provide access to equipment grounds is necessary.

9.1.8 Step 8: However, in case the safety criterion of "Step 7" is not met, then the mesh and step voltages shall be calculated using Eqs. 10.9 and 10.11.

9.1.9 Step 9: If the calculated mesh voltage is below the tolerable touch voltage, the design may be complete. However, if the calculated mesh voltage is greater than the tolerable touch voltage, then the preliminary design need to be revised [see Step (11)].

9.1.10 Step 10: If both the calculated touch and step voltages are below the tolerable voltages, the design needs only refinements required to provide access to equipment grounds. If not, the preliminary design must be revised [see Step (11)].

9.1.11 Step 11: If either the step or touch tolerable limits are exceeded, revision of the grid design is required. These revisions may include smaller conductor spacing, additional ground rods, etc.

9.1.12 Step 12: After satisfying the step and touch voltage requirements, additional grid conductors and ground rods may be required. The additional grid conductor may be required, if the grid design does not include conductors near the equipment to be grounded. Additional ground rods may be required at the base of surge arresters, transformer neutrals, etc. The final design shall be reviewed to eliminate hazards due to transferred potential.

9.2 Use of Computer Analysis in Grid Design

Computer algorithms alone shall be used in complex situations for designing grounding system such as two layer models, multi-layer models, unsymmetrical grids etc. Computer programs shall be in compliance to clause 16.8 of IEEE-80 and computer programs shall be approved by National Grid Saudi Arabia.

10.0 PROTECTION AGAINST TRANSFERRED VOLTAGE

10.1 General

Hazards from external transferred voltages are best avoided by using isolating or neutralizing devices and by treating and clearly labeling these circuits, pipes, etc. as being equivalent to live lines. The isolation devices or the insulation provided must be capable of withstanding the magnitude of the transferred voltage.

10.2 Communication Circuits

For communication circuits, protective schemes involve the use of protective devices to safeguard personnel and communication terminal equipment. Communication Master Ground Bar shall be bonded to station grounding grid. Modern approach, however, favors the use of fiber optic circuits, which eliminate the transfer of high voltages. Refer IEEE 487 for more details.

10.3 Rails

Hazards can be avoided by installing several insulating joints in the rails leaving the grid area (if applicable).

10.4 Utility Pipes and other Pipelines

All metallic utility pipes and other metallic pipelines such as rain water pipelines shall always be tied to the substation's grounding system. To ensure that GPR is not transferred outside the substation plot area, all metallic utility pipes and other pipelines emanating out of the substation shall be provided with insulated connection at the point of leaving the substation. The insulating sections must be capable of withstanding the maximum electrical potential that a substation grounding grid may attain relative to a distant grounding point assumed to be potential of remote earth. Necessary proposal shall be submitted to National Grid Saudi Arabia for approval.

10.5 Auxiliary Buildings

Buildings in the substation, especially if linked to it via water pipes, cable sheaths, etc., must be treated as a part of the substation and shall be grounded using the same safety criteria as the substation.

10.6 Portable Equipment

It is a common practice to isolate the supply circuits for portable equipment and their associated tools from the substation ground to avoid a hazardous transferred voltage, which otherwise might appear between the equipment and the nearby ground. For this purpose, separate grounds are provided at the site of work or portable generators may be used.

11.0 STRUCTURE AND EQUIPMENT GROUNDING REQUIREMENTS

11.1 General

The grounding connections provided to substation equipment and structures fall under two categories, namely:

11.1.1 Safety Grounds

11.1.2 System Grounds

System ground is normally for neutral grounding and safety ground is for equipment grounding. Minimum conductor size for equipment safety grounding shall be per Table 10-3. All safety ground termination shall be made directly on to the ground grid. All system ground shall be terminated on to a ground rod interconnected to the grounding grid.

11.2 Steel Structures and Switch Racks

Switch racks and every steel structure that supports insulators or electrical equipment shall be grounded by means of bolted connections at two (2) diagonally opposite legs. Equipment mounted on steel supporting structures shall have separate grounding conductors. The pigtail ground conductor shall be supported on the structure at 1.0 meter intervals by clamps as shown in "Figure 10-3, detail 5". Casting pigtail conductor inside the steel structure concrete foundation is not acceptable.

11.3 Fences / Gates

11.3.1 If space permits a perimeter ground conductor shall be laid which follows the fence line and the gate in any position (open or close) at a distance of 0.5 - 1.5 meter beyond (outside) the fencing. The perimeter ground conductor and the fence then shall be bonded electrically at corner posts, gate posts and every alternate line post. The gates shall be bonded to the gateposts with a flexible copper cable or braid. See "Figure 10-3, detail 6".

11.3.2 The barbed wire on the top of the SSD (Safety and Security Directive) type fence / boundary wall, if applicable, shall be bonded to the grounding grid at every 21 meter intervals.

11.4 Cables

Metallic cable sheaths shall be effectively grounded by connecting a flexible braid to the sheath to eliminate dangerous induced voltages to ground.

11.4.1 Control Cables

Metallic sheath of control cables shall be grounded at both ends to the grounding grid via. ground busbar in the cubicle.

11.4.2 Power Cables

a) Sheath of Power cables rated 69kV to 380kV shall be grounded per TES-P-104.08.

b) Grounding of sheath of single core cables rated for 34.5kV and 13.8kV shall be based on TES-P-104.08. Sheath of three core cables rated for 13.8 kV shall be grounded at both ends.

c) If ring type CTs are installed on power cables, the grounding of sheath shall be done such that the sheath current to ground will not influence CT secondary current.

11.4.3 Instrument Cables

Instrument cables carrying analog or digital signals shall have their metallic screening grounded at one point by means of PVC insulated grounding wire

connected to separate instrument ground bar which is insulated from cubicle ground.

11.4.4 Signal Cables

All signal cables used in telemetering and communications shall have their shield grounded at one end only to reduce interference from stray sources.

11.5 Cable Tray System

Cable tray system shall be grounded with bare copper conductor of "50mm² size" at both ends and shall be bonded across gaps including expansion gaps (See Figure 10-3, Detail 7).

11.6 Substation Buildings

11.6.1 Substation buildings shall be encircled by a grounding conductor. Reinforcement bars of the substation buildings and equipment foundation in the yard shall be connected to the main grounding grid at least at two diagonally opposite points.

11.6.2 For grounding of the electrical apparatus installed inside substation buildings two separate exposed copper conductors / strips of size per Table 10-3, each connected to the grounding grid at two (2) different points shall be laid. The grounding grid shall be laid inside the substation buildings and it shall be connected to the main grid outside the buildings, at minimum two points as shown in "Figure 10-3, detail 8".

11.6.3 Metal building(s) shall be grounded at each substructure column with a minimum size of "l20 mm² bare copper conductor".

11.6.4 Angle irons installed on indoor trenches to support the metallic covers shall also be grounded at both ends. Metallic doors in substation buildings shall be grounded with a flexible copper cable or braid.

11.7 HVAC

11.7.1 All air conditioning ducts inside the control building(s) shall be grounded at both ends and cross bonded at all joints and across the non-metallic duct connecting Air Handling Unit (AHU).

11.7.2 Grounding of control panels and other equipment associated with HVAC shall be per respective specifications.

11.8 Control Cabinets, Operating Mechanism Housing, Box, etc

11.8.1 All the metallic enclosures of boxes / cabinets shall be connected to the grounding grid through the grounding terminals.

11.8.2 The door(s) of all cabin, junction boxes, etc., shall be bonded to the respective housing with a flexible copper conductor.

11.8.3 A copper ground bus of minimum "95mm^2 size" shall be provided inside these cabinets. All grounding connections from individual items including motor frames shall be connected directly, but separately, to this grounding bus. Size of grounding connections shall be "95mm^2".

11.9 Metallic Conduits

All metallic conduits shall be connected to the grounding grid at each manhole or at terminating points by using a conductor size of "50mm^2". Conduits terminating in metal junction boxes shall be grounded by means of grounding studs or brazed connections. Where several conduits or junction boxes are located adjacent to each other, an adequately sized solid wire shall be used to interconnect the boxes. It shall be connected to grounding system at one single point.

11.10 Circuit Breakers and Disconnect Switches

All circuit breakers and disconnect switches shall be grounded at two diagonally opposite corners from two separate points of the grounding grid. Further grounding switch blades of Disconnect Switch shall be directly grounded to grounding grid. Good electrical connection shall be maintained between the steel structure and any bolted accessories mounted on it.

11.11 Operating Handles for Outdoor Switches

11.11.1 A large percentage of fatal accidents from voltage gradients are associated with manual operating handles of disconnect switches, etc.

11.11.2 A metal grounding plate or mat (operating platform), shall be placed where the operator must stand on it to operate the device. The operating handles shall be grounded by connecting a ground conductor (preferably flexible wire, braid strap) from the vertical operating pipe to the supporting structure, then continuing another stranded ground conductor to the switch operating platform. It is reiterated that the operating handle and the platform shall not be directly connected to the grounding grid but instead both connected to the support structure which in turn shall be connected to the grounding grid at least at two diagonally opposite points. See "Figure 10-3, detail 9".

11.12 Terminal Transmission Tower Grounding

Terminal transmission towers located adjacent to the substation shall be connected to the substation grounding grid at two diagonally opposite points. The shield wire shall be connected to the tower structure, which in turn is connected to the grounding grid as discussed above.

11.13 Lightning Masts

Metal lightning masts shall have one safety ground.

11.14 Re-closers

The tank of re-closer(s) shall be safety grounded at one location. The respective control cabinets shall also be connected to the grounding grid.

11.15 Ring Main Unit (RMU)

The RMU inside the substation, if applicable, shall have two safety ground connections.

11.16 Oil Tanks and Oil / Water Piping

All oil tanks shall be grounded at two points with bolted cable connections to two different points of the grounding grid. Oil piping shall be grounded at intervals of "12 meter". Runs shorter than "l2 meter" shall be grounded at least at two points. Water piping shall be connected to the grounding system at all service points. In addition, two copper conductors of adequate size, as specified in Table 10-3, shall be connected to the main water pipe from two separate points of the grounding grid.

11.17 Metal Clad Switchgear

Metal Clad switchgear shall have two safety grounds connected to the switchgear grounding bus. Withdrawable circuit breakers and PTs shall be provided with reliable connection to the ground bus. Grounding via the roller wheels and the rail is not acceptable.

11.18 Grounding of Lighting Equipment

11.18.1 Grounding of the lighting fixtures, lamp holders, lamps, receptacles and metal poles supporting lighting fixtures shall be per Article 250 and 410 of NEC (NFPA 70).

11.18.2 Portable Equipment

Portable electrical equipment shall be grounded in accordance with the applicable requirements of Articles 250 of the NEC (NFPA 70).

11.19 Temporary Grounding

All the components used for temporary protective system shall be sized as per Eq. 10-13. All other requirements of temporary grounding shall meet IEEE Std. 1246, "Guide for Temporary Protective Grounding System Used in Substations".

11.20 Instruments, Relays and Meters

Instruments, meters and relays shall be grounded in accordance with the requirements of the NFPA 70 (National Electrical Code) Articles 250-120 to 126 and Articles 250 -170 to 178.

12.0 EQUIPMENT REQUIRING BOTH SAFETY AND SYSTEM GROUNDS

All operating grounds shall have their connections made to the grounding rods, which in turn shall be connected to the grounding grid.

12.1 Power Transformers

12.1.1 Power transformer tanks shall be safety grounded at two points diagonally opposite to each other. These connections shall be made from two different points of the grounding grid.

12.1.2 Neutral of Power transformer shall be grounded as per transformer Specification 53-TMSS-01, Rev-02. Neutral grounding shall be connected to the grounding grid directly.

12.1.3 Independently mounted radiator bank and LPOF / XLPE cable termination boxes shall be separately grounded at two diagonally opposite locations.

12.1.4 Unloaded tertiary shall be corner grounded as per IEC 60076-3 and loaded tertiary grounding shall be through grounding transformer. Also refer 53-TMSS-01, Rev-02.

12.1.5 Power transformers, if it is specified for neutral grounding through resistor, the transformer neutral shall be connected through insulated cable to Resistor's terminal bushing while the other end of the resistor is connected to grounding grid.

12.2 Instrument Transformers

12.2.1 Potential and current transformers shall have their metal cases grounded.

12.2.2 The grounding terminal of the potential transformers shall be connected to the grounding grid. The neutral point of the secondary connections of potential and current transformers shall be grounded to the ground grid in the control/relay room instead of switchyard to reduce the transient over-voltages. Other requirements of instruments transformer grounding shall be per IEEE C57.13.3, "Guide for Grounding of Instrument Transformer Secondary Circuits and Cases".

12.3 Surge Arresters

12.3.1 Where surge counter and / leakage current indicating meters are installed, a "5kV insulated cable" shall be used between arrester ground terminal and

surge counter. The surge monitor's ground terminal shall be connected to the ground grid via “two (2) 240 mm² stranded copper conductors”.

12.3.2 The system ground conductor shall be as short as possible, free of sharp bends and shall not be installed in metallic conduit. In addition, ground rods shall be driven adjacent to the arrester connection to the grounding grid to provide the lowest ground grid resistance at this point.

12.4 Station Auxiliary Transformer

Station auxiliary transformer shall be safety grounded at two locations diagonally opposite. One system ground shall be directly connected to the neutral bushing of wye connected windings that are to be solidly grounded.

12.5 Shunt Capacitors

Shunt capacitors are considered safety grounded when mounted on a metal structure that is connected to the grounding grid at two diagonally opposite legs of the rack. Grounding pad be suitable to connect stranded bare conductor of size up to “2x240mm^2”.

Capacitor bank neutral(s) shall be grounded according to IEEE C37.99, where neutral grounding is required.

12.6 Coupling Capacitor Voltage Transformers (CCVTs)

The grounding terminal and neutral point of secondary connections of CCVTs shall be connected to the grounding grid similar to potential transformer as described under clause 12.2.2.

12.7 Oil Immersed Reactor

Reactor tanks shall be safety grounded at two points diagonally opposite to each other. These connections shall be made from two different points of the grounding grid. A separate system ground shall be provided for the neutral of the reactor. The neutral grounding conductor shall be insulated from the reactor tank by support insulators mounted on the tank wall and shall be connected to the grounding grid directly or through neutral grounding reactor as required for the project. Independently mounted radiator bank and LPOF / XLPE cable termination boxes shall be separately grounded at two diagonally opposite locations by copper strips.

12.8 Air Core series Reactor

Reactor pedestal shall be safety grounded at two points diagonally opposite to each other. These connections shall be made from two different points of the grounding grid.

12.9 Neutral Grounding Resistor

Enclosure of NER shall be safety grounded at two points diagonally opposite to each other by "copper conductor of size 240mm^2". Also refer 57-TMSS-01.

12.10 Neutral Grounding Transformer

12.10.1 Neutral Grounding transformer tanks shall be safety grounded at two points diagonally opposite to each other.

12.10.2 Neutral Grounding transformer neutral shall be grounded as per Specification 52-TMSS-01.

12.11 Air Core Neutral Grounding Reactor

12.11.1 Air Core Neutral Grounding Reactor metal structure shall be safely grounded at two diagonally opposite to each other.

12.11.2 Grounding of terminal shall be as per Specification 52-TMSS-02.

12.12 SVC & STATCOM

Grounding system shall be with grounding conductors, ground rods and other associated accessories complete in accordance with this Engineering Standard.

The SVC grounding system shall under all circumstances not form bonded loops and shall be based on a radial system interconnected with the grounding grid at the substation. Earth connections to the Grounding Grid shall be as per equipment manufacturer's recommendations.

The grounding system at the Substations shall be suitably interconnected with the proposed grounding grid of the SVC Stations. However for the new SVC Bay grounding, special care should be taken to provide the new grounding system which will not form closed loops, to ensure that no induced current from the TCR's are circulated in the grounding loops. Also care shall be taken, such that adequate clearance shall be maintained from the Air Core Reactors and the SVC local fence to prevent any induced current circulation in the fence closed loops. The CONTRACTOR shall propose detailed grounding plan with calculations for COMPANY review.

The earthing system for the SVC shall fulfill SEC/NG requirements for a standalone system, though the earthing system shall be interconnected with the grounding system in the existing/ongoing substation.

In case the CONTRACTOR has to place any equipment on the existing/ongoing substation site, it shall be connected to the existing earthing grid. No new earthing calculations/measurements needs to be done; only grid continuity shall be checked.

12.13 HVDC

Grounding of HVDC equipment to the Grounding Grid shall be performed as per the recommendation of equipment manufacturer.

Table 10-3 : Application List of Conductor Sizes for Equipment Safety Grounding

Sr. No.	Description	Conductor Size (mm²)		Comments
		Station Fault Level		
		40kA and Below	Above 40 kA	
1.	Steel Structures	240	2 x 240	At two (2) locations diagonally opposite
2.	Power Transformers Tank / Reactor Tank	240	2 x 240	At two (2) locations diagonally opposite
3.	Air core series Reactor	240	2 x 240	At two (2) locations diagonally opposite
4.	Neutral Grounding Resistor	240	-----	At two (2) locations diagonally opposite
5.	Circuit Breakers and disconnect switches	240	2 x 240	At two (2) locations diagonally opposite
6.	Operating handles for outdoor disconnect switches	240	2 x 240	---
7.	Surge arresters	240	2 x 240	Refer clause 12.3
8.	Coupling capacitor and Voltage transformers	240	2 x 240	---
9.	Power Cables (13.8kV and above)	240	2 x 240	Single core cable at one end and three core cable at two end unless otherwise specified
10.	Station Service Transformer Tank	240	2 x 240	At two (2) locations diagonally opposite Neutral bushing of wye connected transformer shall be solidly grounded with one system grounding.
11.	Instrument Transformers	240	2 x 240	---
12.	Shunt Capacitors	240	2 x 240	Capacitor bank neutral(s) shall be grounded according to IEEE C37.99 where neutral grounding is required
13.	AC-DC Main / Sub Distribution Panels	240	2 x 240	---
14.	Metal clad switchgear	240	2 x 240	At two (2) locations one at each end
15.	Control Cables	95		At both ends

Sr. No.	Description	Conductor Size (mm²) Station Fault Level		Comments
		40kA and Below	Above 40 kA	
16.	Instrument Cables / Signal Cables	50		---
17.	Lightning Masts	120		---
18.	Control and Relay Panels, SAS Panels, Operating mechanism housing and Local Control Panels	95		---
19.	Metal Fence / Gate	50		---
20.	Cable Tray System / Metallic Conduits	50		---
21.	Oil Tanks / Pipes, etc.	50		---
22.	Metal Buildings	120		---
23.	Marshalling Kiosk	120		---
24.	Power Transformer Neutral	---		As per clause 12.1.2 & 12.1.5
25.	Oil Immersed Reactor Neutral			As per clause 12.7
26.	Terminal Transmission Tower	---		At two (2) locations diagonally opposite as per clause 11.12 & TES-P-122.10
27.	Re-closer	240		one
28.	Ring Main Unit	240		At two (2) locations diagonally opposite
29.	Neutral Grounding Transformer	240	2 x 240	Tank at two (2) locations diagonally opposite. Neutral shall be solidly as per 52-TMSS-01
30.	Air core Neutral Grounding Reactor	240	2 x 240	Support at two (2) locations diagonally opposite. Neutral shall be solidly as per 52-TMSS-02

13.0 CRITICAL SAFETY DESIGN PARAMETERS FOR GIS SUBSTATIONS

GIS enclosures carry induced currents of significant magnitude and shall be confined to separate paths. Switching operation and faults generate very high frequency transients that can couple on to the grounding system.

13.1 Grounding of Enclosures

To limit the undesirable effects caused by circulating currents, the following requirements shall be met.

13.1.1 All metallic enclosures shall normally be at ground voltage level.

13.1.2 No significant voltage differences shall exist between individual enclosure sections.

13.1.3 The supporting structures and any part of the grounding system shall not be adversely influenced by the flow of induced currents.

13.1.4 Precautions shall be taken to prevent excessive currents being induced into adjacent frames and structures.

13.1.5 The circulating current in the enclosure under fault conditions shall be within the maximum tolerable limit specified by the GIS manufacturer.

13.1.6 The metal-to-metal touch potential for the GIS enclosure shall be determined and the same shall be less than the permissible limit.

13.1.7 As GIS substations have limited space, reinforced-concrete foundation may cause irregularities in the current path. The use of simple monolithic slab reinforced by steel serves as an auxiliary grounding devices. The reinforcing bars in the foundations shall be connected to the grounding grid to act as additional ground electrodes. However care shall be taken to ensure that no discharge current shall flow through the reinforcing bars, which may cause a gradual deterioration of the concrete steel bonds.

To avoid damage to reinforced concrete foundation the current density in the steel conductor of the concrete foundation under fault conditions shall be determined and shall be less than the value of short time current loading capability I_{CE} of the concrete encased electrode. I_{CE} can be estimated per clause 14.6 of IEEE 80 or directly from Figure 10-4.

13.2 Voltages for GIS Substations

The enclosures of GIS substations shall be properly designed and adequately grounded so as to limit the potential difference to permissible touch voltage.

Dangerous touch and step voltages within the GIS area are drastically reduced by complete bonding and grounding of the GIS enclosures and by using grounded conductive platforms connected to the GIS structures.

For other safety measures to limit the undesirable effects caused by circulating currents and Transient Grid Potential Rise (TGPR), refer to IEEE Std.80.

14.0 FIELD MEASUREMENT OF A CONSTRUCTED GROUNDING SYSTEM

The following measurements shall be carried out for the constructed grounding system to check the design.

14.1 Grounding Impedance

Only approximate results can be expected from a pre-calculation and site measurement of substation ground grid impedance. For substation located in uniform soil, the measurement of ground grid impedance shall be carried out after installation by utilizing pig tails (for equipment grounding) or at minimum two grounding test pits. Various methods exist for measurement of ground resistance. Out of these, fall of potential method, which is applicable for all types of ground impedance measurements shall be used for ground resistance measurements for grid laid in uniform soil. For further details, refer IEEE 81 standard. For non-uniform soils, the values derived from computer algorithm can be considered as reliable.

14.2 Step and Touch Voltages

Actual field measurements of GPR, step and touch voltages and transfer potential shall be carried out for all new substation grounding grid. The basic method for such gradient measurements involves passing a test current in the order of about “10 - 100A” via. a remote current electrode and measuring the resulting GPR, touch and step voltages and transfer potentials generally as per the method prescribed in Std. IEEE 80 and IEEE 81.

14.3 The Earth Mat design shall be evaluated for the following critical conditions:

14.3.1 Touch and Step potentials in mat area in case of Internal fault in enclosure of GIS / GIL.

14.3.2 Touch and Step potentials in mat area in case of close external fault.

14.3.3 Touch and Step potential in GIS area (where there is no gravel) in case of fault in GIS enclosure.

14.3.4 Touch and Step potential in GIS area (where there is no gravel) in case of close external fault.

14.3.5 The step potential up to a distance of “1m” from edge of grid shall be determined to check for human and animal safety.

14.3.6 Touch voltage shall be determined for at least “1m” from edge of grid and shall be in safe limits.

15.0 CORROSION CONTROL

15.1 Corrosion Protection

Galvanic corrosion occurs when two metals of different potentials come into direct contact with one another while immersed in an electrolyte. The two metal's difference in potential causes current to flow from the cathode to the anode, which, leads to oxidation of the anode and reduction of the cathode.

Since a grid of copper conductor forms a galvanic cell with the buried steel structures, piping, etc., precautions to prevent corrosion shall be taken wherever soil resistivity is less than "70 ohm-meter". Precautions shall include, but not limited to, the following:

15.1.1 Insulation of sacrificial metal surfaces with a coating such as plastic tape, asphalt compound or both, per IEEE-80.

15.1.2 Where possible, route grounding conductors at least "6 meters" away from buried steelworks.

15.1.3 Routing of buried metal elements so that any copper-based conductor will cross gas pipes or similar objects made of other metals as nearly as possible at right angles, and then applying insulating coatings to one metal or the other where they are in close proximity.

15.1.4 A full cathodic protection of sacrificial metals in the area or where feasible, use of non-metallic pipes and conduits.

15.1.5 In GIS substations, cathodic protection may also be required for protecting the facilities that are external to the GIS substation, such as LPOF cables or lead-shielded cables, etc.

15.1.6 Corrosion problems can also be caused by stray DC currents. The source of these stray DC currents may be welding equipment, battery charging apparatus, motors, generators, DC control circuits, or nearby impressed current cathodic protection systems.

15.1.7 The subject of underground corrosion and cathodic protection is complex. When severe corrosion problems exist, either from galvanic or stray currents, a corrosion engineer shall be engaged to investigate the situation.

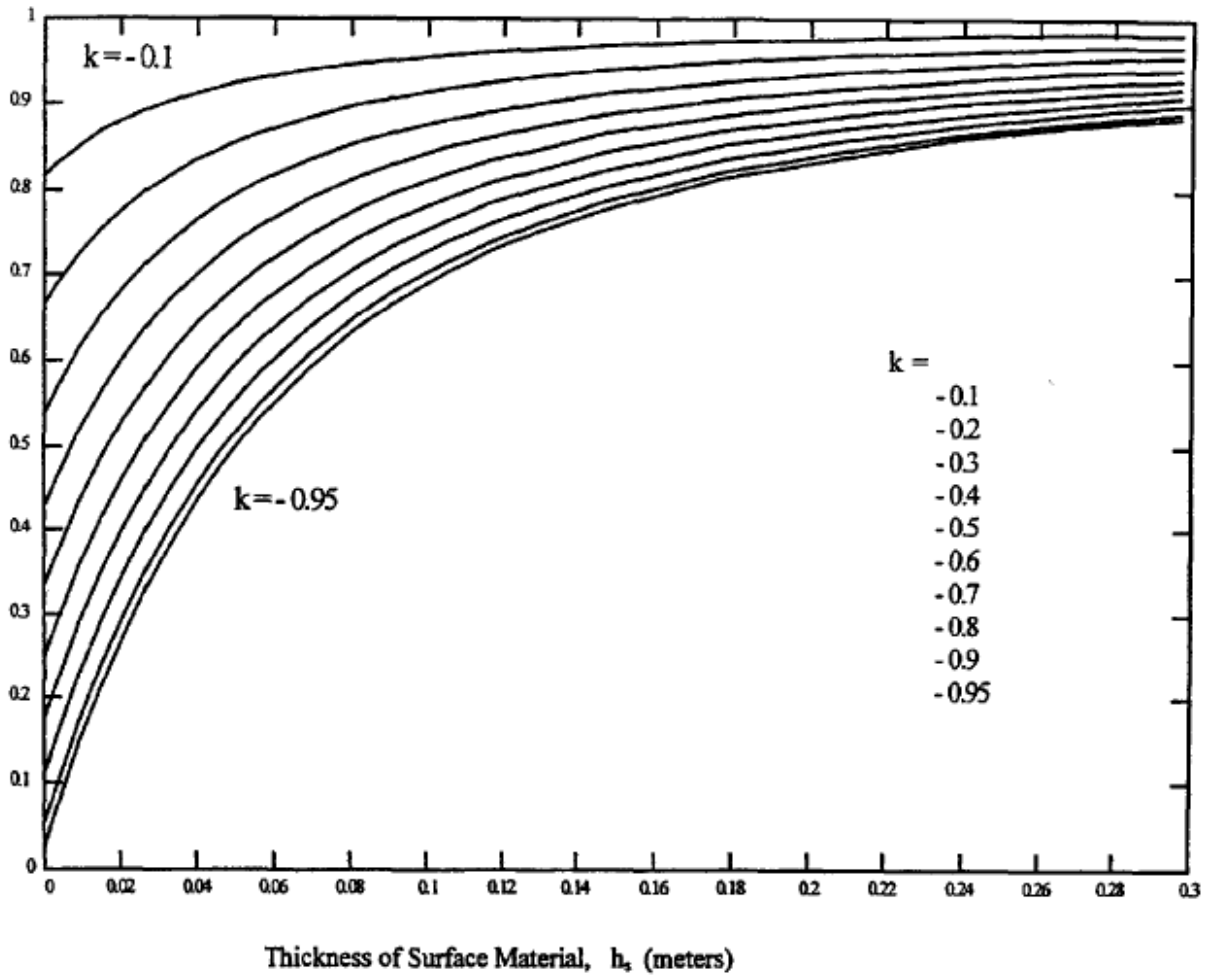

Figure 10-1

Surface Layer Derating Factor (C_s)
Versus
Thickness of Surface Material (h_s)

DRAWING NUMBER TE-1910-0100-00

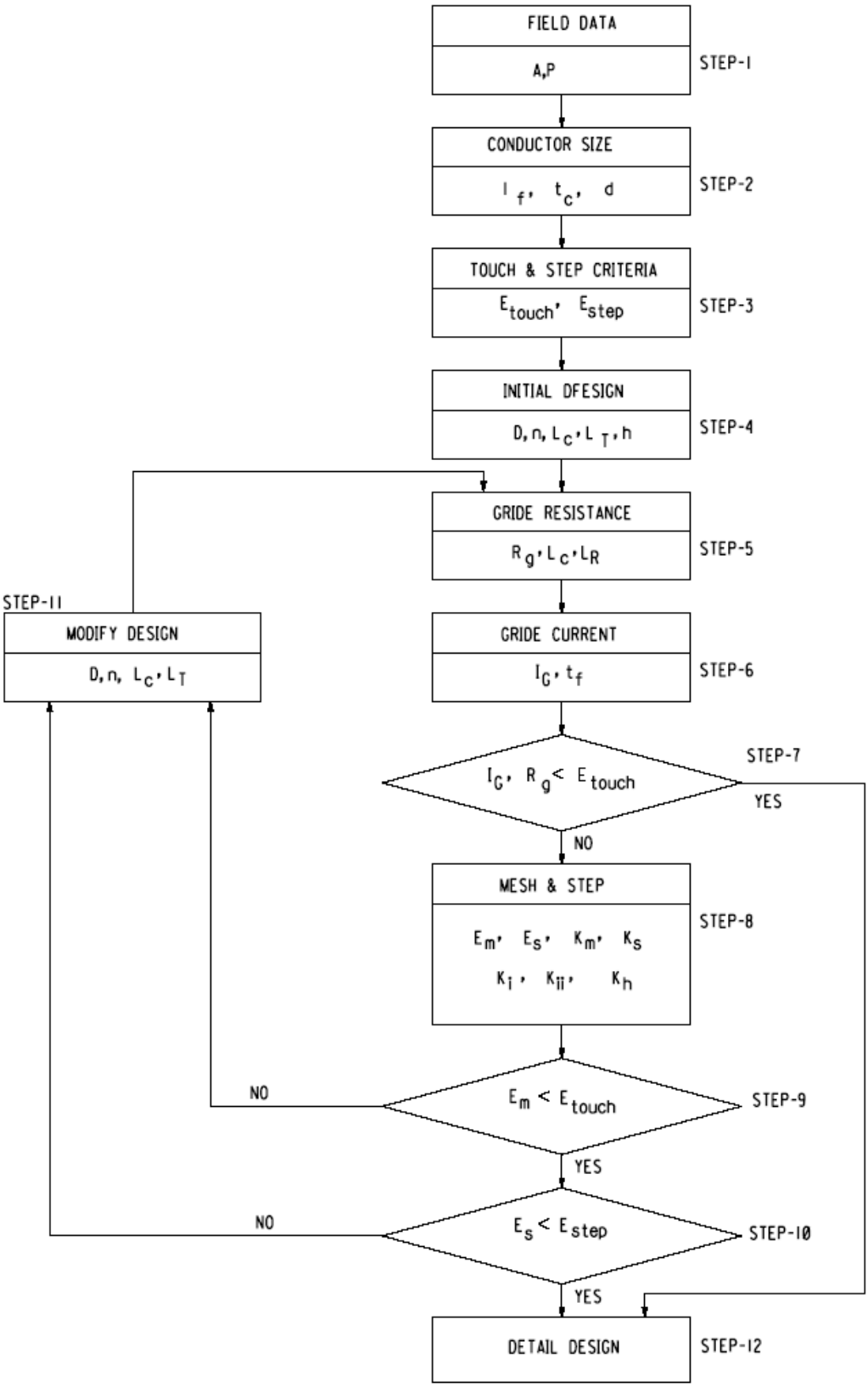

FIGURE 10-2 DESIGN PROCEDURE BLOCK DIAGRAM

DRAWING NUMBER TE-1910-0200-00

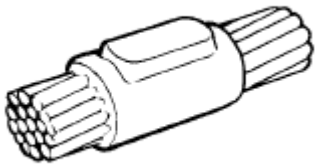

CABLE TO CABLE STRAIGHT SPLICE

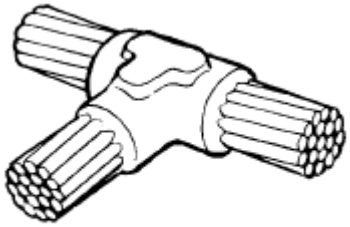

CABLE TO CABLE TEE CONNECTION

DETAL-1 CABLE-CABLE STAIGHT & T CONNECTION

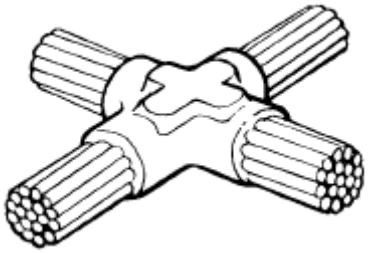

ALTERNAT-1

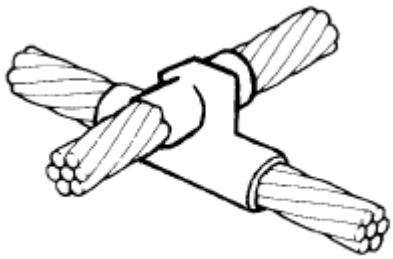

ALTERNAT-2
DETAL-2 CABLE-CABLE CROSS CONNECTION

(**THERMIT WELD CONNECTIONS**)

FIGURE 10-3: GROUNDING INSTALLATION DETAILS Sheet 1 of 5

DRAWING NUMBER TE-1910-0301-00

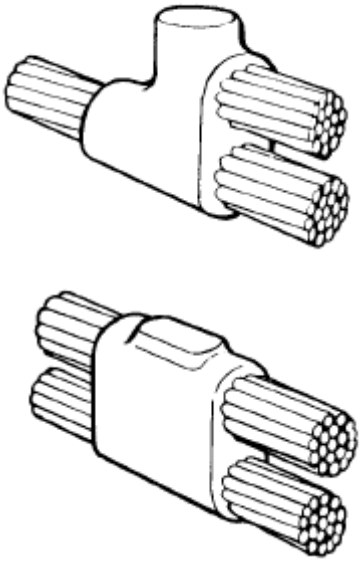

DETAIL-3 CABLE TO CABLE PARALLEL CONNECTION

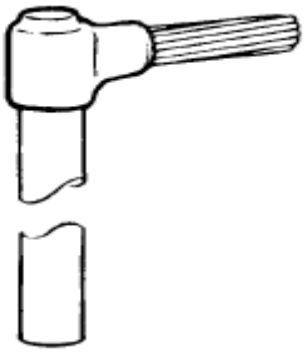

(ALTERNATE-1)

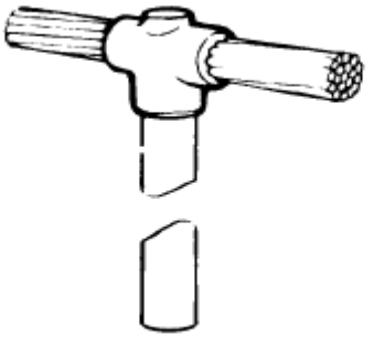

(ALTERNATE-2)

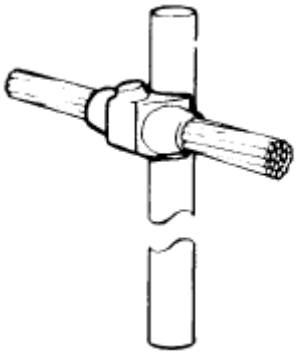

(ALTERNATE-3)

DETAIL-4 CABLE TO GROUND ROD CONNECTION

(THERMIT WELD CONNECTIONS)

FIGURE 10-3: GROUNDING INSTALLATION DETAILS Sheet 2 of 5

DRAWING NUMBER TE-1910-0302-00

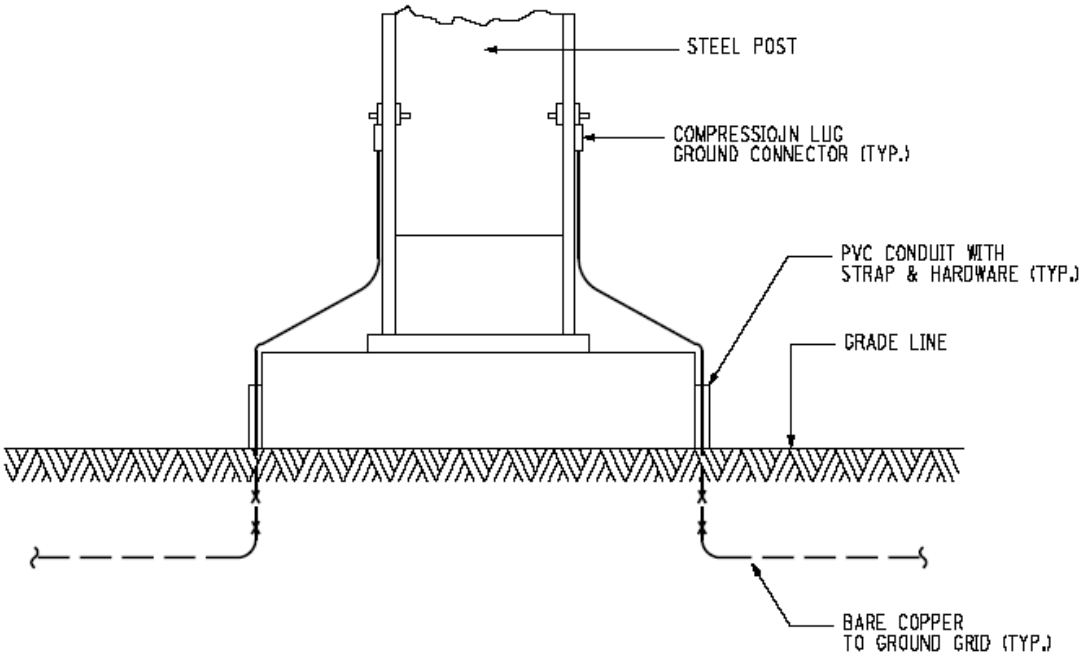

DETAIL - 5 TYPICAL SUPPORT STRUCTURE GROUNDING

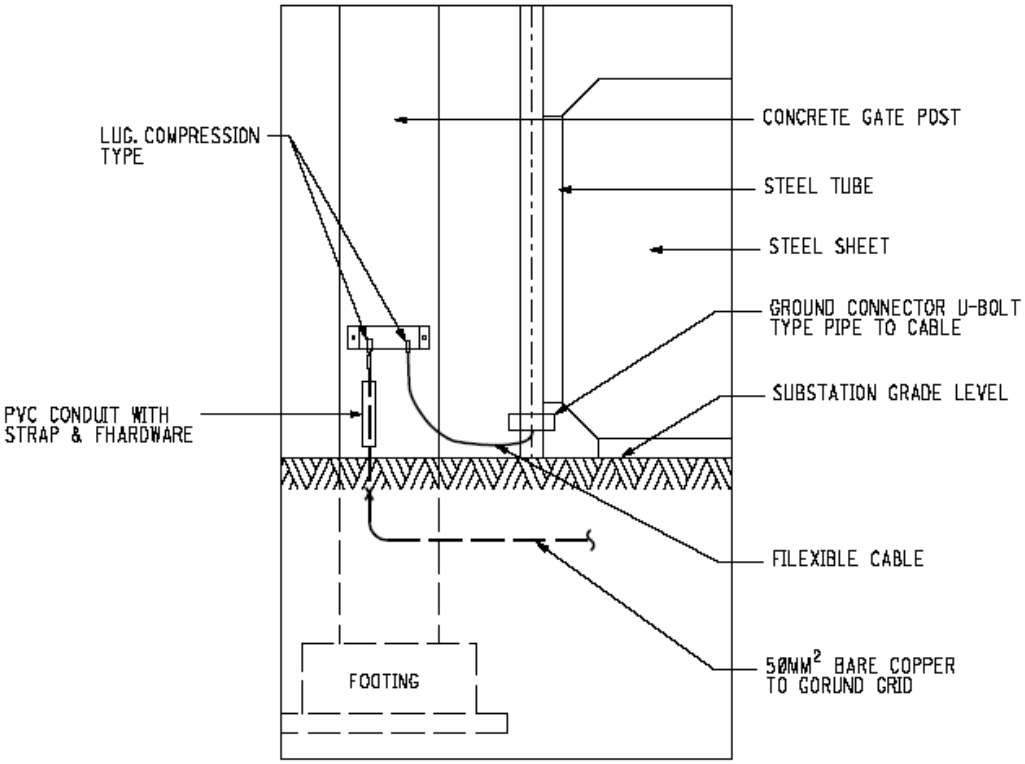

DEATIL - 6 TYPICAL GATE GROUNDING

FIGURE 10-3: GROUNDING INSTALLATION DETAILS SHEET 3 OF 5

DRAWING NUMBER TE-1910-0303-00

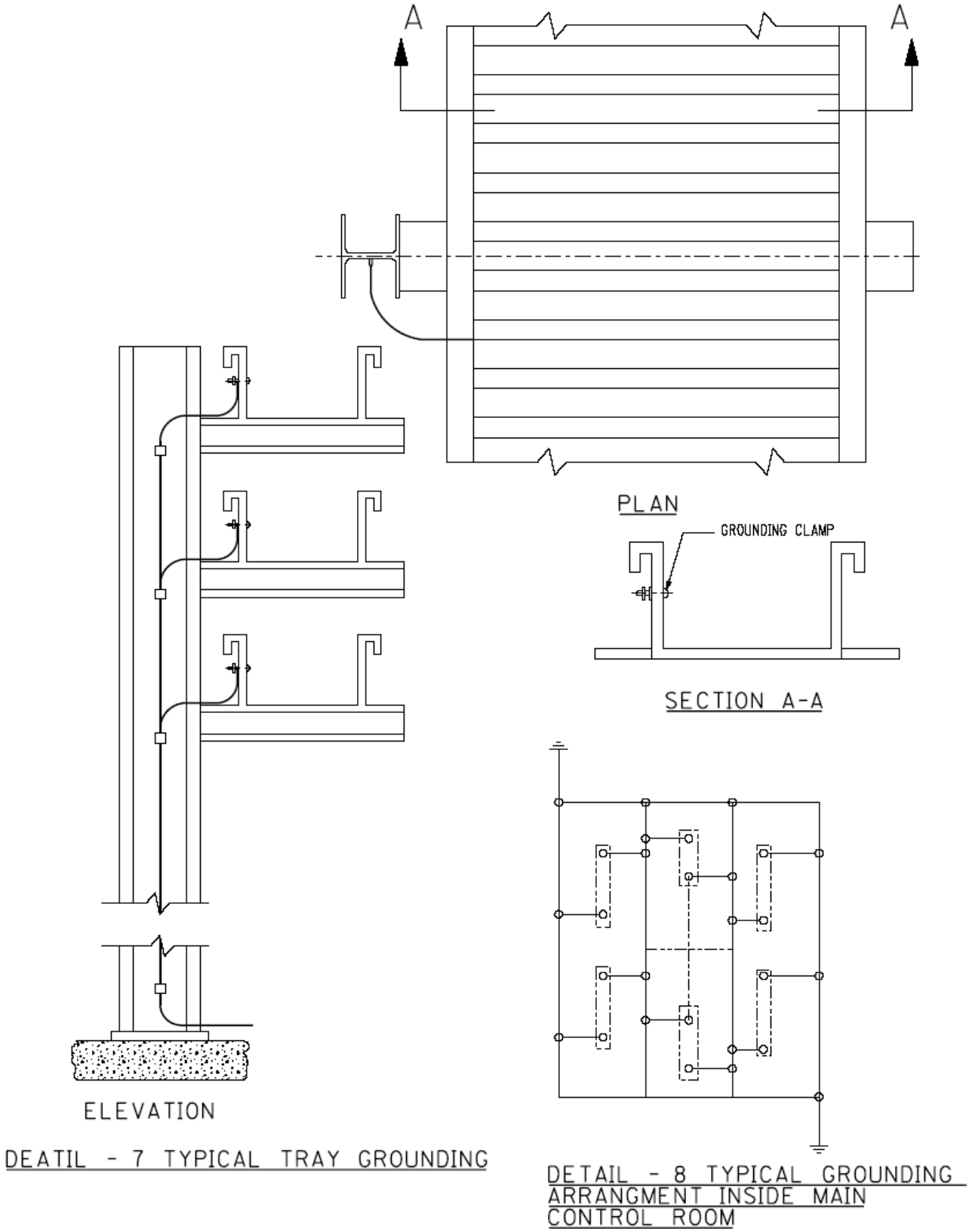

FIGURE 10-3 GROUNDING INSTALLATION DETAILS SHEET 4 OF 5

DRAWING NUMBER TE-1910-0304-00

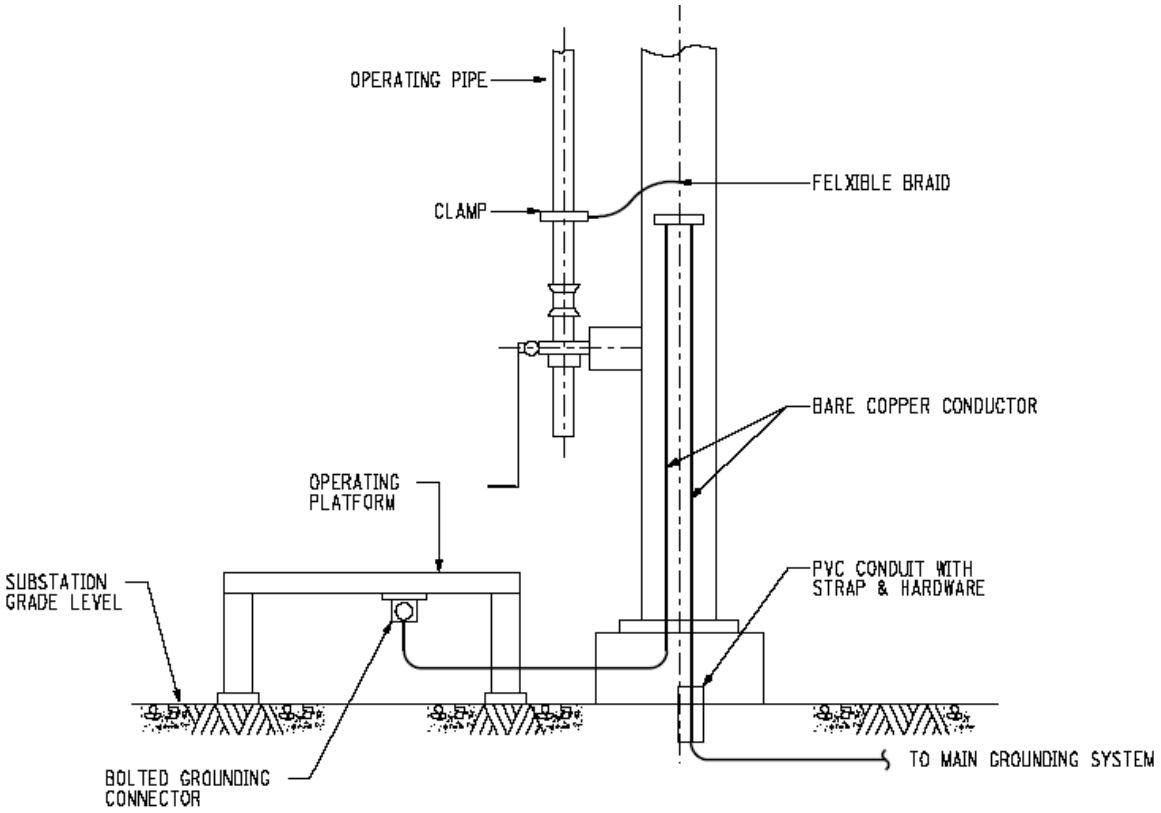

DEATIL - 9 TYPICAL GROUNDING OF OPERATING PLATFORM FOR DISCONNECT SWWITCH

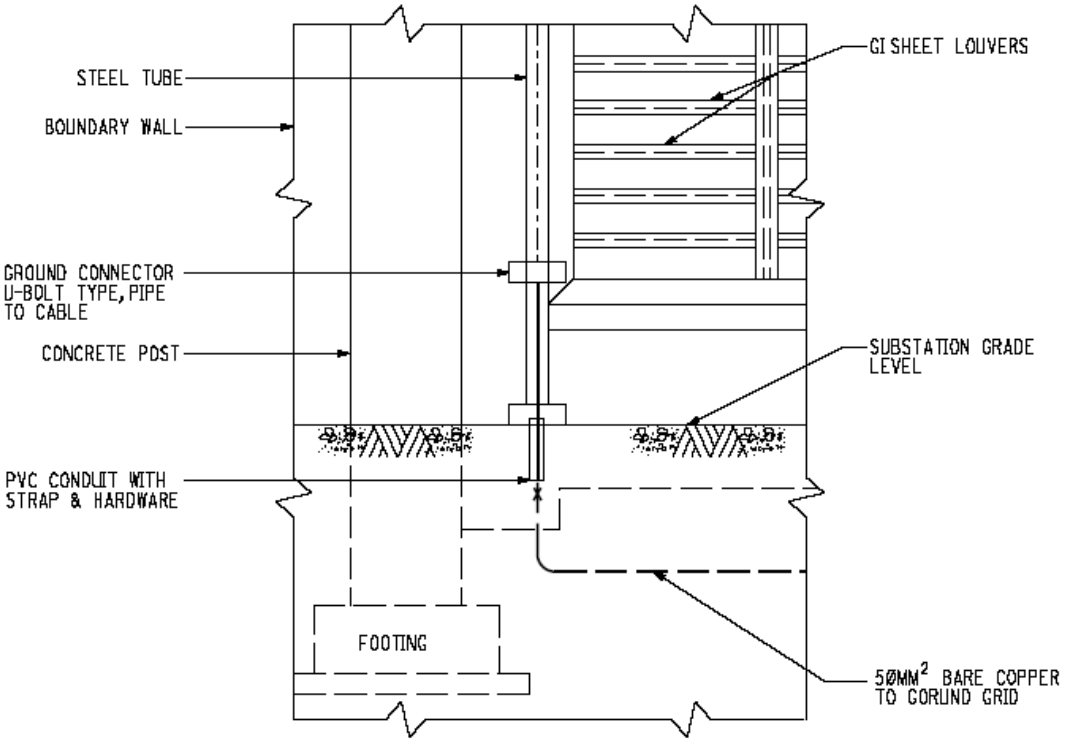

DETAIL - 10 REMOVABLE GROUNDING

FIGURE 10-3: GROUNDING INSTALLATION DETAILS SHEET 5 OF 5

DRAWING NUMBER TE-1910-0305-00

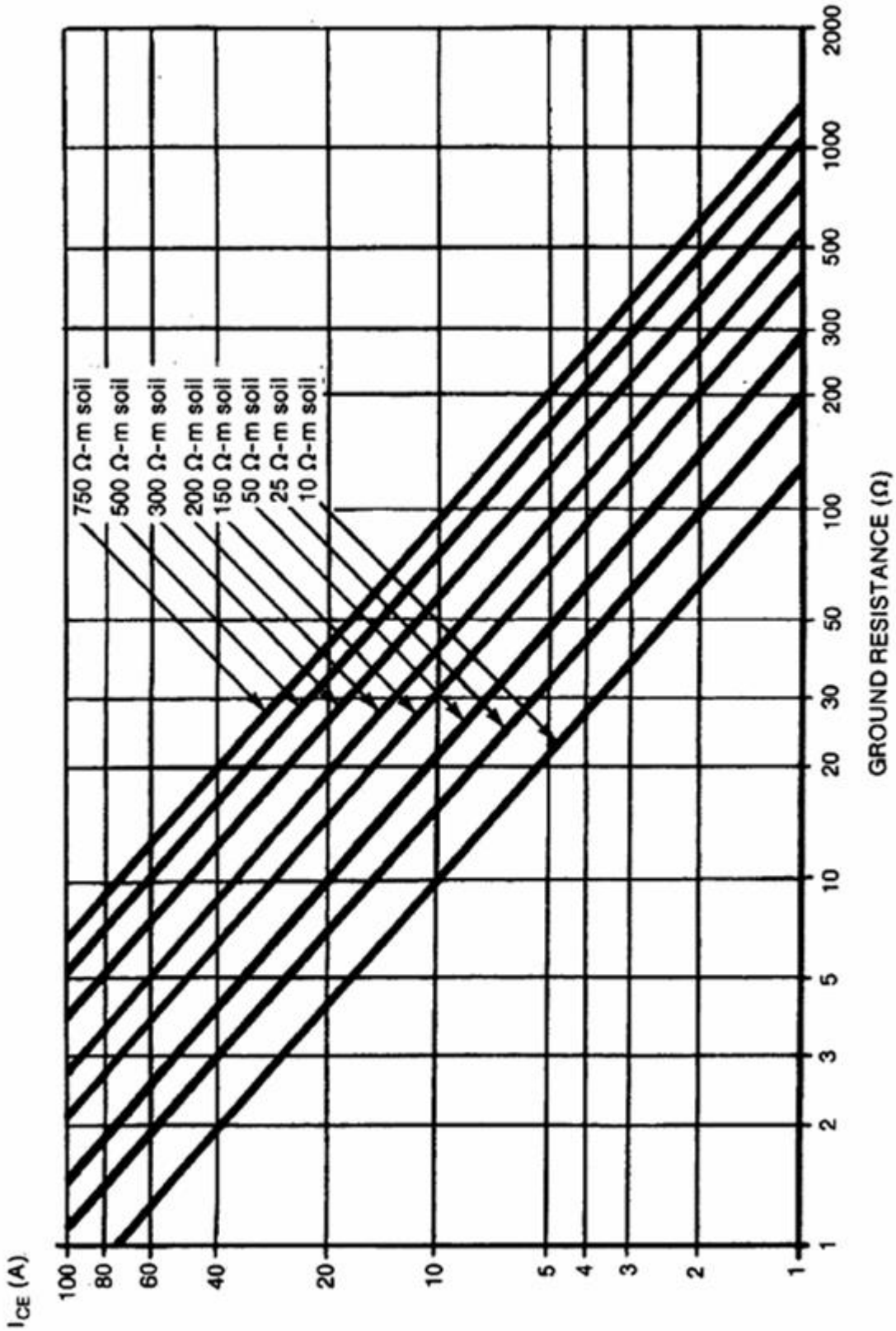

FIGURE 10-4

Short time Current Loading Capability I_{CE} of Concrete Encased Ground Electrode

DRAWING NUMBER TE-1910-0400-00

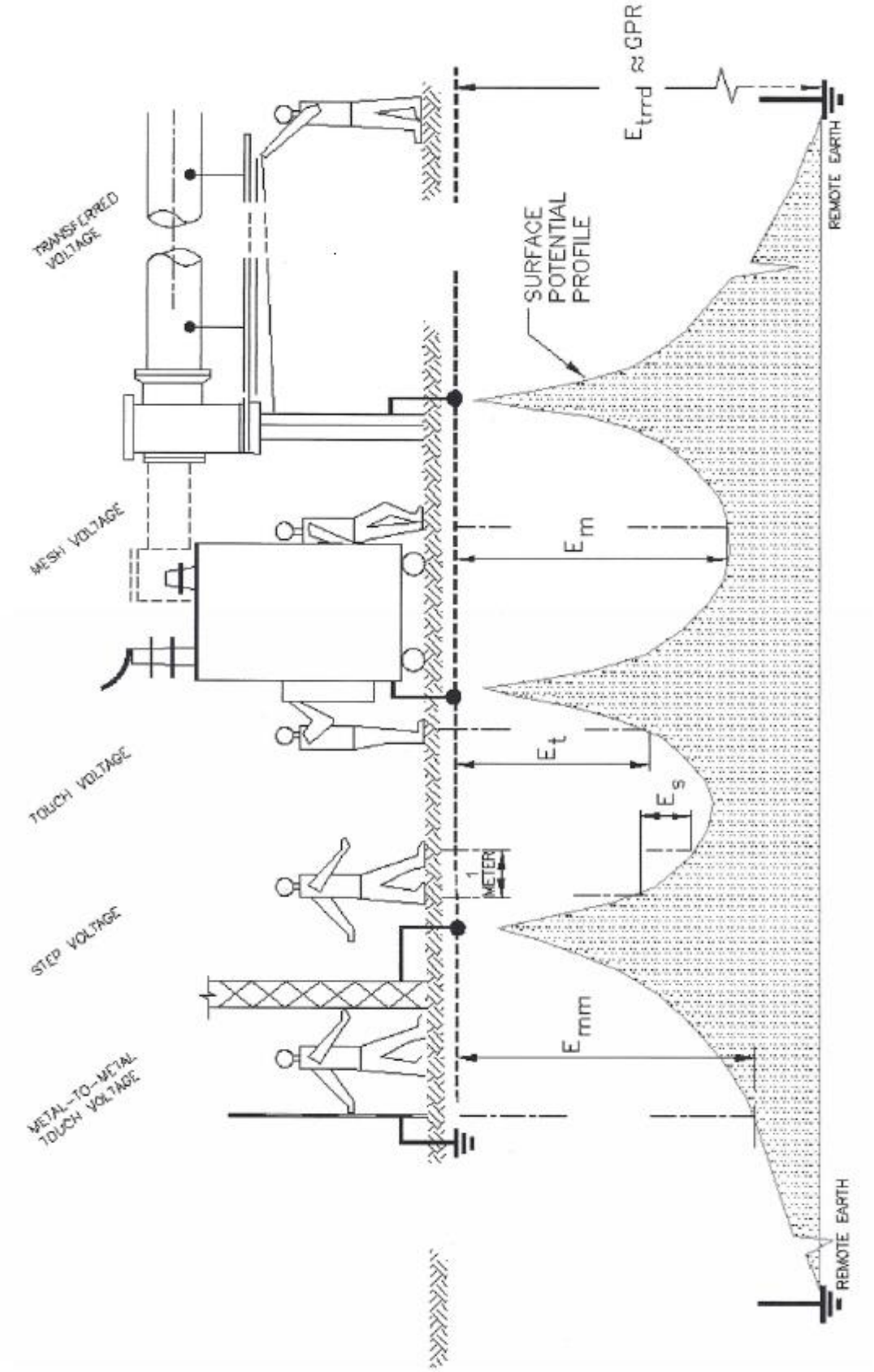

FIGURE 10-5
BASIC SHOCK SITUATIONS

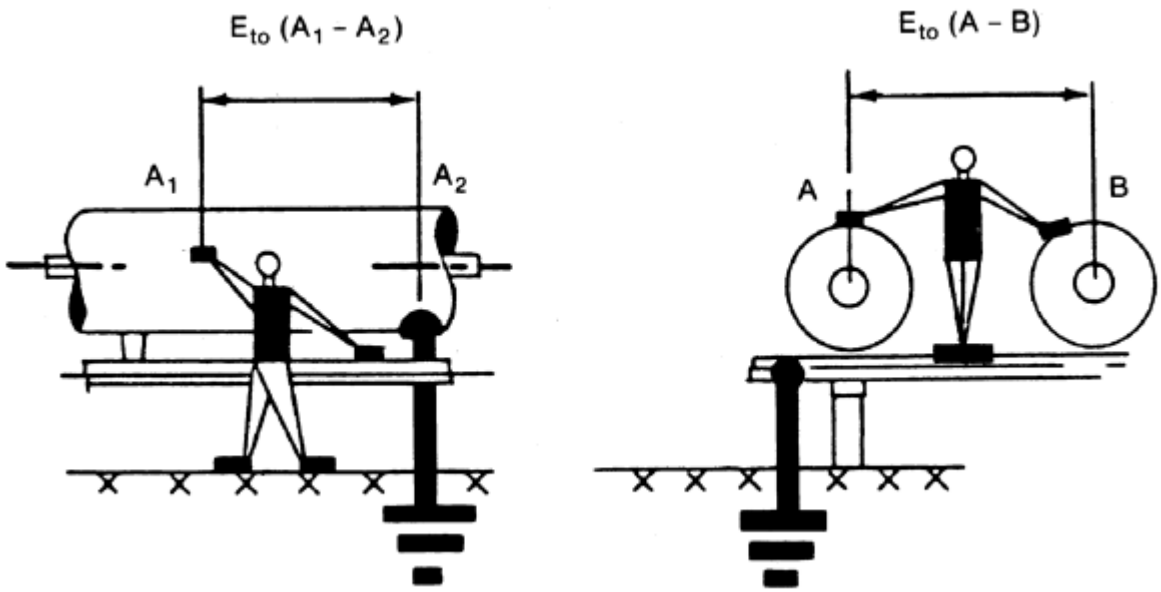

FIGURE 10-6
TYPICAL METAL-TO-METAL TOUCH SITUATION IN GIS

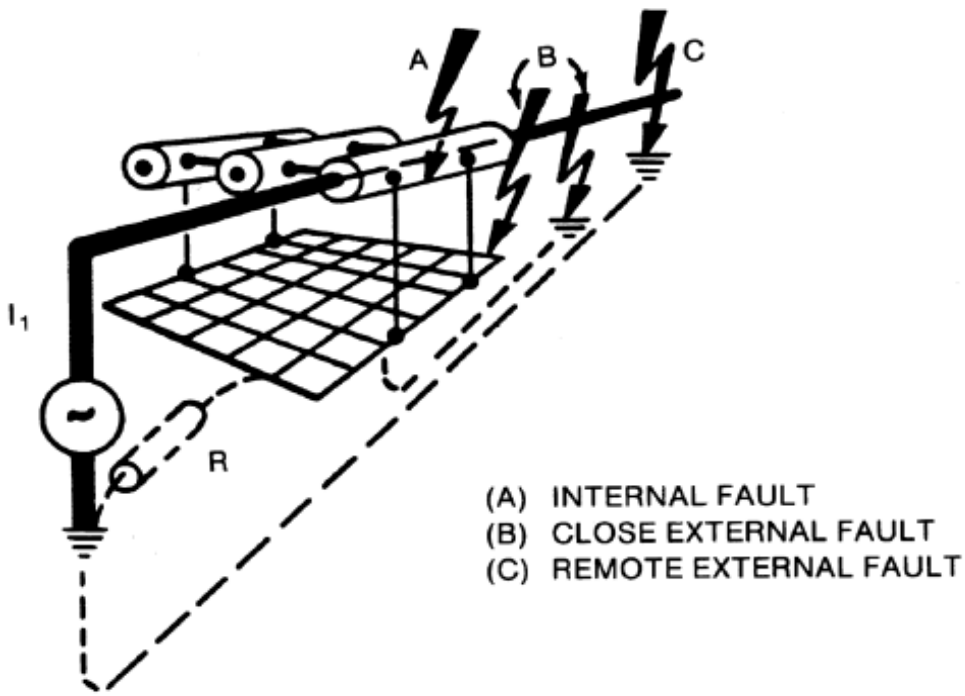

FIGURE 10-7
TYPICAL FAULTS IN GIS

16.0 BIBLIOGRAPHY

1. NFPA 70, "National Electrical Code".
2. ANSI/IEEE Std.80, "IEEE Guide for Safety in Substation Grounding".
3. ANSI/IEEE Std.81, "IEEE Recommended Guide for Measuring Earth Resistivity, Ground Impedance and Earth Surface Potentials of a Ground System".
4. ASTM G 57, Rev.A “Standard Test Method for Field Measurement of Soil Resistivity Using the Wenner Four Electrode Method”.
5. IEEE Std. 837, “Qualifying Permanent Connections used in Substation Grounding”
6. IEEE Std. 1246, “Temporary Protective Grounding System used in Substations”.
7. IEEE C 57.13.3, “Guide for Grounding of Instrument Transformers Secondary Circuits and Cases”.
8. IEC TS 60479-I, “Effects of Current on Human Beings and Livestock.
9. Donald G. Fink and H. Wayne Beaty, "Standard Handbook for Electrical Engineers", Thirteenth Edition, Mc Graw-Hill, Inc. N.Y., 2000.
10. M. Khalifa, "High Voltage Engineering, Theory and Practice", Fourth Edition, John Wiley and Sons, Inc., 1983.
11. Technical Reference Manual on Grounding, Electromagnetic Fields and Interference Analysis, SES, Canada.

APPENDIX

SAMPLE DESIGN CALCULATIONS

The following typical example illustrates the application of equations, tables and graphs discussed in this standard. For design procedure, please refer to the block diagram of Figure 10-2.

Step –1 Field Data

Available grounding area (A)	=	(100m x 40m) + (40m x 40m)
	=	5600 m^2 (L- shaped area)
Depth of grid burial (h)	=	0.5 m
Thickness of asphalt surface layer(h_S)	=	0.10m (4 in)
Asphalt Resistivity (ρ_S)	=	3000 ohm-meter
Soil resistivity (ρ)	=	40 ohm-meter
Current division factor (S_f)	=	0.7
Time of current flow (t_c)	=	1 second
Duration of shock (t_s)	=	0.5 second.
Breaker Interrupting Current	=	25kA

Step 2: Conductor Size

The grounding conductor shall be soft drawn, stranded copper. The required cross sectional area in "mm^2" will be based on the recommended values given in Table 10-2. As per Table 10-2 for 25kA, the cross section required is "120 mm^2".
Cross section can also be calculated using Eq. 10-14:

$$A_{mm^2} = \frac{25}{\sqrt{\left(\frac{3.422x10^{-4}}{1x0.00393x1.7241}\right)\ln\left(\frac{234+1083}{234+50}\right)}}$$

$$=89.81\ mm^2$$

Hence select "120 mm^2 cross section" from table 10-2. Diameter (d) of conductor will be "0.01236m".

L – SHAPED SUBSTATION LAYOUT

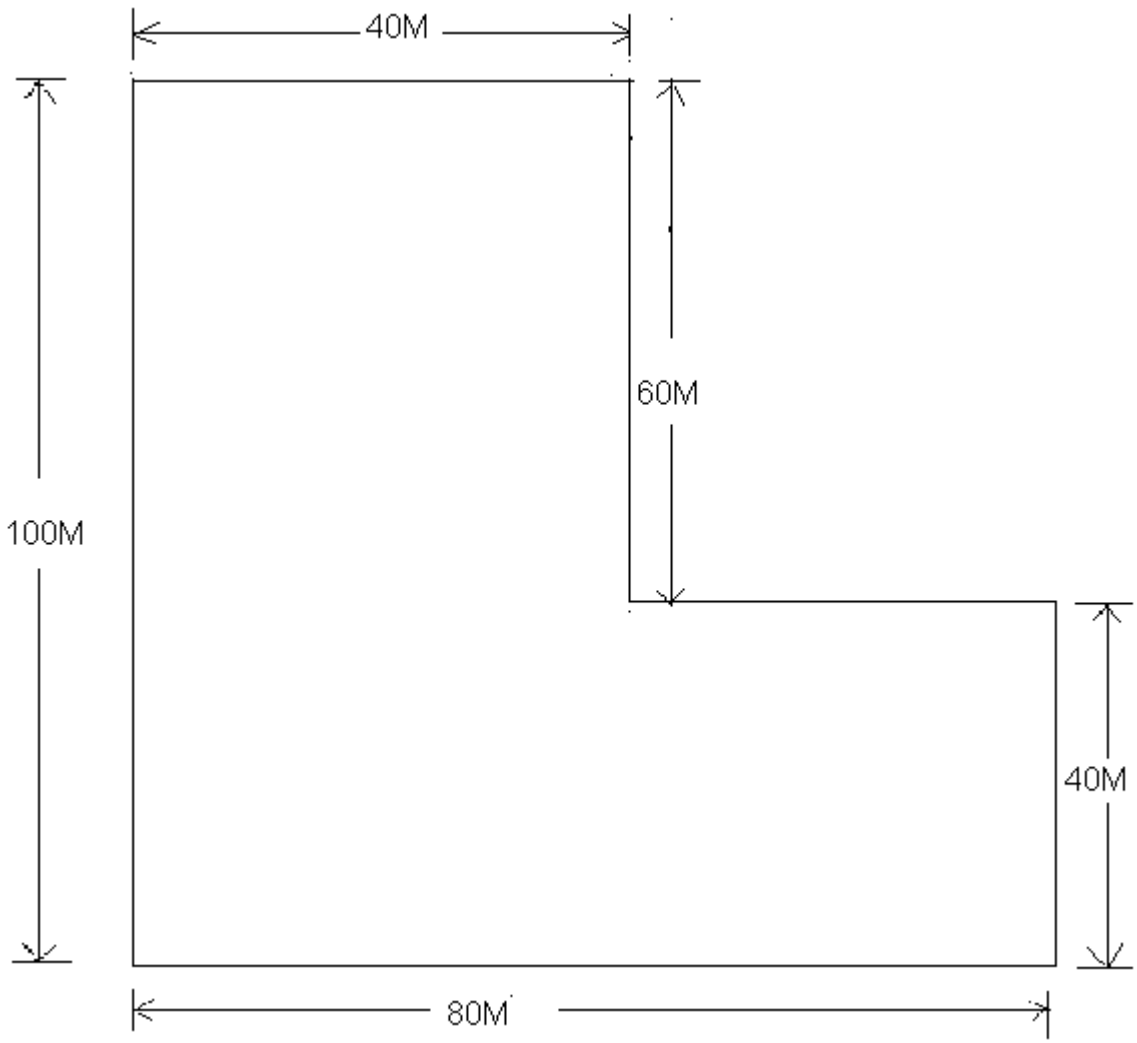

Step 3: Touch and Step Criteria

For a "0.10 meter" layer of asphalt surfacing having resistivity of "3000 ohm – meter" and for an ground with resistivity of "40 ohm – meter", the surface layer resistivity "derating factor (Cs)", using Eq. 10- 6 or will be:

$$C_s = 1 - 0.09\left[\frac{1 - 40/3000}{2 \times 0.1 + 0.09}\right] = 0.694$$

Tolerable step and touch voltages using Eq. 10-3 & 10-4 will be :

$$E_{step} = \frac{(1000 + 6 \text{ x } 0.694 \text{ x } 3000) \text{ x } 0.116}{\sqrt{0.5}} = 2213.4 \text{ V .}$$

and

$$E_{touch} = \frac{(1000 + 1.5 \text{ x } 0.694 \text{ x } 3000) \text{ x } 0.116}{\sqrt{0.5}} = 676.4 \text{ V .}$$

Step 4: Initial Design

i. Assuming a spacing (D) of "7 meters" between parallel conductors and extending the ground conductor "1.5 meters" beyond the fenced area of the substation.

ii. Assuming "80 number ground rods, 7.5 meter long",

Step 5: Determination of Grid Resistance

For determining grid resistance R_g, Eq. 10-13 applies. Substituting the values we get

$$R_g = 40 \text{ x} \left[\frac{1}{2461} + \frac{1}{\sqrt{20 \text{ x } 5600}} \text{ x} \left(1 + \frac{1}{1 + 0.5 \text{ x} \sqrt{\frac{20}{5600}}} \right) \right]$$

=0.2518 ohm

Step 6: Determination of Maximum Grid Current

Using Eq. 10- 8

I_G =0.7 x 25x1000 = 17500 A

Step 7: Ground Potential Rise
Using Eq. 10-2

GPR = I_G x Rg
= 17500x 0.2518 = 4406.5 V.

Calculated value of the GPR far exceeds the safe value of "touch voltage, i.e. 676.4 V". Hence, further design evaluations are necessary.

Step 8

Calculation of The Mesh Voltage (E_m)

In order to evaluate the mesh voltage; n, K_m and K_i values are computed per Eq.10- 10, Eq.10-9 as below.

$$n = n_a.n_b.n_c.n_d$$

$$n_a = \frac{2.\text{x } 1861}{360} = 10.339$$

$$n_b = \sqrt{\frac{360}{4.\sqrt{5600}}} = 1.097$$

$$n_c = \left[\frac{80\times100}{5600}\right]^{\frac{0.7\times5600}{80\times100}} = 1.191$$

n_d = 1 for L shaped grid

Therefore n = 10.339 x 1.097 x 1.191 x 1 = 13.51

Now K_{ii} = 1

h_0 = Reference depth of grid = 1 m

$$K_h = \sqrt{(1+\frac{h}{h_0})} = \sqrt{(1+\frac{0.5}{1.0})} = 1.225$$

Substituting above values in Eq. 10- 10, we get:

$$K_m = \frac{1}{2\pi}\left[\ln\left(\frac{7^2}{16\times0.5\times0.01236}+\frac{(7+2\,x\,0.5)^2}{8\,x\,7\,x\,0.01236}-\frac{0.5}{4\,x\,0.01236}\right)+\left(\frac{1}{1.225}\,x\,\ln\frac{8}{\pi(2\,x\,13.51-1)}\right)\right]$$

K_m = 0.71

From Eq. 10- 9, the irregularity factor K_i is found to be:

K_i = 0.644 + 0.148x 13.51 = 2.643.

Now applying Eq. 10- 9, and substituting values, we get :

$$E_m = \frac{40\,x\,0.71\,x\,2.643\,x\,17500}{1861+\left[1.55+1.22\left(\frac{7.5}{\sqrt{80^2+100^2}}\right)\right]600}$$

E_m = 463.5 V

<u>Calculation of the Maximum Step Voltage</u> (E_s)

Using Eq. 10- 12

$$K_s = \frac{1}{\pi}\left[\frac{1}{2\times0.5}+\frac{1}{7+0.5}+\frac{1}{7}\left(1-0.5^{13.51-2}\right)\right]$$

K_s = 0.406

Now substituting in Eq. 10- 11, the step voltage is:

$$E_S = \frac{40\,x\,17500\,x\,0.406\,x\,2.643}{0.75\,x\,1861+0.85\,x\,600} = 394\text{ V}$$

Step 9: Mesh Voltage Criterion

The calculated "mesh voltage (463.5V)" is lower than the "E_{touch} tolerable limit (676.4V)".

Step 10: Step Voltage Criterion:

The computed value of "step voltage (394V)" is well below the "tolerable E_{step} (2213V)".

Step 11: Modifying the Design

Not required.

Step 12 Detail Design

A safe design has been obtained. At this point, all equipment pigtails, additional ground rods for surge arresters, etc. shall be added to complete the grid design details.