الشركة السعودية للكهرباء
Saudi Electricity Company

REVISIONS					
No.	Date	DESCRIPTION	ORIG'D	CERT.	APP'D
1					
2					
3					

TES-P-119.33

Revision no. 0

SUBSTATION ELECTRICAL DIAGRAMS

PROPRIETARY INFORMATION

This document contains proprietary information developed by and for exclusive use of Saudi Electricity Company. Your acceptance of the document is an acknowledgement that it must be used for the identified purpose/application and during the period indicated. It cannot be used or copied for any other purposes nor released to others without prior written authorization of Saudi Electricity Company. Saudi Electricity Company will not be responsible for misuse and/or misapplication, and any harm resulting therefrom. Saudi Electricity Company also reserves the right to take any necessary actions to protect its interest against unauthorized use.

ORIGINATED BY	CERTIFIED BY	APPROVED BY
Engr. Mohammad H. Al-Mubarak Division Manager, Transmission Substation Specifications	**Engr. Abdullah M. Al-Garni** Department Manager, Transmission Standards & Specifications	**Engr. Saleh N. Al-Sohaibani** Vice President, Engineering & Projects

Date of Approval: December 16, 2006

TRANSMISSION ENGINEERING STANDARD

TABLE OF CONTENTS

1.0 PURPOSE AND SCOPE

2.0 ONE-LINE DIAGRAM

2.1 Switching One- Line Diagram
2.2 Relaying and Metering One- Line Diagram

3.0 SCHEMATIC DIAGRAM

3.1 General Layout
3.2 Circuit Arrangement
3.3 Wire Designations
3.4 Terminal Designations
3.5 Marking Of Drawing Margins
3.6 Font Size
3.7 Contacts and Auxiliary Switches
3.8 Optical Connection
3.9 Panel Boundary
3.10 Residual Voltage Circuit
3.11 Legend and Notes
3.12 Source Reference
3.13 Current and Voltage Transformers
3.14 Panel Designation and Sub Circuits Designation
3.15 Relay or Devices Marked as Block

4.0 CONNECTION OR WIRING DIAGRAM

4.1 Type
4.2 Requirements

5.0 INTERCONNECTION DIAGRAM

5.1 Type
5.2 Requirements

6.0 BIBLIOGRAPHY

1.0 PURPOSE AND SCOPE

This Standard covers the guidelines that shall be observed in the preparation of Electrical Diagram, such as One-line Diagram, Schematic Diagram, Connection or Wiring Diagram and Interconnection Diagram.

General guidelines for preparing, processing & managing transmission drawings/documents are detailed in SEC Engineering Drawings Standards SEEDS-II, Rev. No. 00.

2.0 ONE-LINE DIAGRAM

A one-line diagram is a simplified representation of a circuit in single-line form and graphic symbols showing only the essential parts. It shows the manner of operation and functional grouping of an electrical system. In addition, the one-line diagram must contain the busbar configuration, status of tie breaker i.e. NO or NC, voltage, type of current & frequency, conductor cross-sections, rating and identification of electrical equipment and outgoing circuits.

The one-line diagrams are the important substation reference drawings and it shall be the first drawing to be prepared. The layout of the drawing shall be an electrical representation of the equipment arranged as simply as possible.

A substation will have “Switching” and “Relaying and Metering” One-Line Diagram separately.

2.1 Switching One-Line Diagram

Drawing TE-1933-2100-00 illustrates a typical Switching One-line Diagram. The Switching One- Line Diagrams shall be prepared as follows:

2.1.1 Appropriate standard symbols as included in the latest revision of IEEE 315/ANSI Y32.2 or IEC 60617 and SEC Engineering Drawings Standards SEEDS-II, Rev. No. 00 shall be used.

2.1.2 Major equipment symbols such as transformer, circuit breaker, disconnect switch, earth switch, potential transformer, CCVT, CVT etc., shall be arranged according to the type of bus bar arrangement in the substation (breaker and a half, double bus etc.). The circuit flow shall be from the top to the bottom with higher voltage at the top. Crossing of lines shall be avoided as far as possible.

2.1.3 Lines or equipment connected directly at power system voltages or in series with power carrying conductors shall be heavier than those connected at auxiliary/secondary voltages or in series with secondary current circuits.

2.1.4 The numbering scheme for major electrical equipment shall be applied as specified in TES-P-119.02.

2.1.5 Neutral and Ground Connections shall be shown for all equipment or components in power system, which have such connection.

2.1.6 Winding connection or vector connection and associated abbreviations for transformers (power, grounding or others), generators, reactors, capacitor banks, VTs etc., shall be shown. Phase rotation and sequence shall be indicated for all vector connection symbols.

2.1.7 Ratings such as MVA/kVA capacity, ampere capacity, voltage, frequency, impedance, interrupting capacity, transformation ratio, short time withstand rating, inductance, resistance, capacitance, number of phases etc., shall be marked for all equipment as applicable. The additional functions of any equipment not intended for normal use shall be identified under "Notes & Legend" of the drawing. Manufacture type and model number/designation of all equipment shall be listed in the Legend. The ambient conditions, particularly the ambient temperature, to which the indicated rating of the equipment refers, shall be mentioned in the Notes.

2.1.8 Busbars shall be identified with the number of phases, material/size of the conductor(s) and rated quantities of voltage, normal current, frequency, short-time withstand current and duration of short circuit.

2.1.9 The transmission lines shall be identified with the material, size and number of the conductor/cable and the far-end substation name.

2.1.10 All acronyms shall be expanded in the legend and notes of the drawing.

2.2 Relaying & Metering One-Line Diagram

Drawing TE-1933-2200-00 illustrates a Relaying and Metering one-line diagram. This will have the following requirements in addition to switching one-line diagram requirements.

2.2.1 The operating source, current and/or potential, shall be shown for instruments, meters, relays and associated switches by connecting lines together with any transformations at all levels as applicable. All equipments shall be shown in the diagram.

2.2.2 Functions of relays shall be shown by the use of appropriate device numbers per IEEE C37.2.

2.2.3 Supplementary information (like prefix, arrow mark etc., as required) shall be added to a device whenever needed for clarity. Graphic symbols for electrical and electronic devices that form part of the diagram shall be in accordance with IEEE Std 315 or IEC 60617. All secondary devices such as meters, transducers, relay operating coils etc., shall be of same size as far as possible.

2.2.4 The number of instrument transformers and their ratios shall be shown. The connected ratio shall be indicated for multi-ratio current transformers. Unused current transformer shall be shown as shorted secondary. Polarity marking shall be shown for all instrument transformers.

2.2.5 Fuse/MCB rating shall be shown.

2.2.6 Detailed equipment information and conductor material/size shall not be shown on Relaying and Metering one-line diagram.

2.2.7 Minimum information for the CTs shall be ratio (including all taps for multi-ratio CTs), accuracy class, burden, R_{CT} at specified temperature, accuracy limit or knee- point voltage, transient dimensioning factor, short circuit factor etc., as applicable. Minimum information for auxiliary CTs shall be turns ratio, knee-point or limiting voltage.

2.2.8 Minimum information for VTs shall be ratio (including extended tap, if any), accuracy class, burden etc., as applicable. Minimum information for Residual VT shall be, accuracy class, burden etc., as applicable.

2.2.9 AC/secondary circuits shall be shown as continuous lines. DC trip/close signals from various protective relays, auxiliary relays tripping and receiving relays, mechanical trip function relays/devices etc., shall be shown as dashed lines with arrow head at the terminating point to indicate the flow of signal. Each breaker or circuit switcher trip coils shall be identified (as TC1, TC2).

2.2.10 Protection signaling channels shall be shown from the protective/auxiliary relays etc., as applicable. The signal channel flow shall include protection signaling equipment, communication terminal equipment etc., as applicable.

2.2.11 Appropriate numbering scheme for major electrical equipment shall be applied as specified in TES-P-119.02.

2.2.12 Legend and Notes of the drawing shall contain the following information:

a. Each and every relay device number and its functional designation.

b. Tripping and lockout relay function, if energization of trip coils cannot be shown in the drawing part.

c. Each and every meter, transducer shall be identified.

d. All ACRONYMS shall be expanded (FOTE, PSE, FR, SOE etc.).

2.2.13 Minimum font size for letters and numbers in the drawing portion shall be as per SEEDS-II, Rev. No. 00.

3.0 SCHEMATIC DIAGRAM

A diagram which shows by means of graphic symbols, the electrical and associated signal connections and the function of a specific arrangement. The schematic diagram facilitates tracing the circuit and its functions without regard to actual physical size, shape or location of component device or parts.

A substation shall have both AC Schematic Diagrams and DC Schematic Diagrams. Drawing TE-1933-2300-00 and Drawing TE-1933-2400-00 illustrate typical AC and DC schematic diagrams respectively.

3.1 General Layout

The arrangement of the diagram shall clearly show all circuits. The AC schematic diagrams shall show the complete circuit for the set of protection and/or metering including related PT and CT secondaries. Relay set 1, set 2, backup protection and metering shall be shown on separate drawing sheets. One drawing sheet may be prepared for both sets up to 132 kV substations, if both sets of protection are located on the same panel. However, proper clarity shall be maintained between two sets. This is subjected to the approval of SEC on individual project basis.

The DC schematic diagrams shall be arranged similarly showing complete DC circuit including all wiring connected to the circuit. All relays and switches must show contact development including references for each contact. Any contact used on a drawing remote from its operating coil shall have cross-reference to the sheet number of the drawing/location where the operating coil is shown.

3.2 Circuit Arrangement

The circuits shall be arranged in functional sequence. AC circuit shall be drawn from source to load, left to right and DC circuit from positive to negative, top to bottom. However, this may not be followed rigidly where excessive line crossings would impair the clarity of the diagram. The Graphic symbols shall conform to symbols given in latest revision of IEEE 315/ANSI Y32.2 or IEC 60617 and SEC Engineering Drawings Standards SEEDS-II, Rev. No. 00 with device designation number per IEEE C37.2.

3.3 Wire Designations

Notations are required on the drawing to identify phase, polarity, etc., and shall be applied at devices (CTs, PTs, fuses, relays, etc.) and at terminal blocks. Names shall not be applied to the wires.

3.4 Terminal Designations

AC schematics shall indicate the terminals of equipment in accordance with the actual terminal connection marked by the manufacturer (e.g. H1, H2, H3, L1, L2, L3, X, Y, Z etc.) as applicable. Standard terminal designations have been applied to electrical power apparatus such as motors, generators, transformers, etc. Where no

standard terminal designation exists, reasonable designations may be used with approval from SEC.

3.5 Marking of Drawing Margins

The drawing shall be provided with Grid Reference System. Top and bottom margin of each drawing shall be marked with number 1, 2, 3 ... 8 from left to right at equal intervals. Left and right margin of each drawing shall be marked with letters A, B, C.... F at equal interval from top to bottom (to facilitate quick reference to other drawings or drawing sheets). Any location on the drawing shall be indicated by the letter of the row and number of the column. These indications shall be preceded by the sheet number, the drawing identification number or item identification number.

3.6 Font Size

Minimum font size for letters and numbers in the drawing part of AC/DC schematic diagram shall be as per SEEDS-II, Rev. No. 00.

3.7 Contacts and Auxiliary Switches

Each contacts and auxiliary switch shall be represented exactly similar to the manufacturer's manuals for easy understanding of its functions. Further special notes, marks etc., as required shall be placed to convey additional information, which shall be included under the legend notes. The type of contact whether NO, NC or CO (type a, b or c) shall be clearly shown.

3.8 Optical Connection

Optical and electrical connections shall be clearly distinguished by placing appropriate symbol as per standard on optical circuits (usually a lamp or as per applicable communication standard).

3.9 Panel Boundary

Every panel boundary shall be indicated with dash-dot line. Panel number shall be indicated for each and every panel. Reference drawing number/location shall be indicated for contact, device etc., which shows it in detail.

3.10 Residual Voltage Circuit

Whenever residual voltage circuit is connected to phase voltage circuit, the transformation means shall be indicated (e.g. auxiliary open delta VT, summation of voltages at lower level etc.).

3.11 Legend and Notes

Legend and Notes in each sheet shall indicate the device numbers or symbol of every relay with its function, meters, transducers, control switches, etc., appearing in the

sheet. Range of meters shall also be indicated in the legend. Manufacturer type and model number designations shall be listed in the legend for all equipment shown.

3.12 Source Reference

Whenever AC voltage or currents "reference" inputs are shown connected to the devices, in addition to "measuring" inputs, each of these shall be identified.

3.13 Current and Voltage Transformers

Current transformer, voltage transformer, auxiliary current transformer and residual voltage transformer shall have all details as given under clause 2.2.7 and 2.2.8.

3.14 Panel Designation and Sub Circuits Designation

Panel designation number shall be included in the drawing title for AC/DC schematic drawings. The schematic diagram for a functional unit or part of installation shall be divided into functional groups/sub-circuits, e.g. control, signaling, interlocks, alarms, synchronizing, protection, measurements, etc. The function of the circuits/sub-circuits shall be noted in the abbreviated form on the top of the respective circuit.

3.15 Relay or Devices Marked as Block

Whenever any relay module or a device is marked as "block" in AC or DC schematic diagrams, its device number per ANSI standard, its manufacturer's type designation and its location on the panel shall be indicated on the block.

4.0 CONNECTION OR WIRING DIAGRAM

A diagram, which shows the connections of an installation or its component parts. It may cover internal or/and external connections and contains such details needed to make or trace connections that are involved.

Figure 33-01 illustrates a typical Line Connection Diagram.

The purpose of a connection or wiring diagram is to:

Furnish information showing electrical connections between component devices.

Facilitate determination of electrical connection adequacy.

Facilitate maintenance of equipment.

Supplement schematic diagram by relating circuit information with the actual wiring and location of component devices or parts.

4.1 Type

Connection diagrams shall be of the Interrupted-Line type. Further the destination may be given as letters and/or numbers.

4.2 Requirements

The view(s) of equipment should clearly show terminals as seen during wiring. Each terminal shall clearly indicate each wire connected to it and each wire's individual destination. The symbol of components shall be simple geometric shape with terminals marked as circles at the periphery. The designation of components shall correspond to those shown on the schematic drawing. Legend and core details shall be incorporated in the drawing.

5.0 INTERCONNECTION DIAGRAM

A diagram that shows external connections to be made between unit assemblies or equipment. The internal connection of the unit assemblies or equipment is usually omitted. It may also be used as a planning guide for establishing interconnecting cable requirements.

Figure 33-02 illustrates a typical interconnection diagram.

5.1 Type

Interconnection diagrams shall be wire type (showing each wire) utilizing the continuous line highway method with cable numbers. The wiring type of interconnection diagram shall show individually, each connection to be made between major equipments. In continuous line highway diagrams, each connecting line shall be brought out from its termination for a short distance, identified, and then grouped with others having the same general destination into a common line. Each connection shall have near one termination, utilizing the continuous line highway method with cable numbers shown in separate breaks, the wire run code and the function (if applicable).

5.2 Requirements

The arrangement of equipments shall provide the utmost clarity. Device identification, terminal numbers and wire numbers shall be the same as those used on the schematic diagram. The core number, cable number, cable size should be incorporated in the drawing. Further panel number and designation, DC schematic diagram number and rear view panel wiring diagram number shall be incorporated in the drawing. Additional data such as wire length, termination requirements and installation instructions may be included in the interconnection information.

6.0 BIBLIOGRAPHY

6.1 ANSI Y32.2, IEEE Std 315, "Graphic Symbols for Electrical Electronics Diagrams"

6.2 IEEE C37.2, Standard Electrical Power System Device Function Numbers and Contact Designations

6.3 IEC 60617, Graphical Symbols for diagrams (All Parts)

6.4 IEC 61082, Preparation of Documents used in Electro-technology (All Parts).

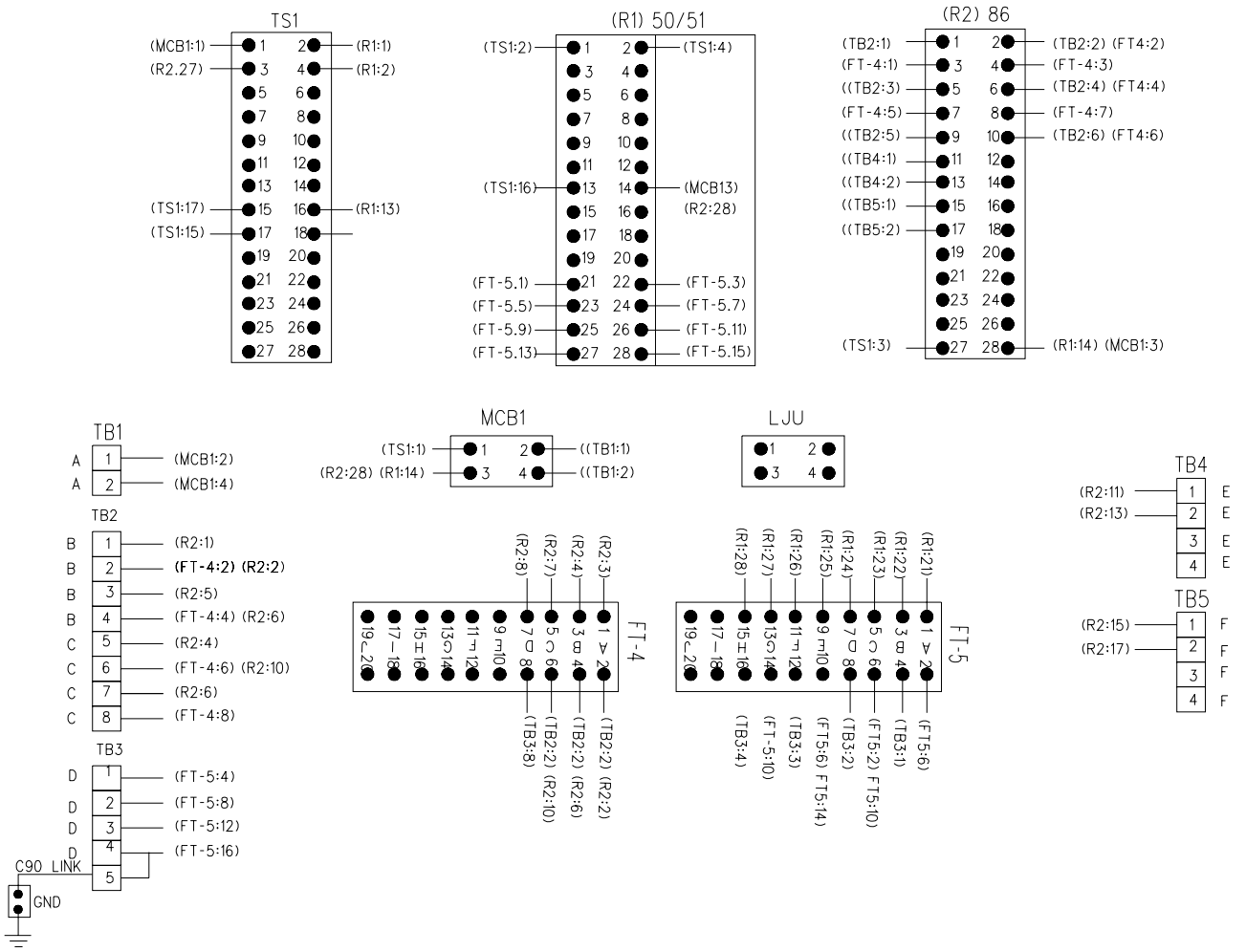

LEGEND

R1 - OVERCURRENT
TS1 - TEST BLOCK
R2 - TRIP RELAY
FT-4 - TRIP ISOLATION
FT-5 - OVERCURRENT CT ISOLATION
TB1 - DC SUPPLY
TB2 - CB TRIPPING
TB3 - OVER CURRENT CT
TB4 - ANNUNCIATION
TB5 - SCADA
LJU - TELEPHONE LINE JACK UNIT

FT-4 TRIP ISOLATION

A - CB A601 TC1 ISOLATION
B - CB A601 TC2 ISOLATION
C - CB A301 TC1 ISOLATION
D - CB A302 TC2 ISOLATION
E - SPARE
F - SPARE
G - SPARE

MULTICORE SCHEDULE

A - 7 CORE TO DC DISTRIBUTION
B - 7 CORE TO A601 CB
C - 7 CORE TO A301 CB
D - 7 CORE TO A601 OVERCURRENT CT
E - 19 CORE TO ANNUNCIATOR
F - 19 CORE TO SCADA

Figure 33-01: Typical Interrupted Line Connection Diagram

DWG. # TE-1933-0100-00

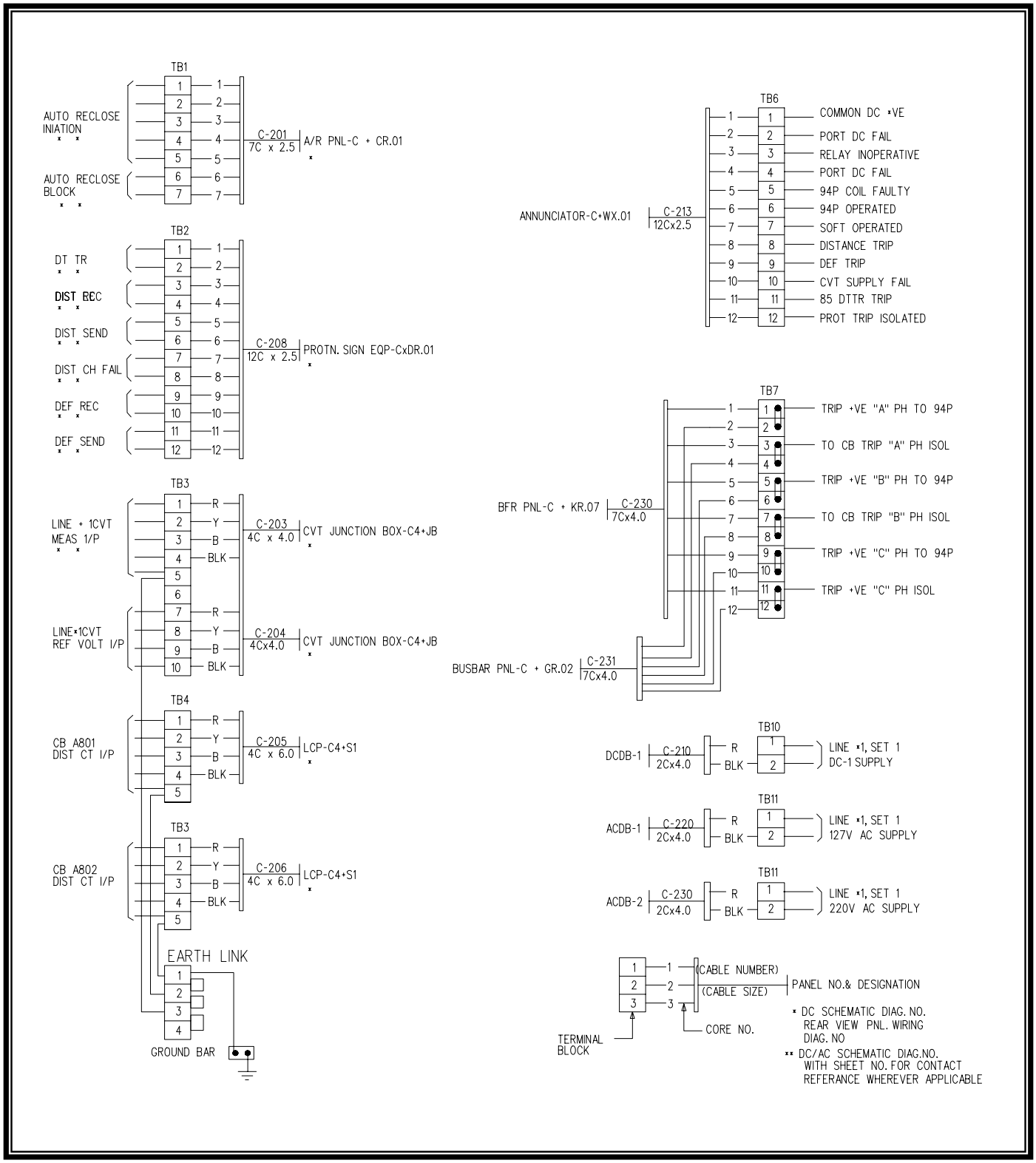

Figure 33-02: Typical Highway Interconnection Diagram

DWG. # TE-1933-0200-00

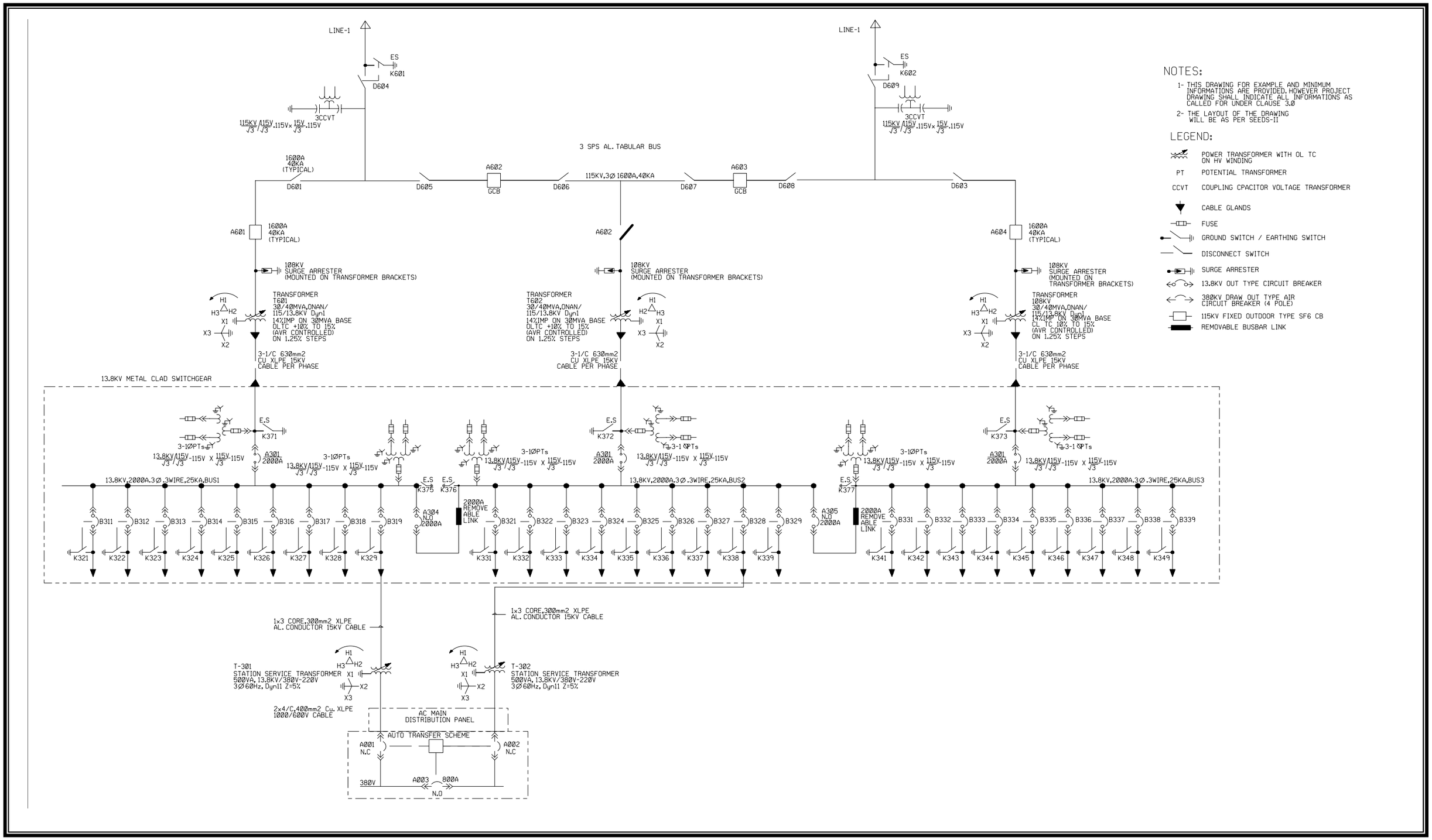

TYPICAL SWITCHING ONE LINE DIAGRAM

DWG# TE-1933-2100-00

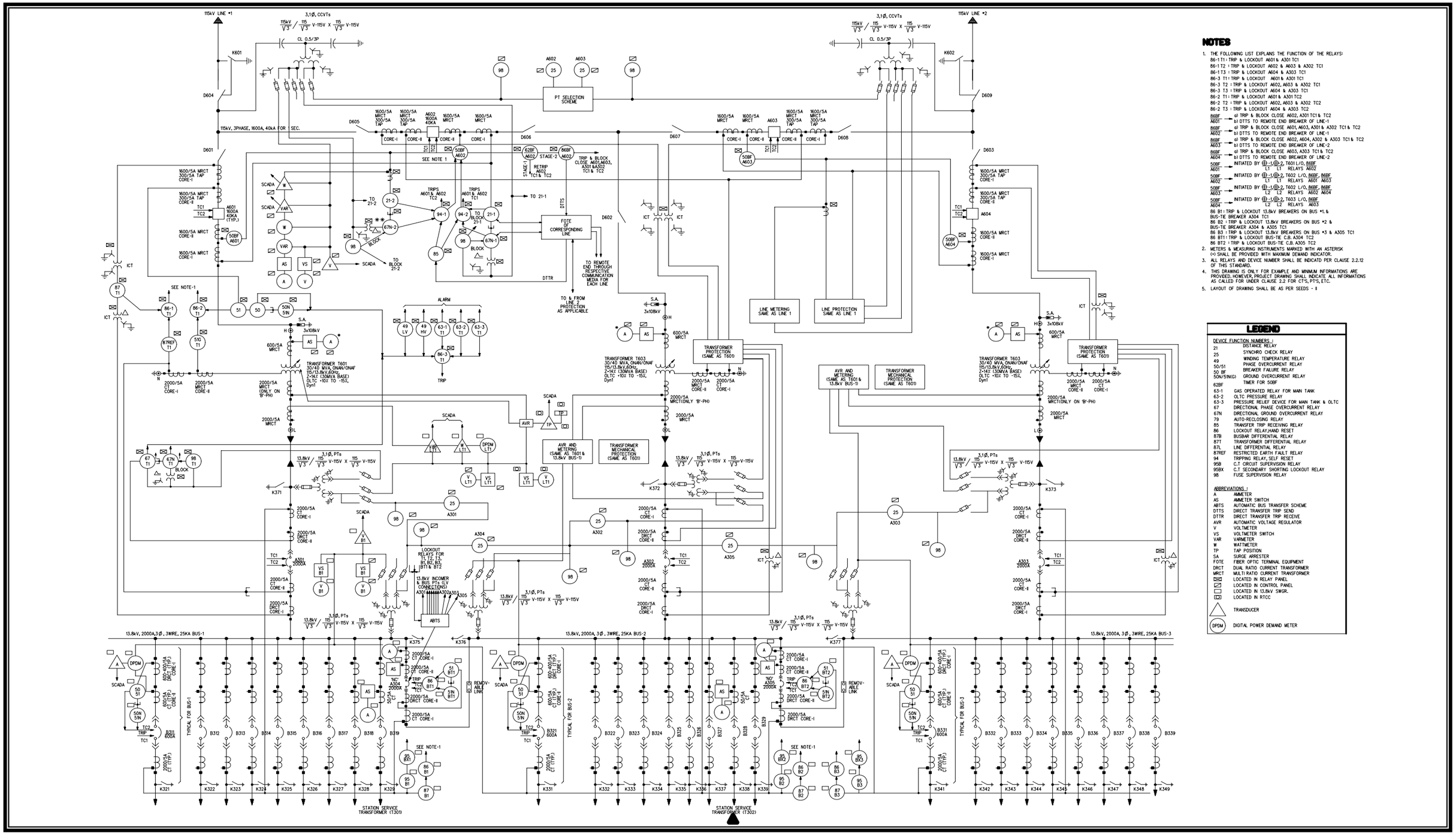

NOTES

1. THE FOLLOWING LIST EXPLAINS THE FUNCTION OF THE RELAYS:
   - 86-1 T1 : TRIP & LOCKOUT A601 & A301 TC1
   - 86-1 T2 : TRIP & LOCKOUT A602 & A603 & A302 TC1
   - 86-1 T3 : TRIP & LOCKOUT A604 & A303 TC1
   - 86-3 T1 : TRIP & LOCKOUT A601 & A301 TC1
   - 86-3 T2 : TRIP & LOCKOUT A602, A603 & A302 TC1
   - 86-3 T3 : TRIP & LOCKOUT A604 & A303 TC1
   - 86-2 T1 : TRIP & LOCKOUT A601 & A301 TC2
   - 86-2 T2 : TRIP & LOCKOUT A602, A603 & A302 TC2
   - 86-2 T3 : TRIP & LOCKOUT A604 & A303 TC2
   - 86BF A601 → a) TRIP & BLOCK CLOSE A602, A301 TC1 & TC2; b) DTTS TO REMOTE END BREAKER OF LINE-1
   - 86BF A602 → a) TRIP & BLOCK CLOSE A601, A603, A301 & A302 TC1 & TC2; b) DTTS TO REMOTE END BREAKER OF LINE-1
   - 86BF A603 → a) TRIP & BLOCK CLOSE A602, A604, A302 & A303 TC1 & TC2; b) DTTS TO REMOTE END BREAKER OF LINE-2
   - 86BF A604 → a) TRIP & BLOCK CLOSE A603, A303 TC1 & TC2; b) DTTS TO REMOTE END BREAKER OF LINE-2
   - 50BF A601 → INITIATED BY (Φ-1 L1, Φ-2 L1), T601 L/O, 86BF L1 RELAYS A602
   - 50BF A602 → INITIATED BY (Φ-1 L1, Φ-2 L1), T602 L/O, 86BF, 86BF L1 RELAYS A601 A603
   - 50BF A603 → INITIATED BY (Φ-1 L2, Φ-2 L2), T602 L/O, 86BF, 86BF L2 RELAYS A602 A604
   - 50BF A604 → INITIATED BY (Φ-1 L2, Φ-2 L2), T603 L/O, 86BF L2 RELAYS A603
   - 86 B1 : TRIP & LOCKOUT 13.8kV BREAKERS ON BUS #1 & BUS-TIE BREAKER A304 TC1
   - 86 B2 : TRIP & LOCKOUT 13.8kV BREAKERS ON BUS #2 & BUS-TIE BREAKER A304 & A305 TC1
   - 86 B3 : TRIP & LOCKOUT 13.8kV BREAKERS ON BUS #3 & A305 TC1
   - 86 BT1 : TRIP & LOCKOUT BUS-TIE C.B. A304 TC2
   - 86 BT2 : TRIP & LOCKOUT BUS-TIE C.B. A305 TC2
2. METERS & MEASURING INSTRUMENTS MARKED WITH AN ASTERISK (*) SHALL BE PROVIDED WITH MAXIMUM DEMAND INDICATOR.
3. ALL RELAYS AND DEVICE NUMBER SHALL BE INDICATD PER CLAUSE 2.2.12 OF THIS STANDARD.
4. THIS DRAWING IS ONLY FOR EXAMPLE AND MINIMUM INFORMATIONS ARE PROVIDED, HOWEVER, PROJECT DRAWING SHALL INDICATE ALL INFORMATIONS AS CALLED FOR UNDER CLAUSE 2.2 FOR CT'S, PT'S, ETC.
5. LAYOUT OF DRAWING SHALL BE AS PER SEEDS - II

LEGEND

DEVICE FUNCTION NUMBERS :

21	DISTANCE RELAY
25	SYNCHRO CHECK RELAY
49	WINDING TEMPERATURE RELAY
50/51	PHASE OVERCURRENT RELAY
50 BF	BREAKER FAILURE RELAY
50N/5N(G)	GROUND OVERCURRENT RELAY
62BF	TIMER FOR 50BF
63-1	GAS OPERATED RELAY FOR MAIN TANK
63-2	OLTC PRESSURE RELAY
63-3	PRESSURE RELIEF DEVICE FOR MAIN TANK & OLTC
67	DIRECTIONAL PHASE OVERCURRENT RELAY
67N	DIRECTIONAL GROUND OVERCURRENT RELAY
79	AUTO-RECLOSING RELAY
85	TRANSFER TRIP RECEIVING RELAY
86	LOCKOUT RELAY,HAND RESET
87B	BUSBAR DIFFERENTIAL RELAY
87T	TRANSFORMER DIFFERENTIAL RELAY
87L	LINE DIFFERENTIAL RELAY
87REF	RESTRICTED EARTH FAULT RELAY
94	TRIPPING RELAY, SELF RESET
95B	C.T CIRCUIT SUPERVISION RELAY
95BX	C.T SECONDARY SHORTING LOCKOUT RELAY
98	FUSE SUPERVISION RELAY

ABBREVIATIONS :

A	AMMETER
AS	AMMETER SWITCH
ABTS	AUTOMATIC BUS TRANSFER SCHEME
DTTS	DIRECT TRANSFER TRIP SEND
DTTR	DIRECT TRANSFER TRIP RECEIVE
AVR	AUTOMATIC VOLTAGE REGULATOR
V	VOLTMETER
VS	VOLTMETER SWITCH
VAR	VARMETER
W	WATTMETER
TP	TAP POSITION
SA	SURGE ARRESTER
FOTE	FIBER OPTIC TERMINAL EQUIPMENT
DRCT	DUAL RATIO CURRENT TRANSFORMER
MRCT	MULTI RATIO CURRENT TRANSFORMER
▨	LOCATED IN RELAY PANEL
▨	LOCATED IN CONTROL PANEL
▭	LOCATED IN 13.8kV SWGR.
⊡	LOCATED IN RTCC
△	TRANSDUCER
(DPDM)	DIGITAL POWER DEMAND METER

TYPICAL RELAY AND METERING ONE LINE DIAGRAM

DWG# TE-1933-2200-00

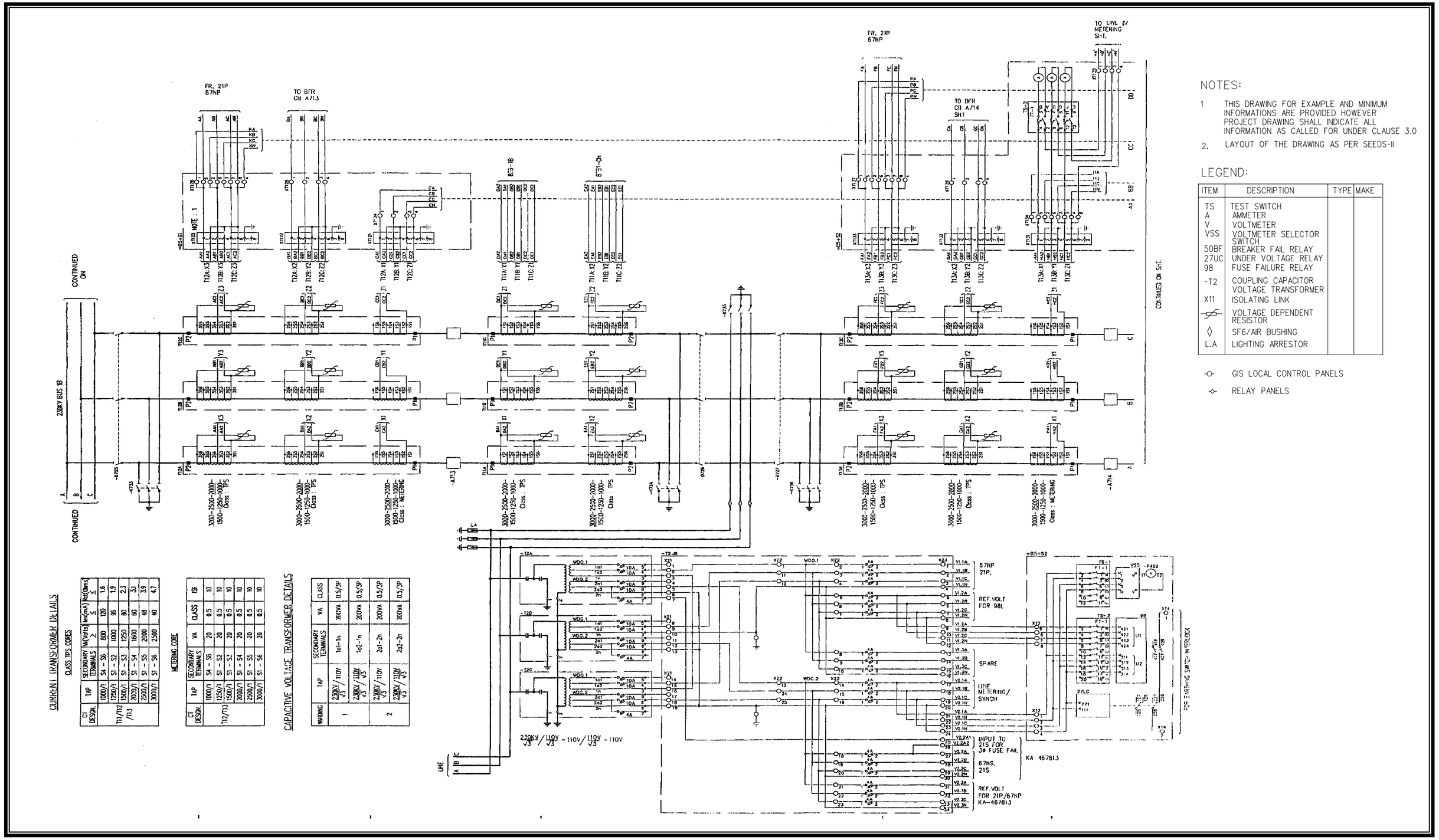

NOTES:

1 THIS DRAWING FOR EXAMPLE AND MINIMUM INFORMATIONS ARE PROVIDED HOWEVER PROJECT DRAWING SHALL INDICATE ALL INFORMATION AS CALLED FOR UNDER CLAUSE 3.0

2. LAYOUT OF THE DRAWING AS PER SEEDS-II

LEGEND:

ITEM	DESCRIPTION	TYPE	MAKE
TS	TEST SWITCH		
A	AMMETER		
V	VOLTMETER		
VSS	VOLTMETER SELECTOR SWITCH		
50BF	BREAKER FAIL RELAY		
27UC	UNDER VOLTAGE RELAY		
98	FUSE FAILURE RELAY		
-T2	COUPLING CAPACITOR VOLTAGE TRANSFORMER		
X11	ISOLATING LINK		
	VOLTAGE DEPENDENT RESISTOR		
	SF6/AIR BUSHING		
L.A	LIGHTING ARRESTOR		

GIS LOCAL CONTROL PANELS

RELAY PANELS

DWG# TE-1933-2300-00

TYPICAL AC ELEMENTARY DIAGRAM

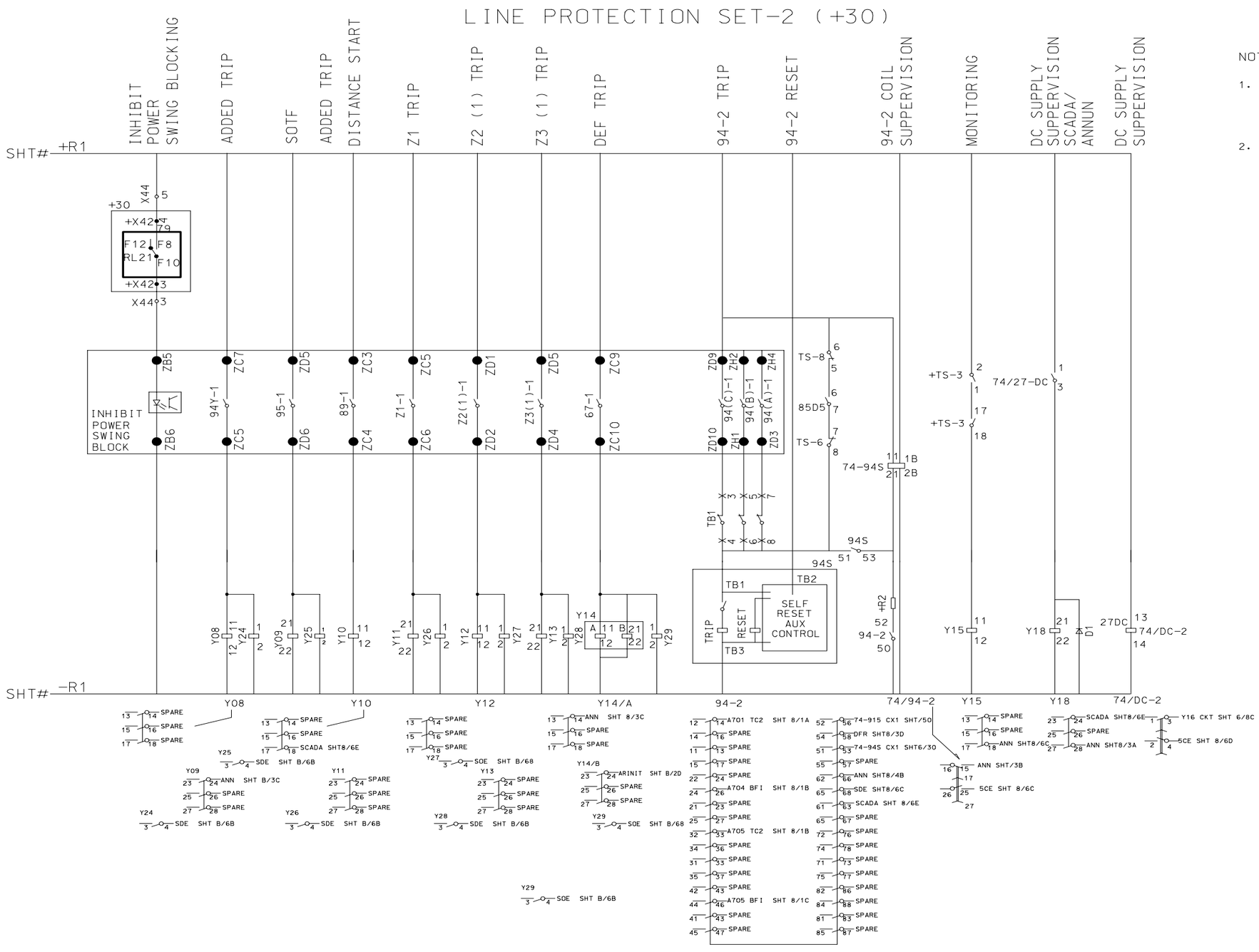

NOTES:

1. THIS DRAWING FOR EXAMPLE AND MINIMUM INFORMATIONS ARE PROVIDED . HOWEVER PROJECT DRAWING SHALL INDICATE ALL INFORMATIONS AS CALLED FOR UNDER CLAUSE 3.0

2. LAYOUT OF THE DRAWING SHALL BE AS PER SEEDS-II

RELAY MODULES AND LIST (e.g)

1	2	3	4			

1. POWER SUPPLY

LEGEND:

RELAY	DESCRIPTION	TYPE	NAME
21S/ 67NS	DISTANCE + DEF RELAY	MICRO.	GECA
TB-1	TEST BLOCK		GECA
TS-3 TO TS-6	TEST SWITCH FOR TRIP ISOLATION	FT-19R	ABB
94S	SET-2 TRIP RELLAY	LOR/SR	ES
Y08/ Y09	AUX RELY SIG FOR AIDED TRIP / SO7F	RXMB1	ABB
Y10/ Y11	AUX RELY SIG FOR DIST START / ZONE1 TRIP	RXMB1	ABB
Y12/ Y13	AUX RELY SIG FOR ZONE2/ZONE3 TRIP	RXMB1	ABB
Y14	AUX RELY SIG FOR DEF TRIP	RXMB1	ABB
Y15/ Y16	AUX RELY SIG FOR FI MONITORING/DC FAIL	RXMB1	ABB
74/94-2	TRIP RELY COIL SUPERVISION RELY	SPERICI	ABB
74/DC-2	DC SUPPLY SUPERVISION RELY	MVAX12	GEC
R2	EXTERNAL RESISTOR	MVAX12	ABB
D1	FREE WHEELING DIODE		
Y24 TO Y29	AUXILARY RELY FOR SOE	AVR	E-MUX

—o— LINE PROTECTION SET-2 PANEL (+30)

—o— AUTO RECLOSE PANEL (+300)

DWG# TE-1933-2400-00

TYPICAL DC ELEMENTARY DIAGRAM