الشركة السعودية للكهرباء
Saudi Electricity Company

REVISIONS				
No.	Date	DESCRIPTION	ORIG'D	CERT.	APP'D
1					
2					
3					

TES-P-119.34

Revision no. 0

APPLICATION OF SYSTEM GROUNDING

PROPRIETARY INFORMATION

This document contains proprietary information developed by and for exclusive use of Saudi Electricity Company. Your acceptance of the document is an acknowledgement that it must be used for the identified purpose/application and during the period indicated. It cannot be used or copied for any other purposes nor released to others without prior written authorization of Saudi Electricity Company. Saudi Electricity Company will not be responsible for misuse and/or misapplication, and any harm resulting therefrom. Saudi Electricity Company also reserves the right to take any necessary actions to protect its interest against unauthorized use.

ORIGINATED BY	CERTIFIED BY	APPROVED BY
Engr. Mohammad H. Al-Mubarak Division Manager, Transmission Substation Specifications	**Engr. Abdullah M. Al-Garni** Department Manager, Transmission Standards & Specifications	**Engr. Saleh N. Al-Sohaibani** Vice President, Engineering & Projects
Date of Approval: December 15, 2007		

TRANSMISSION ENGINEERING STANDARD

TABLE OF CONTENTS

1.0 PURPOSE AND SCOPE

2.0 NEUTRAL GROUNDING

2.1 Solid Grounding
2.2 Obtaining System Neutral
2.3 Multiple Power Sources
2.4 Neutral Earthing Resistor (NER)
2.5 Neutral Grounding Reactor (NGR)

3.0 DELTA SYSTEM GROUNDING

3.1 Grounding Transformer
3.2 Grounding Transformer Arrangements

4.0 BIBLIOGRAPHY

1.0 PURPOSE AND SCOPE

Two type of groundings are adopted in power systems i.e. equipment grounding and system grounding. Design of equipment grounding is furnished in TES-P-119.10. Present standard is for design of system grounding as applicable for Saudi Electricity Company (SEC) system.

2.0 Neutral Grounding

System grounding is for the purpose of controlling the voltage to ground within predictable limit. It also provides flow of currents for detection of faults. System grounding can be solid grounding or impedance grounding with impedance element as resistor or reactor. In SEC system 380kV, 230kV, 115kV and 69kV systems are solidly grounded. 110kV and 132kV system are either reactor or solidly grounded as specified in Project Technical Specification (PTS). Systems with rated voltage 34.5kV and below are either resistance grounded or solidly grounded as specified in PTS.

2.1 Solid Grounding

2.1.1 Zero sequence reactance

Solid grounding refers to the connection of the neutral of a generator, power transformer or grounding transformer directly to the ground. Because of the reactance of the grounded generator or transformer in series with the neutral circuit, a solid ground connection does not provide a zero-impedance neutral circuit. If the reactance of the system zero-sequence circuit is too high with respect to the system positive-sequence this will result in higher transient over voltages.

2.1.2 Co-efficient of Grounding

To ensure benefits of solid grounding, system shall be effectively earthed where the line to ground fault current shall be at least 60% of three – phase to ground short circuit current value and coefficient of grounding (which is defined as ratio of phase-to-ground power frequency voltage on a sound phase during fault on selected location to line-to-line power frequency voltage at selected location with the fault removed) does not exceed 80 percent which is generally the case when $0 < X_0/X_1 < 3$ and $0 < R_0/X_1 < 1$ where R_0 and X_0 are system zero sequence resistance and reactance respectively and X_1 is positive sequence reactance.

2.2 Obtaining System Neutral

System grounding for neutral is obtained from source generators or transformers with wye connected windings.

2.3 Multiple Power Sources

For solid grounding system with multiple sources (transformers and generators), each source shall be solidly grounded. For other system of grounding also it is preferable to ground each source, unless otherwise specified in the PTS.

2.4 Neutral Earthing Resistor (NER)

Neutral Earthing Resistor is adopted to reduce mechanical stresses in circuits and apparatus carrying fault currents, reduce flash hazard to personnel etc. Resistance grounding can be further classified as high resistance grounding and low resistance grounding. High resistance grounding system is one in which ground fault currents are less than 10A and in low resistance grounding system the ground fault current is minimum 100A. In SEC system the ground fault current on 13.8kV of 132/13.8kV, 60MVA YNynd1 is restricted to 800A by providing 10 ohms, 5 seconds rated resistors. For other power transformers it shall be as specified in PTS. High resistance is used when fault clearing is not necessary and hence not recommended for SEC system. The fault current through neutral grounding shall be higher than sum of the charging current due to power transformers, cables etc.

Using of Neutral Earthing Resistor increases voltages during line to ground fault current. Resistor value shall be selected such that transient voltage during line to ground fault shall not exceed 250% rated voltage and calculation for the same shall be submitted.

2.5 Neutral Grounding Reactor (NGR)

2.5.1 Fault Reduction and asymmetrical Current

The impedance of Neutral Grounding Reactor adds to impedance of grounding system. The reduction in earth fault current depends on the relative magnitude of the of NGR impedance compared to the impedance of fault path without NGR and fault type. In reactance grounded system the available ground fault current shall be minimum 25% and preferably 60% of three phase fault current to prevent serious transient over voltages. For single line to ground faults and double line to ground faults near the substation, dramatic decrease in the fault current can be achieved due to NGR than for a fault current at the end of the feeder. However for double line to ground fault increasing the reactor impedance to limit the fault current will make the fault appear more like line to line fault.

NGR's effect on the ground fault is not limited to symmetrical AC current but also on the asymmetrical current. The rate of decay of DC offset current decreases because of increase in X/R value i.e. the DC component of the fault current remains at a higher value for longer relative to AC component. Thus the DC offset partially cancels some of the reduction in fault current due to NGR.

2.5.2 Voltage Regulation

Unbalanced loading on the phases of the distribution system will cause the current in the neutral. The voltage developed across the NGR will cause the neutral point between phases to shift. Depending on the direction of neutral shift, which is governed by the angle of neutral current, each line to neutral voltage will be higher or lower than before. Transformer OLTC adjust the taps to keep the voltage within specified limits. However at higher value of neutral current the shift may become significant. The best solution is to balance the loading on transformer.

2.5.3 Temporary Over voltage (TOV)

Just as unbalanced current, ground fault current also can cause a neutral phase shift. In this case the neutral shift causes the potential between the system ground and the un-faulted phase to rise. This results in TOV that lasts until the ground fault is cleared. The addition of NGR impedance increases the magnitude of the neutral shift, and thus the TOV on the un-faulted phases. Arrester TOV capabilities shall be selected accordingly.

3.0 Delta System Grounding

Delta winding of power transformer, when it is used only as stabilizing winding and not connected to load shall be grounded at one phase corner per TES-P-119.10. However when delta winding is connected to load then it shall be grounded through a grounding transformer to derive solid grounding.

Grounding transformers shall be applied to ungrounded three-phase power system to provide a source of ground–fault current during line-to-ground faults, limit the magnitudes of transient over voltages when re-striking ground faults occurs and stabilize the neutral.

3.1 Grounding Transformer

3.1.1 Introduction

Three types of grounding transformers are commonly available:

- Zigzag grounding transformer
- Grounded neutral wye-delta
- T-connected

For SEC delta system the grounding is generally through zigzag grounding transformer.

3.1.2 Grounding Transformer Operations

The grounding transformer provides a less impedance path for zero sequence current I_o during ground faults and during normal conditions grounding transformer appears as high impedance and just a small magnetizing current flows in the transformer winding.

3.2 Grounding Transformer Arrangements

Fig. 34-01 and fig 34.02 illustrate two methods of connecting grounding transformers to ungrounded system. The protection requirements indicated in this drawing are for illustration purpose only. Contractor/Manufacturer shall meet the requirements as specified in the Project Technical Specification (PTS).

a. Grounding Transformer with dedicated breaker

Fig. 34-01 indicates connection of grounding transformer to the bus through its own dedicated breaker. The grounding transformer provides 3Io to the system when a ground fault occurs. If the fault is on the associated feeder, the feeder ground over current relay would sense this fault current and isolate it by tripping the feeder breaker "C". Ground faults located between the power transformer secondary and main breaker B would be sensed by main breaker "B" ground over current relay 50/51N and cleared by breaker "B". Ground faults at this location are the only faults that can be sensed by this 50/51N relay. Consequently, it does not have to coordinate over any other protective device and can be assigned minimum tap, time dial and instantaneous unit settings. The grounding transformer neutral over current relay 51N will trip high side breaker A for low side phase-ground bus faults. This same action would result for feeder phase to ground faults that are not properly cleared by the feeder relaying or feeder breaker. Faults within the grounding transformer would result in operation of grounding transformer relay 50 and this will trip the grounding transformer breaker "D", thereby leaving the power system to operate in ungrounded mode. Under such circumstances either the grounding transformer shall be repaired or replaced as quickly as possible or alternatively additional grounding transformer can be provided through bus section breaker.

b. Grounding Transformer Tapped directly to Transformer delta winding

Fig. 34-02 illustrates an arrangement where the grounding transformer is tapped directly to the delta winding of power transformer. This configuration provides a common zone of protection, i.e. any fault in the grounding transformer will result in tripping the associated high side breaker "A", resulting in the isolation of both the power transformer and the grounding transformer. Such an arrangement ensures that the secondary system will always be adequately grounded, but it results in total system loss for grounding transformer faults.

Identical grounding transformer over current scheme are indicated in Fig 34-01 & Fig 34-02. The "51N" designates a single time-over current relay connected in the neutral of the grounding transformer. The relay provides both primary and backup functions, depending upon the ground fault location.

The "50" designates three instantaneous over current relays element. The "50" devices are connected to C.T.'s that are arranged in a delta configuration. This protection scheme can employ very sensitive settings and is used to sense and isolate faults occurring within the grounding transformer. The "50" devices do not have to be coordinated above any other protective relays. They sense no current flows for faults external to the grounding transformer zone of protection. In fact, for ground faults external to the grounding transformer zone of protection, the resultant Io current circulates around the delta connected C.T.'s and does not enter the "50" relay elements.

More than a single factor must be considered when selecting the ratio of C.T.'s employed in grounding transformer protection schemes. These factors include the magnitude of Io flow, the current ranges of the associated protective relays, the magnitude of phase faults that may occur within the grounding transformer and whether or not the grounding transformer C.T.'s maybe interconnected with some other C.T.'s in more complex protection arrangements.

4.0 BIBLIOGRAPHY

4.1 IEEE 142, "Recommended practice for Grounding of industrial and commercial Power Systems 1991".

4.2 C62.92.1, "Guide for Application of Neutral Grounding in Electrical Utility System, Part I : Introduction".

4.3 C62.92.5, "Guide for Application of Neutral Grounding in Electrical Utility System, Part V: Transmission Systems and Sub transmission Systems".

4.4 C62.92.4, "Guide for Application of Neutral Grounding in Electrical Utility System, Part IV: Guide for Application of Neutral Grounding in Electrical Utility System, Part IV: Distribution".

4.5 Grounding Transformer Applications and Associated Protection Schemes, E.R. Detjan & K.R. Shah, IEEE Transaction on Industry Applications, Vol. 28, Issue 4, Pages 788-796, July – Aug 1992.

4.6 52-TMSS-01, Grounding Transformer, 13.8kV,33 kV, OR 34.5 kV.

4.7 52-TMSS-02, Air Core Grounding Reactor for 11 kV through 132kV System.

4.8 57-TMSS-01, Neutral Grounding Resistor, 11 kV through 34.5 kV.

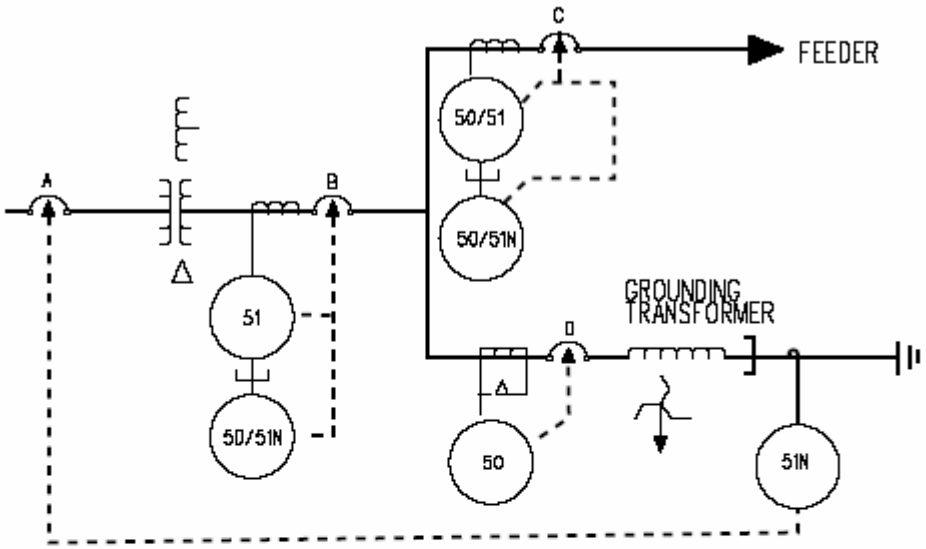

FIGURE 34-01: GROUNDING TRANSFORMER WITH DEDICATED BREAKER

DWG ▸ TE-1934-01-00

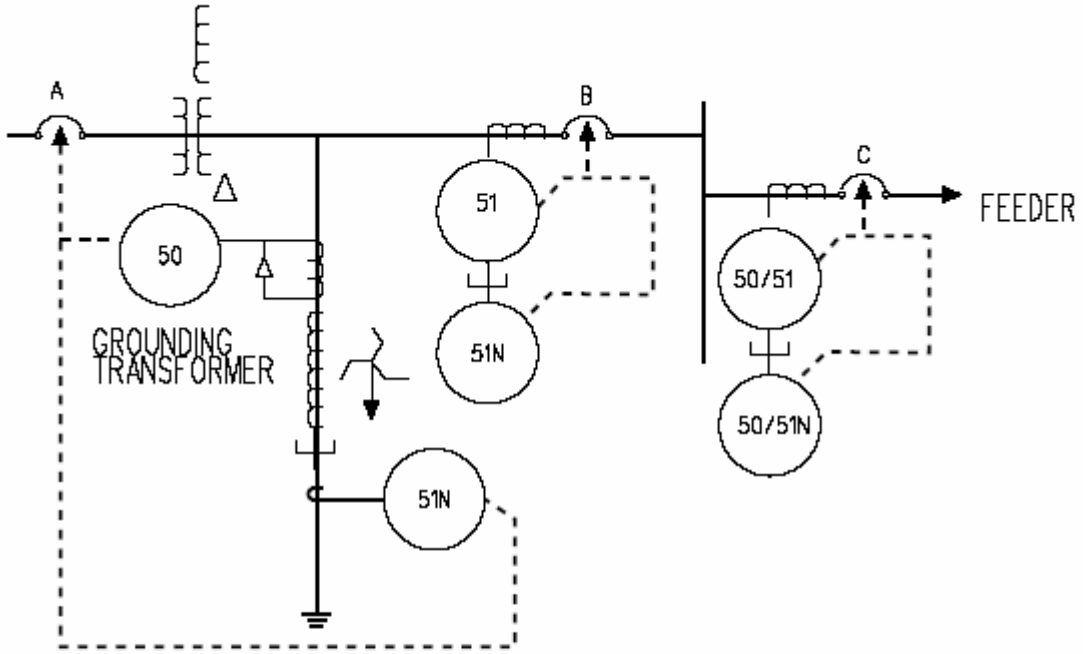

FIGURE 34-02: GROUNDING TRANSFORMER DIRECTLY CONNECTED

DWG # TE-1934-02-00