الشركة السعودية للكهرباء
Saudi Electricity Company

REVISIONS				
No.	Date	DESCRIPTION	ORIG'D	CERT.	APP'D
1					
2					
3					

TES-P-119.36

Revision No. 0

POWER TRANSFORMER VECTOR GROUP MATCHING

PROPRIETARY INFORMATION

This document contains proprietary information developed by and for exclusive use of Saudi Electricity Company. Your acceptance of the document is an acknowledgement that it must be used for the identified purpose/application and during the period indicated. It cannot be used or copied for any other purposes nor released to others without prior written authorization of Saudi Electricity Company. Saudi Electricity Company will not be responsible for misuse and/or misapplication, and any harm resulting therefrom. Saudi Electricity Company also reserves the right to take any necessary actions to protect its interest against unauthorized use.

ORIGINATED BY	CERTIFIED BY	APPROVED BY
Engr. Abdulrahman G. Al-Ghayhab Division Manager (A), Transmission Substations Specifications	**Engr. Abdullah M. Al-Garni** Department Manager, Transmission Standards & Specifications	**Engr. Saleh N. Al-Sohaibani** Executive Director, Engineering & Projects
Date of Approval: July 06, 2011		

TRANSMISSION ENGINEERING STANDARD

TABLE OF CONTENTS

1.0 SCOPE

2.0 PURPOSE

3.0 PARALLEL OPERATION OF TRANSFORMERS IN THREE PHASE SYSTEM

3.1 Parallel Operation Requirement

3.2 Paralleing new Power Transformer with Existing Power Transformer

3.3 Matching Three Phase Connections and Phase Relations

3.4 Difference in ratio and circulating current

4.0 BIBLIOGRAPHY

1.0 SCOPE

This standard covers requirement of Power Transformer Vector Group Matching in Transmission Substations of Saudi Electricity Company (SEC), Saudi Arabia.

2.0 PURPOSE

The purpose of this standard is to define the requirements for Parallel operation of transformers for various vector groups applicable for SEC Transmission substation which are specified in Table 02- 6 of TES-P-119.02. Power Transformer shall meet all the requirements specified in 53-TMSS-01 and 53-TMSS-02.

3.0 PARALLEL OPERATION OF TRANSFORMERS IN THREE PHASE SYSTEM

3.1 Parallel Operation Requirement

Parallel operation means direct terminal-to-terminal connection between transformers in the same installations. Two-winding transformers are considered here. The same logic shall be used for three single phase transformers.

Requirement for sucessful parallel operaions are:

3.1.1 The same phase-angle relation i.e. clock-hour number (Possibility of paralling different vector groups are discussed separately)

3.1.2 The same voltage ratio with some tolerance and similar tapping range;

3.1.3 The same relative short-circuit impedance – with some tolerance. This also means that the variation of relative impedance across the tapping range should be similar for the two transformers.

3.1.4 Same phase sequence

3.1.5 The same power rating preferably. However mismatch of relative loading of not more than 10% between transformers of non-identical design shall be regarded as reasonable per clause 6.0 of IEC 60076-8.

3.1.6 Specified and guaranteed ratio and impedance parameters are subject to tolerances, according to table 1 of IEC 60076-1. However in special cases such as when the transformer is to be paralleled with existing transfomer etc., narrower impedance tolerance shall be specified in the Scope Of Work and Technical Specification (SOW/TS).

3.2 Paralleling new Power Transformer with Existing Power Transformer

It is important that Scope Of Work and Technical Specification for new transformer which is intended for parallel operation with a specific existing transformer shall contain the existing transformer Technical Data. The following shall be considered:

3.2.1 It is not advisable to combine transformers of widely different power rating The percentage impedance for optimal designs varies with the size of the transformer.

3.2.2 Transformers built according to different design concepts are likely to present different impedance levels and different variation trends across the tapping range.

3.2.3 Any mismatch data shall be checked properly such as the tapping voltage. Also whether the staggering steps permit reasonable operation of transformer in parallel shall also be checked.

3.3 Matching Three Phase Connections and Phase Relations

The common three-phase transformer connections are shown in figure 36-01. In each block, one or two clock numbers are indicated by permutation. This means, for example, that if the secondary terminals of a transformer with clock number 1 were quite simply re-named by cyclic permutation (II becomes I, III becomes II and I becomes III), then the phase displacement is changed by 120 electrical degrees to clock number 5. Consequently, transformers with connection clock numbers differing by 4 or 8 can be connected in parallel after cyclic permutation of the connections to the line on either side of the transformer.

It is even possible to combine transformers having clock numbers 1 or 5 with transformers having clock numbers 11 or 7 by reversing the phase sequence on both sides of either transformer. The requirements are illustrated in Figure 36-01.

Parallel connections of Dyn and Yzn are not recommended because of different zero sequence impedance properties.

3.4 Difference in ratio and circulating current

As already stated in clause 3.1.2 transformer to be paralled shall have the same voltage ratio.If two transformers with slight different ratios are energized this will result in circulating current between the transformers. The magnitude of current is derived as follows:

The difference between the induced no-load voltage U_1 and U_2 expressed as fraction of "p" of the average voltage is given by :

$$p = (U_1 - U_2) / \frac{(U_1 + U_2)}{2}$$

$$= \frac{U_1 - U_2}{U_r} \qquad \text{(Eq.36-1)}$$

Where:
- P = Fraction of rated voltage
- U_1 = Induced no-voltage for Transformer No. 1
- U_2 = Induced no-voltage for Transformer No. 2
- U_r = Rated Voltage

The circulating current I_c and the corresponding reactive power Q_c expressed as a fraction of rated current I_r and rated power S_r of the respective transformers will be approximately

$$\frac{I_c}{I_{r1}} = \frac{Q_c}{S_{r1}} = \frac{p}{Z_1 + \frac{S_{r1}}{S_{r2}} x Z_2} \qquad \text{(Eq. 36-2)}$$

$$\frac{I_c}{I_{r2}} = \frac{Q_c}{S_{r2}} = \frac{(-p)}{Z_2 + \frac{S_{r2}}{S_{r1}} x Z_1} \qquad \text{(Eq. 36-3)}$$

Where :

p	= Fraction of average voltage
I_c	= Circulating Current
I_{r1}	= Rated Current for Transformer No. 1
I_{r2}	= Rated Current for Transformer No. 2
S_{r1}	= Rated Power for Transformer No. 1
S_{r2}	= Rated Power for Transformer No. 2
Z_1	= Short circuit Impedance of Transformer No.1
Z_2	= Short circuit Impedance of Transformer No. 2

If both power transformers have the same rated power and the same short circuit impedance the expression will be as follows:

$$\frac{I_c}{I_r} = \pm \frac{p}{2Z} \qquad \text{(Eq. 36-4)}$$

Where :

Z = Short circuit impedance of each transformer.

I_r = Rated cirrent for each Transformer

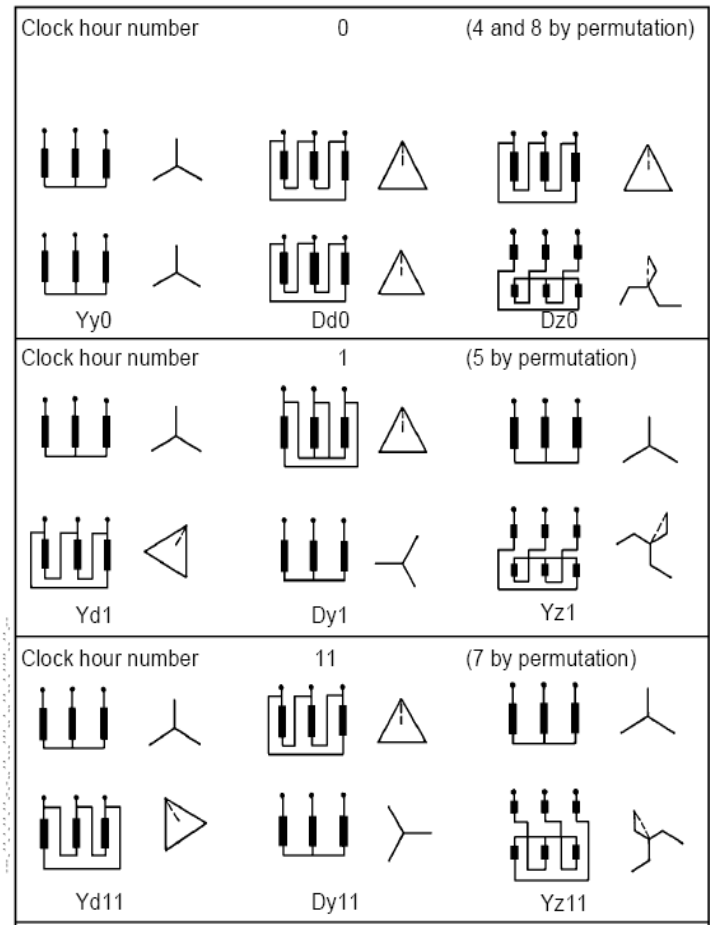

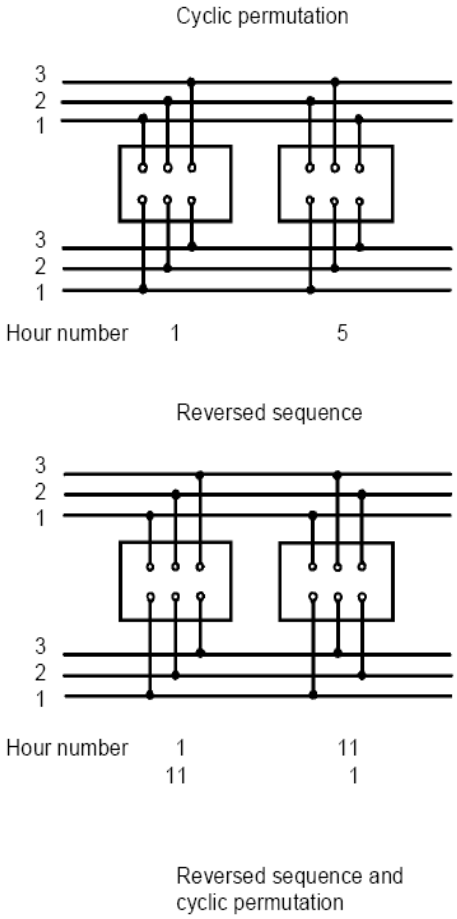

Figure 36-01 : Common three-phase transformer connections, and paralleling possibilities

4.0 BIBLIOGRAPHY

4.1 IEC 60076-8, “Power transformers –Application guide"