الشركة السعودية للكهرباء
Saudi Electricity Company

REVISIONS				
No.	Date	DESCRIPTION	ORIG'D	CERT.	APP'D
1					
2					
3					

TES-P-119.37

Revision No. 0

SHORT CIRCUIT CALCULATION

FOR

SUBSTATION EQUIPMENT

PROPRIETARY INFORMATION

This document contains proprietary information developed by and for exclusive use of Saudi Electricity Company. Your acceptance of the document is an acknowledgement that it must be used for the identified purpose/application and during the period indicated. It cannot be used or copied for any other purposes nor released to others without prior written authorization of Saudi Electricity Company. Saudi Electricity Company will not be responsible for misuse and/or misapplication, and any harm resulting therefrom. Saudi Electricity Company also reserves the right to take any necessary actions to protect its interest against unauthorized use.

ORIGINATED BY	CERTIFIED BY	APPROVED BY
Engr. Abdulrahman G. Al-Ghayhab Division Manager (A), Transmission Substations Specifications	**Engr. Abdullah M. Al-Garni** Department Manager, Transmission Standards & Specifications	**Engr. Saleh N. Al-Sohaibani** Executive Director, Engineering & Projects
Date of Approval: July 06, 2011		

TRANSMISSION ENGINEERING STANDARD

TABLE OF CONTENTS

1.0 SCOPE

2.0 INTRODUCTION

3.0 SHORT CIRCUIT CURRENT FOR TWO WINDING TRANSFORMER

4.0 ASYMMETRICAL SHORT CIRCUIT CURRENT FOR TRANSFORMER

5.0 SHORT CIRCUIT CURRENT FOR THREE WINDING TRANSFORMER

6.0 CIRCUIT BREAKER ASYMMETRICAL CURRENT

7.0 BIBLIOGRAPHY

1.0 SCOPE

This engineering standard highlights the requirements of short circuit current calculations for Transmission substation equipment to be used in Transmission system of Saudi Electricity Company (SEC), Saudi Arabia. This standard is not intended for system short circuit calculations.

2.0 INTRODUCTION

Short circuit calculation is required for sizing of electrical equipment and the methods discussed in this standard are based on International Industry Standards. System short circuit is not discussed and the system fault current shall be as per 01-TMSS-01. Basically, a short-circuit fault in a power system is an abnormal condition that involves one or more phases unintentionally coming in contact with ground or each other. Thus, short-circuit protection is necessary to protect personnel and apparatus from the destructive effects of the resulting excessive current flow, which is caused by the relatively low impedance of the short-circuit fault connection. To provide the required protection, we must determine the extent of short-circuit current at various points of our power distribution system. This determination requires a calculation.

3.0 SHORT CIRCUIT CURRENT FOR TWO WINDING TRANSFORMER

3.1 Short Circuit Current at Principal Tapping

For three phase two winding transformer short circuit current is given by the following formula:

$$I_f = \frac{U}{\sqrt{3} \times Z_t + Z_s} \qquad \text{(Eq. 37-01)}$$

Where;

I_f = Short circuit current in kA

Z_s = Short Circuit Impedance of the system in ohms given by the following formula:

$$Z_s = \frac{U_s^2}{S} \qquad \text{(Eq. 37-02)}$$

Where;

U_s = Rated voltage of the system in kV

S = Short circuit power of the system in MVA

For principal tapping U and Z_t are defined as follows:

U = Rated voltage of the Winding under consideration at principal tap will be specified as U_r in kV

Z_t = Short circuit impedance of the winding in ohms calculated from Percentage impedance by the following formula:

$$Z_t = \frac{z_t \times U_r^2}{100 \times S_r} \qquad \text{(Eq. 37-03)}$$

Where;

z_t = Percentage short circuit impedance of transformer
S_r = Rated powerof transformer in MVA

3.2 Short Circuit Current for Tappings other than the Principal Tapping

Short circuit impedance of the transformer for referred tapping (Z_{tr}) is given by the formula :

$$Z_{tr} = \frac{z_{tr} \times U^2}{100 \times S_r}$$

Where;

z_{tr} = Percentage short circuit impedance for referred tap
U = Tapping voltage in kV

Z_{tr} shall be used in place of Z_t in Equation 37-01 for calculation of Short Circuit Current

4.0 ASYMMETRICAL SHORT CIRCUIT CURRENT FOR TRANSFORMER

The amplitude I_{asymm} of the first peak of asymmetrical short circuit current is given by the following fomula:

$$I_{asymm} = I_f \times (k \times \sqrt{2})$$

Where;

I_{asymm} = Asymmetrical short circuit current (kA_{peak})
I_f = Symmetrical short circuit current to be calculated per formula given in clause 3.1 & 3.2
k = Initial offset and $\sqrt{2}$ accounts for peak to rms value
$(k \times \sqrt{2})$ = Peak factor and it depends on X/R ratio (Eq. 37-04)

$X = (X_t + X_s)$ (Eq. 37-05)

$R = (R_t + R_s)$ (Eq. 37-06)

Where;

X_t = Transformer Reactance in Ohms
X_s = System Reactance in Ohms
R_t = Transformer Resistance in Ohms
R_s = System Resistance in Ohms

Value of peak Factor ($k \times \sqrt{2}$) as a function of X/R ratio is given in the following Table 37-01:

Table 37-01: Peak Factor and X/R Ratio

X/R Ratio	($k \times \sqrt{2}$) Peak Factor
1	1.51
1.5	1.64
2	1.76
3	1.95
4	2.09
5	2.19
6	2.27
8	2.38
10	2.46
14	2.55

Note 1: For other value of X/R between 1 and 14, the peak factor ($k \times \sqrt{2}$) shall be determined by interpolation.
Note 2: If not specified, in case X/R>14, the factor $k \times \sqrt{2}$ is assumed to be equal to
$1.8 \times \sqrt{2} = 2.55$ for 2.5MVA up to 100 MVA Transformer per 53-TMSS-01.
$1.9 \times \sqrt{2} = 2.69$ for Above 100 MVA Transformer per 53-TMSS-02
Note 3: Peak factor in Table 37-01 are based on the following equation:

$$k \times \sqrt{2} = (1 + (e^{-(\phi + \frac{\pi}{2}) R/X}) \sin\phi) \times \sqrt{2} \qquad \text{(Eq. 37-07)}$$

Where;

ϕ = Phase angle equal to arctan X/R in radians
e = Base of Natural logarithm

5.0 SHORT CIRCUIT CURRENT FOR THREE WINDING TRANSFORMER

For calculating the Short Circuit Current in Three winding three phase Transformers, Symmetrical component method shall be used.

The following notations are used to represent different network parameters –

System I - refers to High voltage Winding

System II - refers to Low voltage Winding

System III - refers to Tertiary or Stabilization Winding

The line terminals of each winding are referred as A, B and C.

S_r = Rated power of the main windings or in the system

U_I, U_{II}, U_{III} - Rated voltage across Winding 1 & 11 & tertiary or stabilization winding for Systems I, II & III

I_1, I_{11}, I_{111} - Rated reference current in the Windings

$Z_{r(1)} = \frac{U_1^2}{S_r}$; $Z_{r(11)} = \frac{U_{11}^2}{S_r}$ - Reference impedances in the Windings 1 & 11 (Eq. 37-08)

Z_{s1}^{+} - HV Positive sequence impedance

Z_{s1}^{-} - HV Negative sequence impedence

Z_{s1}^{0} - Zero sequence impedance of the system HV

Z_{s11}^{+} - Positive sequence impedance of Intermediate Voltage system

$Z_{1,11}$ - Impedance between Windings 1 & 11

$Z_{1,111}$ - Impedance between Windings 1 & 111

$Z_{11,111}$ - Impedance between Windings 11 & 111

System impedances are denoted by index 's'

The transformation of the three winding system into a star equivalent network and the calculation of branch impedance expressed in per unit are as follows:

$$Z_1 = \frac{1}{2}(Z_{1,11} + Z_{1,111} - Z_{11,111}) \quad \text{(Eq. 37-09)}$$

$$Z_{11} = \frac{1}{2}(Z_{11,111} + Z_{1,11} - Z_{1,111}) \quad \text{(Eq. 37-10)}$$

$$Z_{111} = \frac{1}{2}(Z_{1,111} + Z_{11,111} - Z_{1,11}) \quad \text{(Eq. 37-11)}$$

$Z_{s1}^{+} = Z_{s1}^{-}$

$Z_{s1}^{0} = k \times Z_{s1}^{+}$ where $1 \le k \le 3$ (effectively earthed)

In the following equations, neutrals of the windings are assumed directly connected to station earth without additional impedance. If additional impedance is present, then this will be additional to zero sequence impedance.

The following types of faults shall be studied and each winding of transformer shall be designed for maximum fault based on calculations.

1. Singe–phase to earth fault on System II (Low voltage)
2. Single-phase to earth fault on System I (HV)
3. Two-phase to earth fault on System II
4. Two phase to earth fault on System I
5. Three-phase short circuit current on Winding or System II
6. Three-phase short circuit current on Winding or System I
7. Three-phase short circuit current on Tertiary Winding III

5.1 Case 1 - Single phase earth to line fault in System II

Various currents in System II are represented as shown below in Figure 37-01

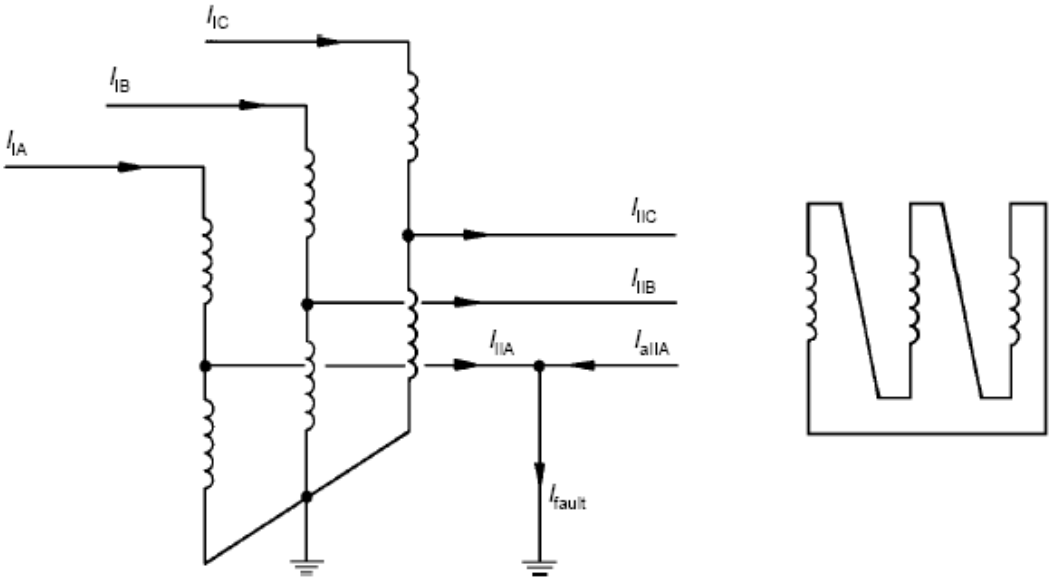

Figure 37-01 : Case 1 : Single Phase to earth fault in System II

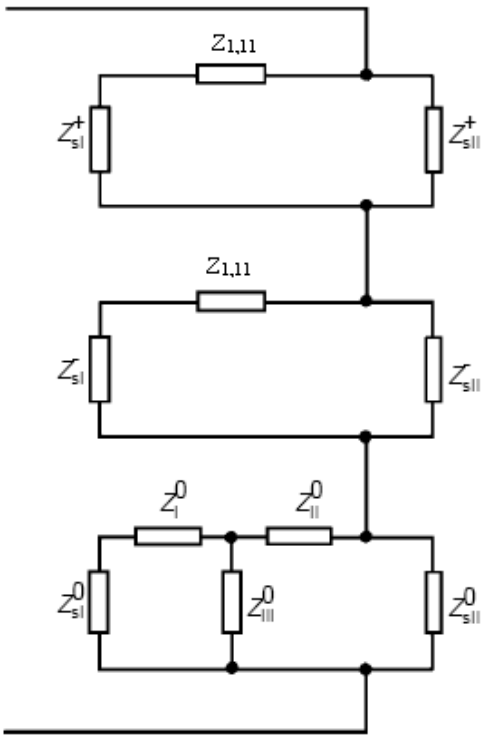

$$Z^+ = \frac{(Z_{I,II} + Z^+_{sI})Z^+_{s\,II}}{Z_{I,II} + Z^+_{sI} + Z^+_{sII}}$$

$$Z^- = \frac{(Z_{I,II} + Z^-_{sI})Z^-_{s\,II}}{Z_{I,II} + Z^-_{sI} + Z^-_{sII}}$$

$$Z^0 = \frac{(Z^0_{II} + Z')Z^0_{s\,II}}{Z^0_{II} + Z' + Z^0_{sII}}$$

$$\text{with} \quad Z' = \frac{(Z^0_I + Z^0_{sI})Z^0_{III}}{Z^0_I + Z^0_{sI} + Z^0_{III}}$$

Figure 37-02 : Positive, Negative and zero sequence for case -1

5.1.1 Fault calculation for Case 1

In this case +ve,-ve and zero sequence currents $I_{11}^{+} = I_{11}^{-} = I_{11}^{0} = I = \frac{1}{\sqrt{3}} \times \frac{U_{11}}{Z}$

Where $Z = Z^{+} + Z^{-} + Z^{0} = 2Z^{+} + Z^{0}$ (Negative and postive sequence impedance are equal)

The Single phase to line earth fault current = $3 \times I_{11}^{0} = \frac{U_2\sqrt{3}}{Z}$ (Eq. 37-12)

Single phase to ground fault current may equal or exceed the three phase/ symmetrical short circuit current under the condition $Z^{0} \leq 2Z^{+} - Z^{-}$

<u>Branch Currents</u>

For phase A of the System II (faulted phase)

$$I_{s11A} = I_{s11}^{+} + I_{s11}^{-} + I_{s11}^{0} = 2I_{s11}^{+} + I_{s11}^{0} = 2\frac{Z^{+}}{Z_{s11}^{+}} \times I + \frac{Z^{0}}{Z_{s11}^{0}} \times I$$

Current in Winding II, Phase A

$$I_{11A} = 2\left(I^{+} - I_{s11}^{+}\right) + I^{0} - I_{s11}^{0} = 3I - I_{s11A} \qquad \text{(Eq. 37-13)}$$

Phase B (unfaulted phase)

$$I_{11B} = I_{s11}^{+} - I_{s11}^{0} \qquad \text{(Eq. 37-14)}$$

<u>Component of currents in Winding I</u>

$$I_{1}^{+} = I_{1}^{-} = \frac{U_{11}}{U_{1}} x I_{11}^{+} = \frac{U_{11}}{U_{1}}(I - I_{s11}^{+}) = \frac{U_{11}}{U_{1}} x I(1 - \frac{Z^{+}}{Z_{s11}^{+}}) \qquad \text{(Eq. 37-15)}$$

$$I_{1}^{0} = \frac{Z_{111}^{0}}{Z_{1}^{0} + Z_{s1}^{0} + Z_{111}^{0}} x \frac{U_{11}}{U_{1}} x I_{11}^{0} \qquad \text{(Eq. 37-16)}$$

Where $I_{11}^{0} = (I - I_{s11}^{0}) = I(1 - \frac{Z^{0}}{Z_{s11}^{0}})$

<u>Current in Winding I</u>

Phase A $I_{1A} = 2I_{1}^{+} + I_{1}^{0}$ (Eq. 37-17)

Phase B $I_{1B} = I_{1}^{0} - I_{1}^{+}$ (Eq. 37-18)

<u>Circulating Current in Delta Winding (Tertiary)</u>

$$I_{111} = \frac{U_{11}}{U_{111} \times \sqrt{3}} \times \frac{Z_{1}^{0} + Z_{s1}^{0}}{Z_{1}^{0} + Z_{s1}^{0} + Z_{111}^{0}} \times I(1 - \frac{Z^{0}}{Z_{s11}^{0}}) \qquad \text{(Eq. 37-19)}$$

5.2 Case 2 : Single phase to earth fault on System I

Various currents in System I are represented as shown below in Figure 37-03

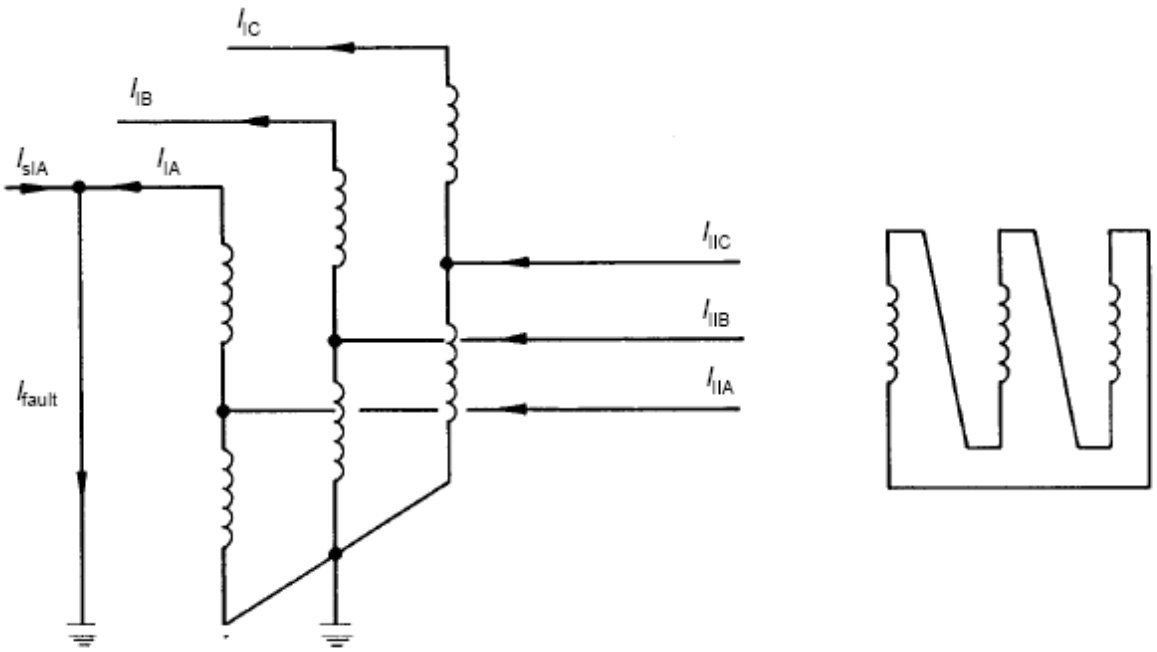

Figure 37-03 : Case 2 : Single Phase to earth fault on System I

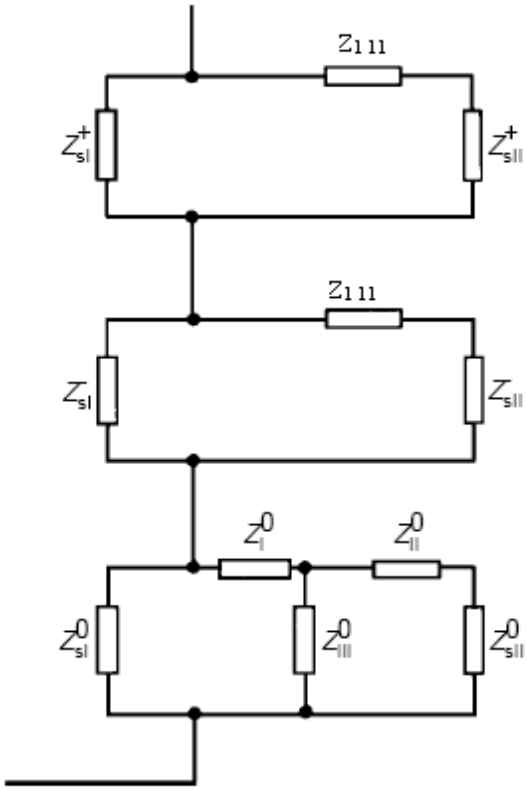

$$Z^+ = \frac{(Z_{I,II} + Z^+_{sII})Z^+_{sI}}{Z_{I,II} + Z^+_{sI} + Z^+_{sII}}$$

$$Z^- = \frac{(Z_{I,II} + Z^-_{sII})Z^-_{sI}}{Z_{I,II} + Z^-_{sI} + Z^-_{sII}}$$

$$Z^0 = \frac{(Z^0_I + Z')Z^0_{sI}}{Z^0_I + Z' + Z^0_{sI}}$$

$$\text{with} \quad Z' = \frac{(Z^0_{II} + Z^0_{sII})Z^0_{III}}{Z^0_{II} + Z^0_{sII} + Z^0_{III}}$$

Figure 37-04 : Positive, Negative and Zero sequence for case 2

Proceeding similar to Case 1, current in System I and System II are given by the following equations:

Winding I

Phase A $I_{1A} = 3I - I_{s1A} = 2\,(I^{+} - I_{s1}^{+}) + I^{0} - I_{s1}^{0}$ (Eq. 37-20)

Phase B (unfaulted phase) $I_{1B} = I_{s1}^{+} - I_{s1}^{0}$ (Eq. 37-21)

Winding II

Phase A $I_{11A} = 2I_{11}^{+} + I_{11}^{0}$ (Eq. 37-22)

Phase B $I_{11B} = I_{11}^{0} - I_{11}^{+}$ (Eq. 37-23)

Circulating Current in Delta Winding (Tertiary)

$$I_{111} = \frac{U_{11}}{U_{111}\times\sqrt{3}} \times \frac{Z_{11}^{0} + Z_{s11}^{0}}{Z_{11}^{0} + Z_{s11}^{0} + Z_{111}^{0}} \times I\left(1 - \frac{Z^{0}}{Z_{s1}^{0}}\right) \quad \text{(Eq. 37-24)}$$

5.3 Case 3 : Two-phase to earth fault on System II

Various currents in System II are represented as shown below in Figure 37-05

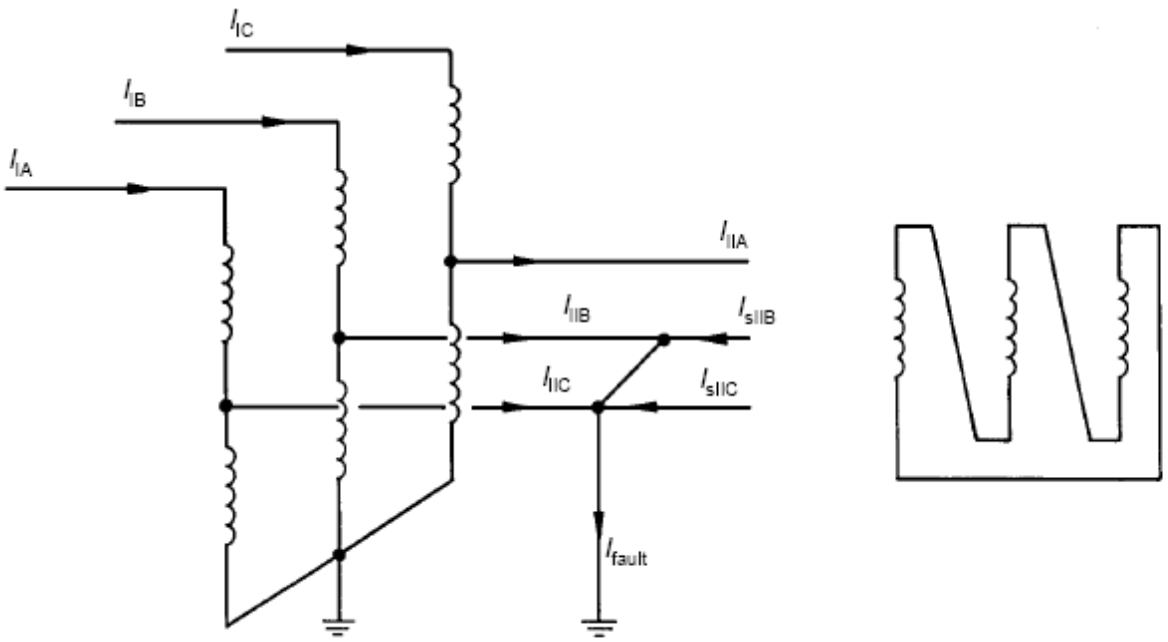

Figure 37-05 : Case 3 : Two Phase to earth fault on System II

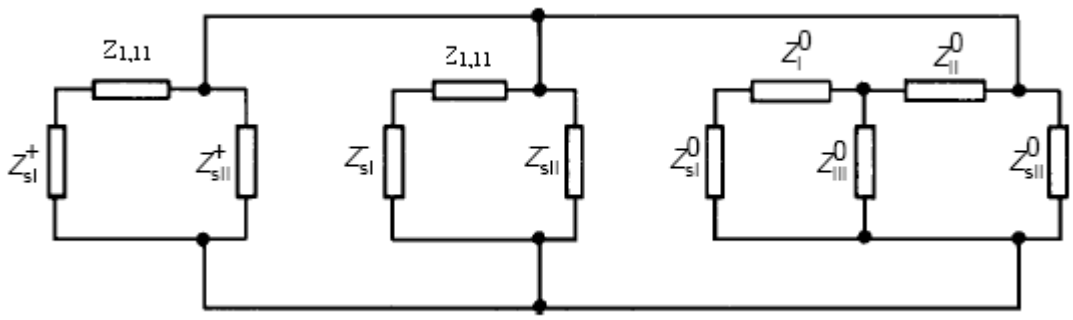

Figure 37-06 : Positive, Negative and Zero sequence for case 3

Current in phases of Winding II

$$I_{11A} = I_{11}^{+} + I_{11}^{-} + I_{11}^{0}$$

$$I_{11B} = \alpha^2 I_{11}^{+} + \alpha I_{11}^{-} + I_{11}^{0}$$

$$I_{11C} = \alpha I_{11}^{+} + \alpha^2 I_{11}^{-} + I_{11}^{0}$$

Current in Winding I

$$I_{1A} = I_{1}^{+} + I_{1}^{-} + I_{1}^{0}$$

$$I_{1B} = \alpha^2 I_{1}^{+} + \alpha I_{1}^{-} + I_{1}^{0}$$

$$I_{1C} = \alpha I_{1}^{+} + \alpha^2 I_{1}^{-} + I_{1}^{0}$$

Circulating current in Delta Winding

$$I_{111} = \frac{U_{11}}{U_{111} \times \sqrt{3}} \times \frac{Z_1^0 + Z_{s1}^0}{Z_1^0 + Z_{s1}^0 + Z_{111}^0} \times I_{11}^0$$

5.4 Case 4 :Two-phase earth fault on System I

Various currents in System I are represented as shown below in Figure 37-07

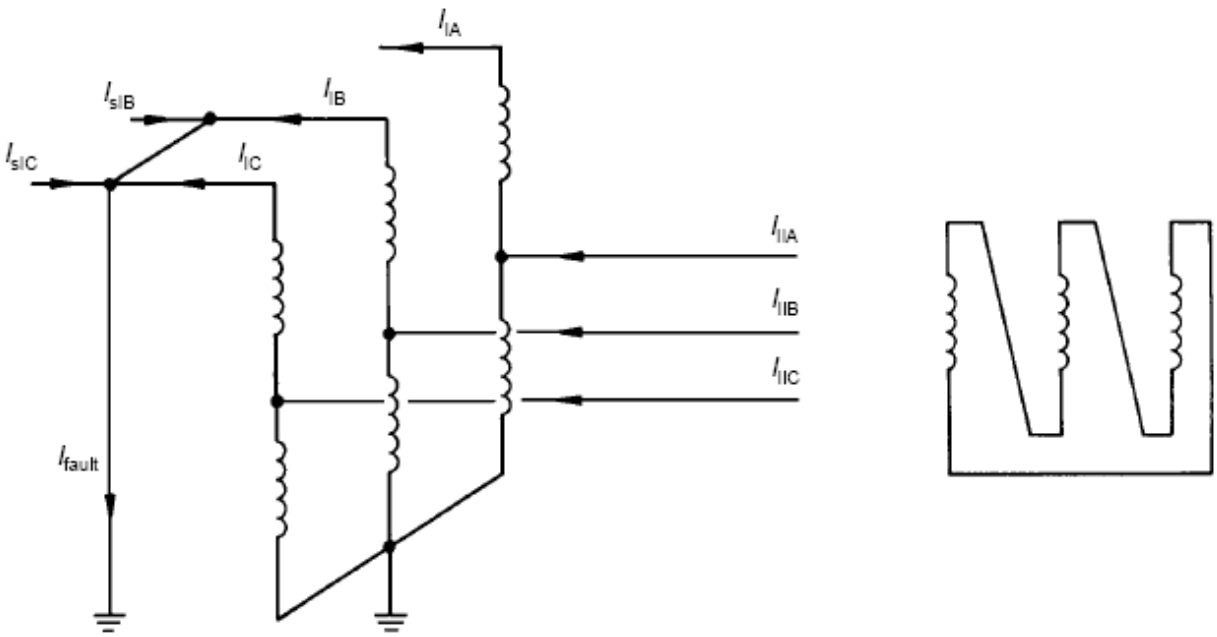

Figure 37.07 Case 4 Two-phase earth fault on System I

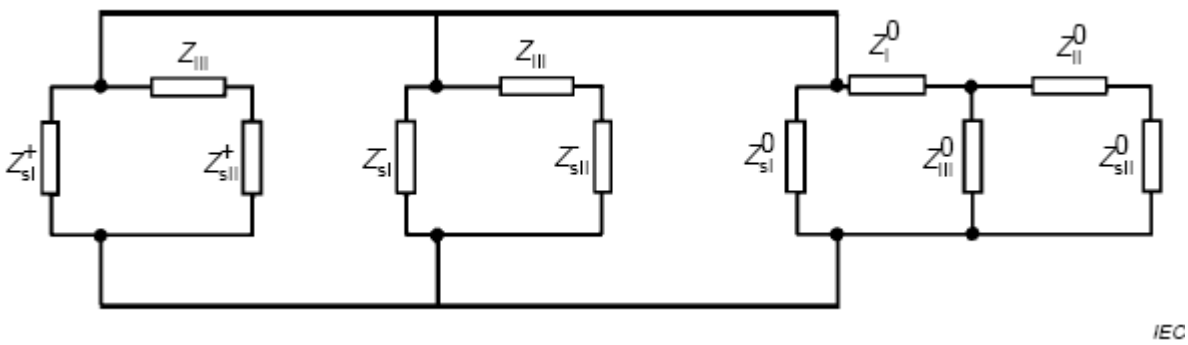

Figure 37-068 : Positive, Negative and Zero sequence for case 4

The final equaltions applicable are

<u>System I</u>

$$I_{1A} = I_1^+ + I_1^- + I_1^0$$

$$I_{1B} = \alpha^2 I_1^+ + \alpha I_1^- + I_1^0$$

$$I_{1C} = \alpha I_1^+ + \alpha^2 I_1^- + I_1^0$$

System II

$$I_{11A} = I_{11}^{+} + I_{11}^{-} + I_{11}^{0}$$

$$I_{11B} = \alpha^2 I_{11}^{+} + \alpha I_{11}^{-} + I_{11}^{0}$$

$$I_{11C} = \alpha I_{11}^{+} + \alpha^2 I_{11}^{-} + I_{11}^{0}$$

Circulating Current in Delta Winding (Tertiary)

$$I_{111} = \frac{U_1}{U_{111} \times \sqrt{3}} \times \frac{Z_{11}^{0} + Z_{s11}^{0}}{Z_{11}^{0} + Z_{s11}^{0} + Z_{111}^{0}} \times I_1^{0}$$

Case 5 : Three phase Short Circuit on Winding or System II

This case contains positive sequence only.

Fault current per phase = $\frac{U_2}{\sqrt{3} \times Z^{+}}$ where $Z^{+} = Z_{s1} + Z_{1,11}$

Current per phase in Winding 1 = $I_1 = I_{11} \times \frac{U_2}{U_1}$

There is no current in Winding III

Case 6 : Three phase short circuit on Winding or System I

This case also contains positive sequence only.

Fault current per phase on System I = $\frac{U_1}{\sqrt{3} \times Z^{+}}$ where $Z^{+} = Z_{s11} + Z_{1,11}$

Current per phase in Winding II = $I_{11} = I_1 \times \frac{U_1}{U_{11}}$

There is no current in Winding III

Case 7 : Three Phase short circuit current on Winding III

This case also contains only positive sequence impedance

$$Z^{+} = Z_{111}^{+} + \frac{\left(Z_{s1}^{+} + Z_{1}^{+}\right)\left(Z_{s11}^{+} + Z_{s11}^{+}\right)}{Z_{s1}^{+} + Z_{1}^{+} + Z_{s11}^{+} + Z_{11}^{+}}$$

Short Circuit Current = Line Current = $I_{111} = \dfrac{U_{111}}{Z^{+} \times \sqrt{3}}$

Short Circuit Current per phase winding = $\dfrac{1}{\sqrt{3}} \times I_{111}$

Fault contribution from Systems I and II

$$I_{1(111)} = I_{111} \times \frac{Z_{s11}^{+} + Z_{11}^{+}}{Z_{s1}^{+} + Z_{1}^{+} + Z_{s11}^{+} + Z_{11}^{+}}$$

$$I_{11(111)} = I_{111} - I_{1(111)}$$

Currents in Windings I and II

$$I_{1} = I_{1(111)} \times \frac{U_{111}}{U_{1}}$$

$$I_{11} = I_{11(111)} \times \frac{U_{111}}{U_{11}}$$

Calculation of positive sequence of two winding and three winding transformers shall be per clause 3.3 of IEC 60909

6.0 CIRCUIT BREAKER ASYMMETRICAL SHORT CIRCUIT CURRENT

Short circuit current for the circuit breaker shall be minimum equivalent to short circuit current specified in latest revision of 01-TMSS-01. Asymmetrical short circuit current for the breaker based on Symmetrical short circuit current is calculated as follows:

DC component of short circuit current is given by (Refer Annex D of IEC 62271-100)

$$I_{dc} = I_{do} \times e^{-\left(\frac{R}{L}\right) \times t} = I_{do} \times e^{-\frac{t}{\tau}} \qquad \text{(Eq. 37-08)}$$

Where;

I_{dc} = DC component of short circuit current in kA

I_{do} = Initial Value of DC Component = $\sqrt{2} \times I_{f}$
(Where I_{f} = Breaker Symmetrical Short Circuit Current in kA)

t = Time interval in seconds from the initiation of short circuit current
= ($T_{OP} + T_{r}$) (Refer IEC 62271-100)
(Where T_{OP} = Minimum Opening time based on type test reports
& T_{r} = Relay Operating Time (0.5 Cycle = 8.3ms for 60Hz)

$$I_{dc} = I_{do} \times e^{\frac{-(T_{OP}+T_r)}{\tau}} \quad \text{(Eq. 37-09)}$$

Where;

τ = DC time constant for breaker in seconds = $\frac{L}{R}$

(Where L = System Inductance
R = System Resistance)

Hence,

$\tau = \frac{\frac{X}{2\pi f}}{R}$ (Where f = System frequency = 60Hz & X= System Inductance in ohms)

$$\tau = \frac{X}{2\pi f R}$$

Substituting these values in to Eq. 37-09

$$I_{dc} = \sqrt{2} \times I_f \times e^{\frac{-(T_{OP}+T_r)}{\tau}}$$

Hence, the final equaltion for I_{dc} is as follows:

$$I_{dc} = \sqrt{2} \times I_f \times e^{-\frac{2\pi f (T_{OP}+T_r)}{\frac{X}{R}}} \quad \text{(Eq. 37-10)}$$

I_{asymm} (in kA) is given by the following equation:

$$I_{asymm} = \sqrt{I_{dc}^2 + I_f^2}$$

(Per Annex I of IEC 62271-100 Circuit Breaker Time constant is 45ms. Based on this Circuit Breaker X/R ratio shall be 17)

7.0 BIBLIOGRAPHY

7.1 IEC 62271-100: High-Voltage Switchgear and Control Gear – Part 100: Alternating-Current Circuit-Breaker

7.2 IEC 60076-5: Power Transformers – Ability to Withstand Short Circuit.

7.3 IEC 60076-8: Power Transformers – Application Guide.