الشركة السعودية للكهرباء
Saudi Electricity Company

REVISIONS				
No.	Date	DESCRIPTION	ORIG'D	CERT.	APP'D
1					
2					
3					

TES-P-119.41

Revision No. 0

NON-LINEAR RESISTOR APPLICATION IN GIS

PROPRIETARY INFORMATION

This document contains proprietary information developed by and for exclusive use of Saudi Electricity Company. Your acceptance of the document is an acknowledgement that it must be used for the identified purpose/application and during the period indicated. It cannot be used or copied for any other purposes nor released to others without prior written authorization of Saudi Electricity Company. Saudi Electricity Company will not be responsible for misuse and/or misapplication, and any harm resulting therefrom. Saudi Electricity Company also reserves the right to take any necessary actions to protect its interest against unauthorized use.

ORIGINATED BY	CERTIFIED BY	APPROVED BY
Engr. Abdulrahman G. Al-Ghayhab Division Manager (A), Transmission Substations Specifications	**Engr. Abdullah M. Al-Garni** Department Manager, Transmission Standards & Specifications	**Engr. Saleh N. Al-Sohaibani** Executive Director, Engineering & Projects
Date of Approval: March 30, 2011		

TRANSMISSION ENGINEERING STANDARD

TABLE OF CONTENTS

1.0 SCOPE

2.0 GENERAL

3.0 EVALUATION OF TRANSIENT ENCLOSURE VOLTAGE RISE (TEVR)

4.0 BIBLIOGRAPHY

1.0 SCOPE

This Engineering Standard specifies the general guidelines for design, selection and installation of Non-linear Resistor (Surge voltage limiter) at the interfaces of GIS and SF6 Air Bushing termination, GIS and Transformer bushing termination and GIS and cable termination intended to be used in the transmission system of the Saudi Electricity Company, Saudi Arabia.

2.0 GENERAL

2.1 Every electrical breakdown in SF6 gas as insulation media of GIS is the source of Very Fast Transient Overvoltages (VFTO) spreading from the point of their appearing into all directions. At the points of discontinuity such as bushings, cable terminals, enclosure compensation plates, voltage and current measuring transformers and similar, the travelling waves that propagate into the outer enclosures and parts of the grounding system causing Transient Enclosure Voltage Rise (TEVR) of the Gas Insultated Switchgear (GIS). Since the frequency range of the transient reaches also several tens of MHz, even very small inductivities of the grounding connections increase the TEVR. Exceeding the "critical" values leads to the audible and visible flashovers.

2.2 SF6 gas-to-air bushing is one of the most important components of GIS as it connects to an overhead transmission line Figure 41-1. VFTO are generated during switching operations of disconnector switch (DS) or circuit breaker (CB) or Break down of the SF6 between the conductor and enclosure (earth fault). VFTO wavefronts propagate inside the substation coaxial bus (bus duct) as a result of skin effect up to a point of discontinuity. In this point the refracted part of the VFTO passes on the external surface of the GIS enclosure causing TEVR. This is a low energy short duration phenomenon, which will sustain for 20-30msec. The point of discontinuity in GIS are; GIS to OHL termination, GIS to transformer or reactor bushing, GIS to cable termination, exposed insulation at enclosure flange joints, windows at disconnector, etc.

2.3 The main and dominant source of the VFTO and TEVR are disconnectors due to its relatively slow contact trip, the whole series of the restrikes occur (tens to several hundreds) and each of them generate VFTO. The voltage conditions inside the switchgear at the restrike on the disconnector, where very fast overvoltages occur can be generally expressed by the following equation.

$$V(t,s) = U_{DS} \cdot K_{(t,s)} + U_0 \qquad \text{Eq.(41.1)}$$

Where:
$V(t,s)$ = transient voltage in the time *t* on the point *s*
U_{DS} = voltage on the disconnector contacts
U_0 = pre-voltage at unloaded side of the disconnector
$K_{(t,s)}$ = the standardized factor for the GIS configuration

2.4 High frequency transients are generally confined to the inside of the screening provided by the GIS enclosure. GIS is a moduler design and discontinuity in the enclosure allows the high frequency effects to be transferred to the exterior of the GIS. These discontinuity influence large potential source of high frequency effect.

2.5 TEVR in GIS is caused by high frequency current, which develop a potential rise because of the relatively high reactance of the conventional earth connection and discontinuity. TEVR is set up by currents fed into the earthing system and the capacitance of the GIS installation.

2.6 The phenomena of TEVR also known as transient ground potentional rise (TGPR) consist of short duration high voltage transient appearing on the external surface of the GIS enclosure.

2.7 To protect against the effect of TEVR, protective devices (non-linear resistor/ surge voltage limiter) shall be installed where the ends of enclosure are not connected to earth. Connecting number of non-linear resistor symmetrically around the flange with short connections are indicated in Figure 41-2 & 41-3.

2.8 When Current transformers are fitted to the outside of enclosures and if insulated flanges fitted at this point, this will establishes another type of discontinuity in the enclosure with the consequental danger of high frequency and high potential differences across the gap. It is necessary to avoid power frequency currents flowing in the enclosures in the opposite direction to the main fault current in the primary conductor. This can be alleviated by means of suitably designed shunts around the current transformer or preferably by non linear resistances connected symmetrically around the circumference of the flange (see Fig: 41-4).

3.0 EVALUATION OF TRANSIENT ENCLOSURE VOLTAGE RISE (TEVR)

3.1 In any case, the voltage collapse produces travelling waves which propagate in all possible directions from the point of breakdown, depending on the number of paths departing from this point. These waves, characterised by very short rise time, produce the so called VFTO and thereby TEVR.

3.2 In earth fault case a step voltage whose amplitude is equal to the line to ground breakdown voltage is initially produced. The maximum amplitude of this step voltage is assumed equal to:

$$U_{100\%} = LIWL_{GIS} \times 1.20 \times 1.12 \qquad \text{Eq.(41.2)}$$

Where; $LIWL_{GIS}$ = the lightning impulse withstand voltage of the GIS
1.2 = the ratio bewteen the breakdown voltage with positive and negative polarity
1.12 = the coefficient of 100% breakdown probability

3.3 GIS/Air bushing transition

3.3.1 The GIS to air bushing interface can be illustrated as in Figure 41-5. The refraction of the appoaching internal wavefront on the overhead line and on the enclosure gives rise to a voltage-to-ground, whose amplitude can be derived by multiplying the amplitude of the intial step generated inside the GIS coaxial bus by the coefficient

$$S_1 = (-)2 \times Z_e / (Z_1 + Z_2 + Z_e) \qquad \text{Eq. (41.3)}$$

Where; Z_1 = surge impedance of the coaxial bus
Z_2 = surge Impedance of the line
Z_e = surge impedance of the enclosure (to the ground)

3.3.2 Surge impedance of the coaxial bus of single phase enclosure can be calculated using the formula:

$$Z_1 = 60\ln (R/r) \quad \text{Ohms} \qquad \text{Eq. (41.4)}$$

Where; r = radius of internal conductor
R = innermost radius of the enclosure

3.3.3 Surge impedance of the three phase coaxial bus can be calculated using following formula:
Capacitance

$$C = (4\times\pi\times\varepsilon_r\times\varepsilon_0)/\{\ln 4[(a^2\times(\tfrac{3}{4}D^2-a^2)^3/d^2(27/64D^6-a^6)]\}\text{F/m} \qquad \text{Eq. (41.5)}$$

$$\text{Inductance } L = (\mu_0/\pi)\{\ln 4[(a^2\times(\tfrac{3}{4}D^2-a^2)^3/d^2(27/64D^6-a^6)]\}\text{H/m} \qquad \text{Eq. (41.6)}$$

Where; ε_r = Relative gas permitivity =1
ε_0 = Permitivity of gas = 8.854×10^{-12}
μ_0 = Permiability of free space = $4 \times\pi \times 10^{-7}$ H/m
d = Diameter of the busbar conductor
D = Inner diameter of the enclosure
a = Distance between centers of neighbouring conductors

Thereby surge impedance of three phase enclosure $Z_1 = \sqrt{(L/C)}$

$$= 1/(4 \times\pi) \times \{\ln 4[(a^2 (\tfrac{3}{4} D^2- a^2)^3 / d^2 (27/64 D^6-a^6)]\} \times \sqrt{(\mu_0/ \varepsilon_r \times \varepsilon_0)}$$

Substituting the values of π , μ_0, ε_r, and ε_0

$$Z_1 = 29.98 \times \{\ln 4[(a^2 (\tfrac{3}{4} D^2- a^2)^3 / d^2 (27/64 D^6-a^6)]\} \qquad \text{Eq. (41.7)}$$

3.3.4 Surge impedance of the enclosure (cylinder plane) can be calculated using the formula:

$$Z_e = 60 \times \ln \{[h + \sqrt{(h^2 - R^2)}] /R\} \qquad \text{Eq. (41.8)}$$

Where; R = innermost radius of the enclosure
h = height of the centre of the conductor from the ground plane

3.3.5 Surge impedance of transmission line can be calculated using the formula:

$$Z_2 = \sqrt{(R + j\omega L) / (G + j\omega C)} \qquad \text{Eq. (41.9)}$$

Where; R = resistance per unit length
L = inductance per unit length
G = conductance of the dielectric per unit length
C = Capacitance per unit length
j = imaginary unit
ω = angular frequency

3.3.6 When the wave propagates outside the enclosure, ground straps and cross bounding betweeen the enclosures of the phases are involved. Ground straps and cross boundings shall be considered as transmission line.

3.3.7 Amplitude of the step propagating beyond connections is evaluated by multiplying the amplitude of the incident step by transmission coefficient of the junction (Fig 41-6):

$$S_2 = (-)\ 2 \times Z_g / (2 \times Z_g + Z_e) \qquad \text{Eq. (41.10)}$$

Where; Z_g = Surge impedance of the ground connection
Z_e = Surge impedanace of the enclosure

3.3.8 The portion of the wave propagating down the ground strap is reflected at the point of the ground connection and return back with opposite sign to the enclosure where it reduces the original wave (Fig 41-7). If the length of ground lead is such that twice its transient time is less than the rise time of the incident step, the reduction happen before the maximum amplitude is reached, i.e. on the front of the step.

3.3.9 For accurate method, Electromagnetic Transient Program (EMTP) considering all internal components of the whole substation (disconnectors, circuit breakers, bushing, etc) and external network (overhead lines, cables, gaps, non linear resistors, etc) shall be carried out.

3.3.10 Internal wave front can be calculted by multiplying Eq (41.2) by 'S_1'.

Therefore, internal wave front $U_i = (LIWL_{GIS} \times 1.20 \times 1.12) \times S_1$ Eq. (41.11)

3.3.11 The amplitude of step propagation beyond connection can be calculated multiplying Eq (41.2) by 'S_2'.

Therefore, amplitude of step propagation beyond connection

$$U_a = (LIWL_{GIS} \times 1.20 \times 1.12) \times S_2 \qquad \text{Eq. (41.12)}$$

3.3.12 The three phases of three single phase enslolures are very close and connected in parellel the total enclosure surge impedance can be considered as the parallel of surge impedance of the three enclsoure. And therefore for

three phase calculation the values of S_1 = 0.18 & S_2 = 0.16 shall be considered.

3.3.13 Multiple ground straps further reduces the surge impedance Z_g and thereby S_2 is reduced.

3.4 GIS/Cable transition

3.4.1 Sheath of cables and GIS enclosure are normally isolated by an insulation sleeve and are connected to ground separately. The GIS and cable interface is schematized as Fig 41-8, the value of the transmission coefficient relating to the amplitude of the wave between enclosure and ground is given by:

$$S = (-)2 \times Z_e / (Z_1 + Z_2 + Z_e + Z_c) \qquad \text{Eq. (41.13)}$$

Where; Z_e = Surge impedance of the enclosure
Z_1 = Surge impedance of the coaxial bus
Z_2 = Surge impedance of the cable conductor
Z_c = Surge impedance of the cable sheath

3.4.2 Normally between cable sheath and GIS enclosure some equipment such as non linear resistors, capacitor or gaps are provided to reduce the VFTO on the enclosures. The voltage drop of the capacitor, non linear resistor or the gap voltage collapse plus the voltage drop on the connecting lead is the voltage V_R applied to the series circuit formed by Z_c and Z_e, see Figure 41-9.

3.5 Selection of non-linear resistor (Surge voltage limiter)

3.5.1 The rated voltage of the non-linear resistor shall be coordinated with standing voltages induced by rated and short circuit current. The device shall have adequate energy absorption and high frequency response.

3.5.2 The non-linear resistor shall be arranged to give a low inductance connection by minimizing the length of the connecting leads and connecting a number of devices in parallel.

3.5.3 The standing voltage is directly proportional to the conductor current and distance from the earth and increases with the enclosure spacing.

3.5.4 The limiter shall be able to withstand the 60Hz overvoltges resulting from system faults.

3.5.5 The limiter shall be able to absorb, without damage, the energy dissipated due to switching, including switching associated with a fault.

3.5.6 Non-linear resistor/ surge voltage limiter shall comply with IEC 60099. Non-linear resistor/ surge voltage limiter shall comply with IEC 60099-4. ZnO element per 60099-4 only acceptable.

3.5.7 Non-linear resistor (surge voltage limiter) shall have sufficient energy absorption capability.

3.5.8 The discharge current of Non-linear resistor (surge votlage limiter) can be calculated as follows:

$$I_{Slv} = (2U_a – e) / Z_1 \text{ (kA)} \qquad \text{Eq. (41.14)}$$

Where; I_{Slv} = Discharge current of SVL (Amps)
U_a = Amplitude of step propagation (kV)
e = Discharge Inception Voltage of SVL (Continuous operating voltage) (kV)
Z_1 = Surge impedance of the coaxial bus (Ohm)

3.5.9 Energy absorbtion capability of Non-linear resistor (surge voltage limiter) can be calculated as follows:

$$W = U_{res} \times (U_L – U_{res}) \times 1/Z \times T \times 10^{-3} \text{ (kJ)} \qquad \text{Eq. (41.15)}$$

Where ; W = Energy absorption capability
U_{res} = Residual (discharge) voltage (lowest value of the switching impulse residual voltage measured-refer Table J.1/J.2 of IEC 60099-4)
U_L = Charging voltage (refer table-5 of IEC 60099-4)
Z = Surge impedance of the line (refer Table-5 of IEC 60099-4)
T = Virtual duration of peak T (refer Table-5 of IEC 60099-4)

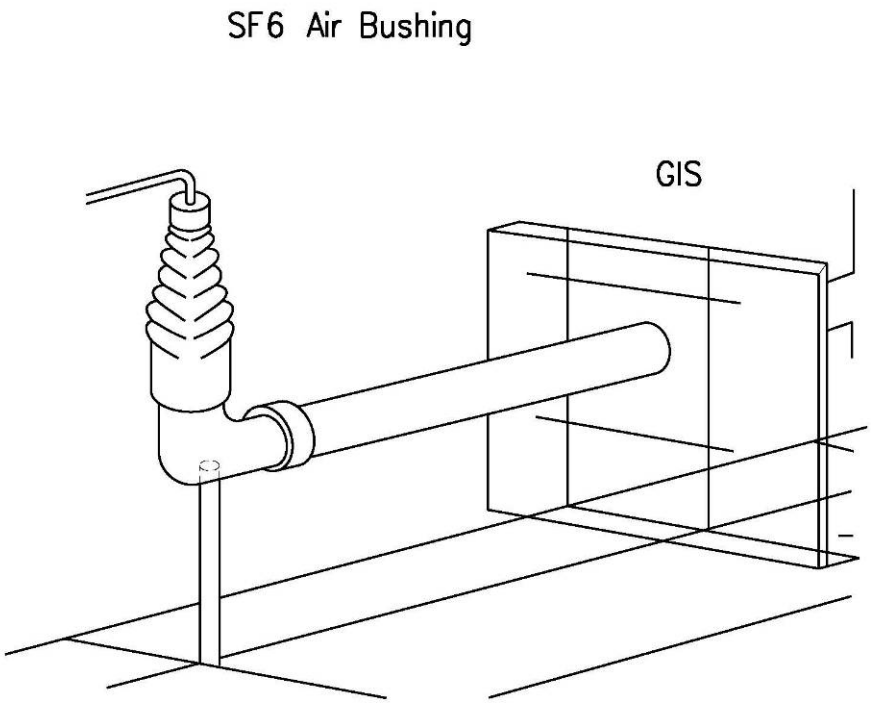

Figure 41-1: OHL termination

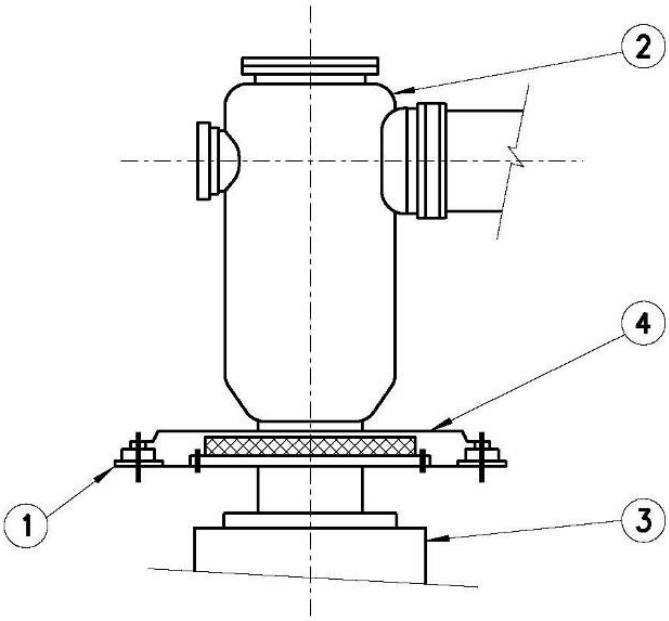

1. Variable resistance 2. Metal enclosure of GIS
3. Transformer tank 4. Insulator

Figure 41- 2: Shunting of the insulation between the metal enclosure of GIS and a transformer tank by variable resistances

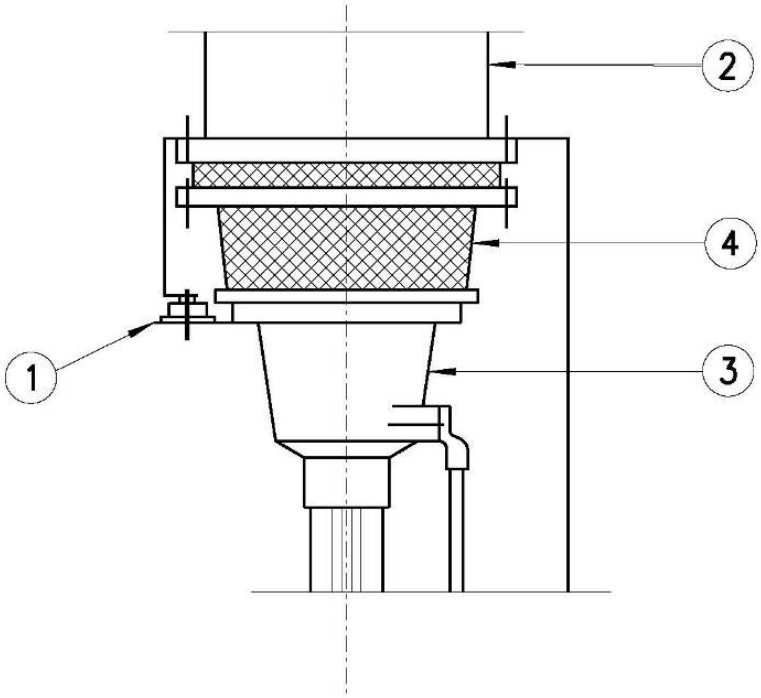

1. Variable resistance
2. Metal enclosure of GIS
3. Metal part of cable termination
4. Insulator

Figure 41- 3: Shunting of the insultion between the metal enclosure of GIS and the metal part of the cable by means of variable resistances

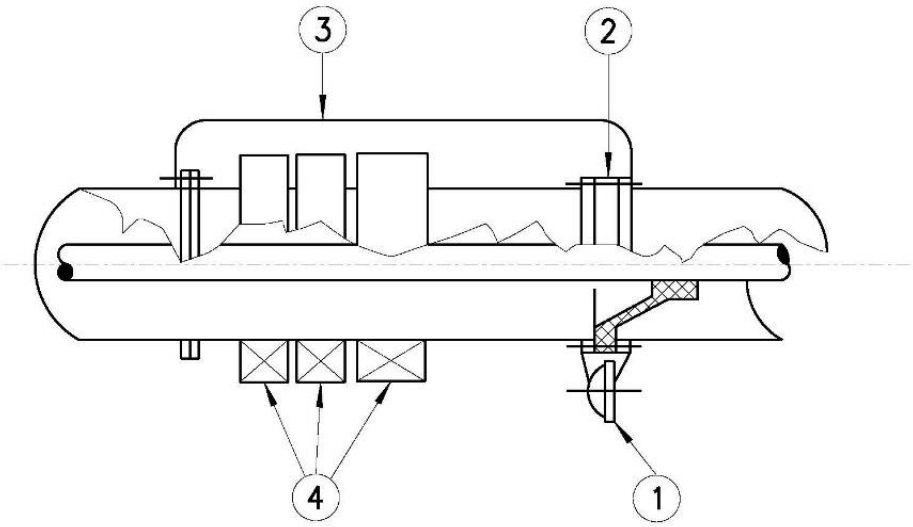

1. Variable resistance 2. Insulator
3. Shunt 4. Current transformer

Figure 41- 4: Shunting of current transformer by means of variable resistances symmetrically around the circumferences of the flange

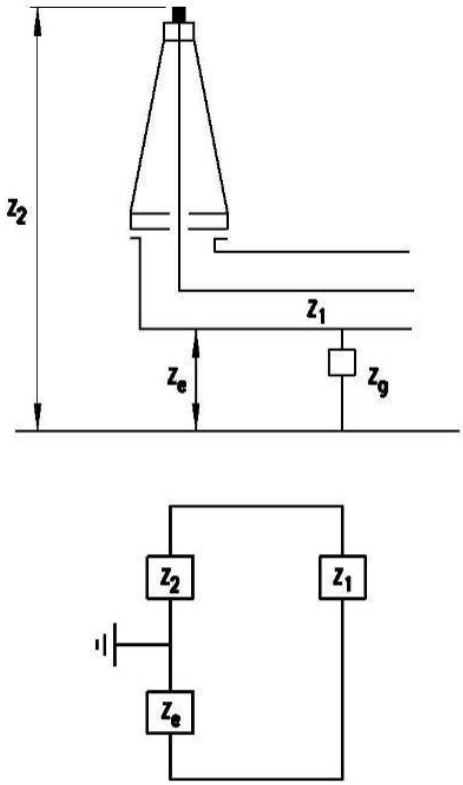

Figure 41-5: Over voltages on enclosures associated with an overhead line termination

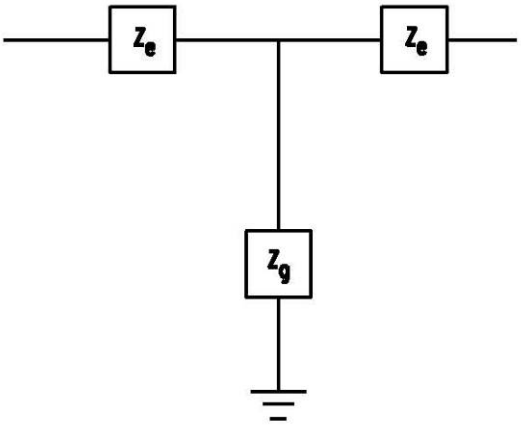

Figure 41- 6: Assessment of Surge propagating beyond GIS

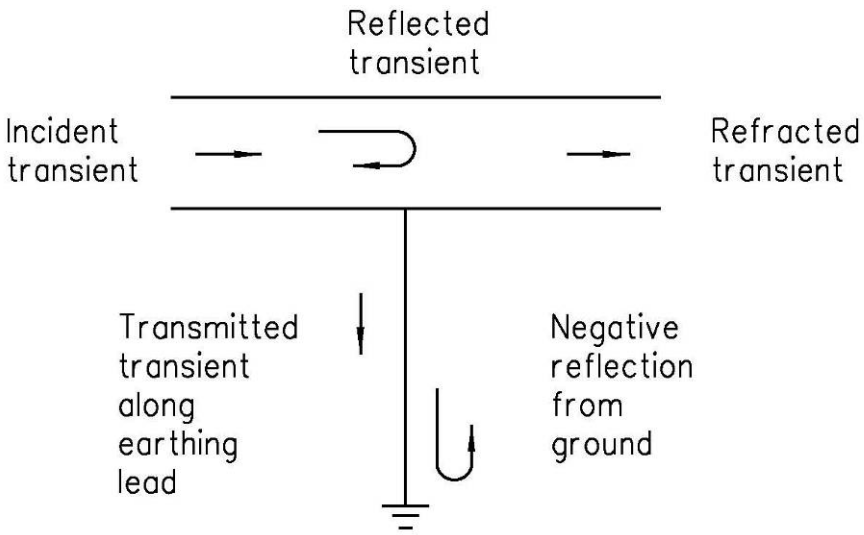

Figure 41-7: Propagation of surge down ground connections

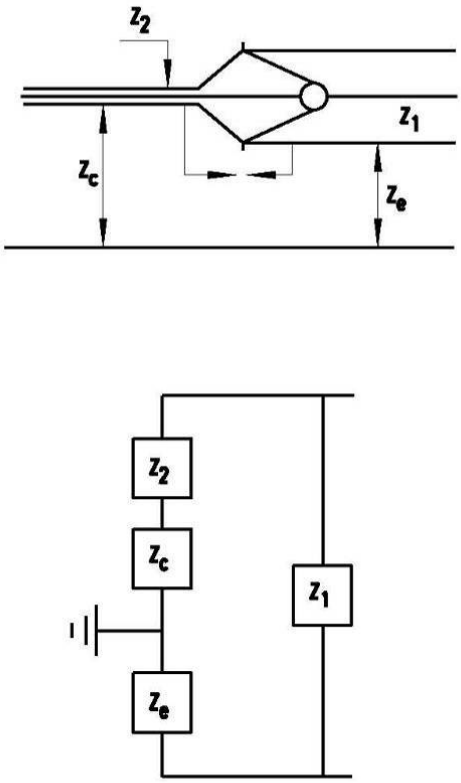

Figure 41- 8: Overvoltages on enclosures associated with a cable termination

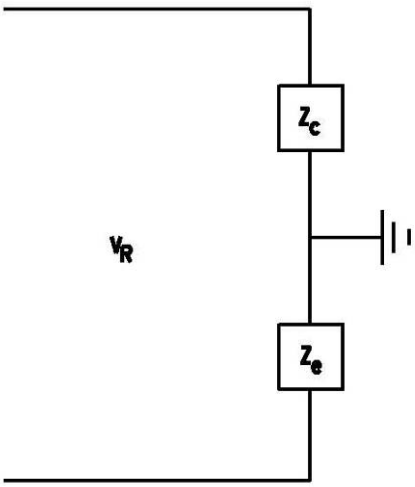

Figure 41- 9: Effect of Surge arrester at point of GIS/Cable sheath interface

4.0 BIBLIOGRAPHY

4.1 Electra no 151 (Dec. 1993), “Earthing of GIS – An Application Guide”.

4.2 IEEE C37.122 (IEEE Guide for Gas-Insulated Substations)

4.3 IEC 60099-4 (Surge arresters-Metal-oxide surge arresters without gaps for a.c. systems)