UNIT-I: Microprocessor Architecture

Features of 8085 Microprocessor:-

1. It is an 8-bit microprocessor i.e. it can accept, process, or provide 8-bit data simultaneously.
2. It is enclosed with 40 pins DIP (Dual in line package).
3. It operates on a single +5V power supply connected at V_{cc}; power supply ground is connected to V_{ss}.
4. It operates on clock cycle with 50% duty cycle.
5. It has on chip clock generator. This internal clock generator requires tuned circuit like LC, RC or crystal. The internal clock generator divides oscillator frequency by 2 and generates clock signal, which can be used for synchronizing external devices.
6. It can operate with a 3 MHz clock frequency. The 8085A-2 version can operate at the maximum frequency of 5 MHz.
7. It has 16 address lines, hence it can access (2^{16}) 64 Kbytes of memory.
8. It provides 8 bit I/O addresses to access (2^8) 256 I/O ports.
9. In 8085, the lower 8-bit address bus (A_0 -A_7) and data bus (D_0 -D_7) are Multiplexed to reduce number of external pins. But due to this, external hardware (latch) is required to separate address lines and data lines.
10. It supports 74 instructions with the following addressing modes:

    a) Immediate b) Register c) Direct d) Indirect e) Implied
11. The Arithmetic Logic Unit (ALU) of 8085 performs:

    8 bit binary addition with or without carry, 16 bit binary addition, 2 digit BCD addition.

    8-bit binary subtraction with or without borrow, 8-bit logical AND, OR, EX-OR, complement (NOT), and bit shift operations

12. It has 8-bit accumulator, flag register, instruction register, six 8-bit general purpose registers (B, C, D, E, H and L) and two 16-bit registers. (SP and PC). Getting the operand from the general purpose registers is faster than from memory. Hence skilled programmers always prefer general purpose registers to store program variables than memory.
13. It provides five hardware interrupts: TRAP, RST 7.5, RST 6.5, RST 5.5 and INTR.
14. It has serial I/O control which allows serial communication.
15. It provides control signals (IO/M, RD, WR) to control the bus cycles, and hence external bus controller is not required.
16. The external hardware (another microprocessor or equivalent master) can detect which machine cycle microprocessor is executing using status signals (IO/M, S_0, and S1) This feature is very useful when more than one processors are using common system resources (memory and I/O devices).
17. The 8085 has an ability to share system bus with Direct Memory Access This feature allows to transfer large amount of data from I/O device to memory or from memory to I/O device with high speeds.
18. . It can be used to implement three chip microcomputer with supporting I/O devices like IC 8155 and IC 8355.

Block Diagram of 8085 microprocessor:

8085 is pronounced as "**eighty-eighty-five**" microprocessor. It is an 8-bit microprocessor designed by Intel in 1977 using NMOS technology. The figure below shows the internal architecture of 8085 microprocessor.

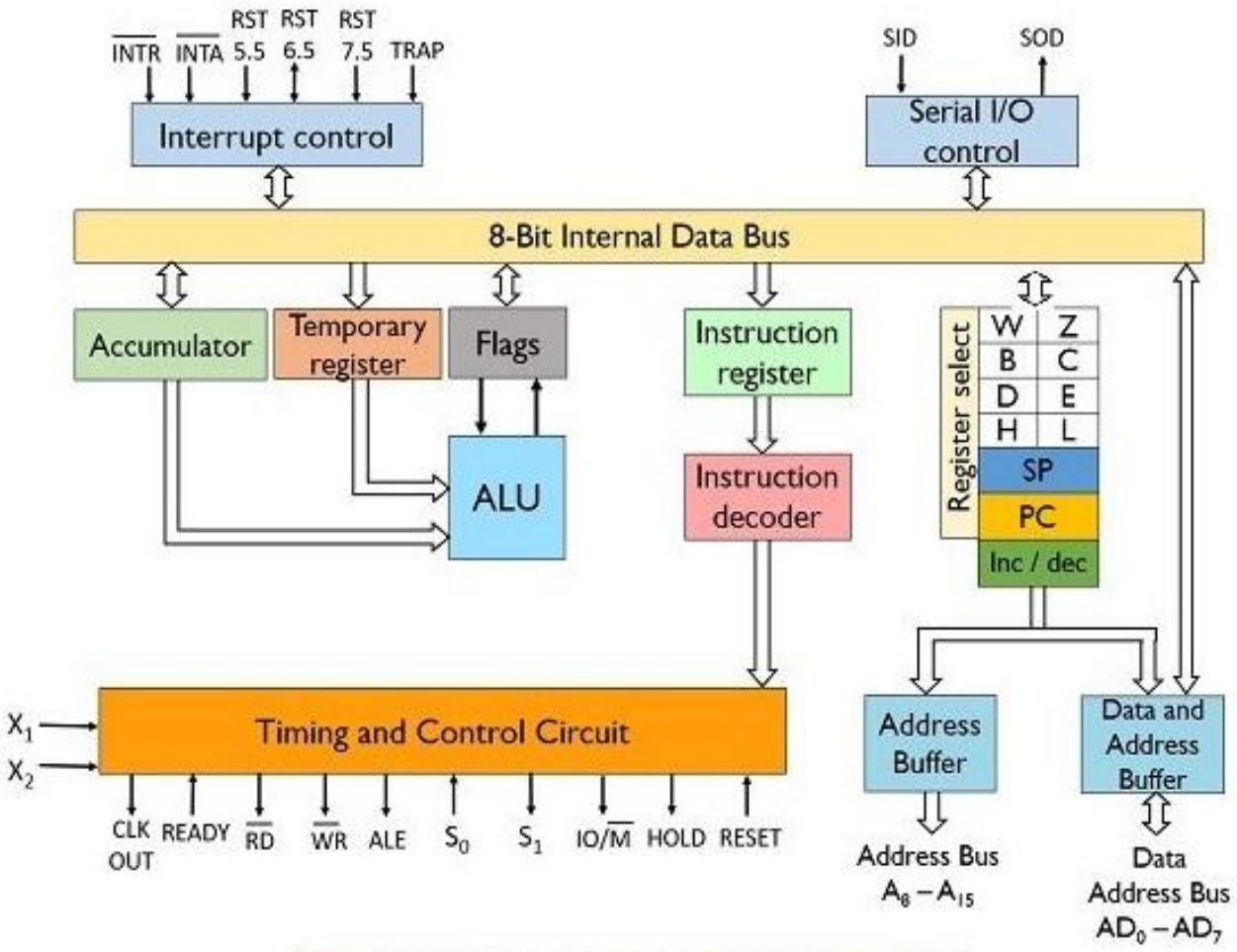

Architecture of 8085 Microprocessor

It has the following configuration −

- 8-bit data bus
- 16-bit address bus, which can address upto 64KB
- A 16-bit program counter
- A 16-bit stack pointer
- Six 8-bit registers arranged in pairs: BC, DE, HL
- Requires +5V supply to operate at 3.2 MHZ single phase clock

8085 consists of the following functional units −

1. Arithmetic and logic unit:

The Arithmetic Logic Unit (ALU) of 8085 performs:

- 8 bit binary addition with or without carry
- 16 bit binary addition, 2 digit BCD addition.
- 8-bit binary subtraction with or without borrow.
- 8-bit logical AND, OR, EX-OR, complement (NOT), and bit shift operations

Following registers are also the part of ALU.

Accumulator

It is an 8-bit register used to perform arithmetic, logical, I/O & LOAD/STORE operations. It is connected to internal data bus & ALU.

Temporary register

It is an 8-bit register, which holds the temporary data of arithmetic and logical operations.

Flag register

It is an 8-bit register having five 1-bit flip-flops, which holds either 0(RESET) or 1(SET) depending upon the result stored in the accumulator. The flag bits are

These are the set of 5 flip-flops −

- Sign (S): **Set** if result of arithmetic operations is negative otherwise **reset**
- Zero (Z): **Set** if result of arithmetic operations is Zero otherwise **reset**
- Auxiliary Carry (AC): **Set** if addition produces carry from D3 to D4 bit position. Otherwise **Reset**
- Parity (P): **Set** if result of arithmetic operations has EVEN parity. **Reset** if Parity is ODD
- Carry (C): **Set** if the result of addition produces carry otherwise **Reset**

Its bit position is shown in the following table −

D7	D6	D5	D4	D3	D2	D1	D0
S	Z		AC		P		CY

2. General & special purpose registers:

There are 6 general purpose registers in 8085 processor, i.e. B, C, D, E, H & L. Each register can hold 8-bit data.

These registers can work in pair to hold 16-bit data and their pairing combination is like B-C, D-E & H-L.

Program counter

It is a 16-bit register used to store the memory address location of the next instruction to be executed. Microprocessor increments the program whenever an instruction is being executed, so that the program counter points to the memory address of the next instruction that is going to be executed.

Stack pointer

It is also a 16-bit register which points to the address of stack memory. It is always incremented/decremented by 2 during push & pop operations.

3. Instruction register and decoder:

It is an 8-bit register. When an instruction is fetched from memory then it is stored in the Instruction register. Instruction decoder decodes the information present in the Instruction register.

4. Timing and control unit:

It provides timing and control signal to the internal circuits & external peripherals connected to microprocessor to perform various internal & external operations. Following are the timing and control signals, which control external and internal circuits −

- Control Signals: READY, RD’, WR’, ALE
- Status Signals: S0, S1, IO/M’

- DMA Signals: HOLD, HLDA
- RESET Signals: RESET IN, RESET OUT

5. Interrupt control:

As the name suggests it controls the interrupts during a process. When a microprocessor is executing a main program and whenever an interrupt occurs, the microprocessor shifts the control from the main program to process the incoming request. After the request is completed, the control goes back to the main program.

There are 5 interrupt signals in 8085 microprocessor: INTR, RST 7.5, RST 6.5, RST 5.5, and TRAP.

6. Serial Input/output control:

It controls the serial data communication by using these two instructions: SID (Serial input data) and SOD (Serial output data).

7. Address buffer and address-data buffer:

The content stored in the stack pointer and program counter is loaded into the address buffer and address-data buffer to communicate with the CPU. The memory and I/O chips are connected to these buses; the CPU can exchange the desired data with the memory and I/O chips.

Address bus and data bus:

Data bus carries the data to be stored. It is bidirectional, whereas address bus carries the location to where it should be stored and it is unidirectional. It is used to transfer the data & Address to memory & I/O devices.

Pin Configuration of 8085 Microprocessor:

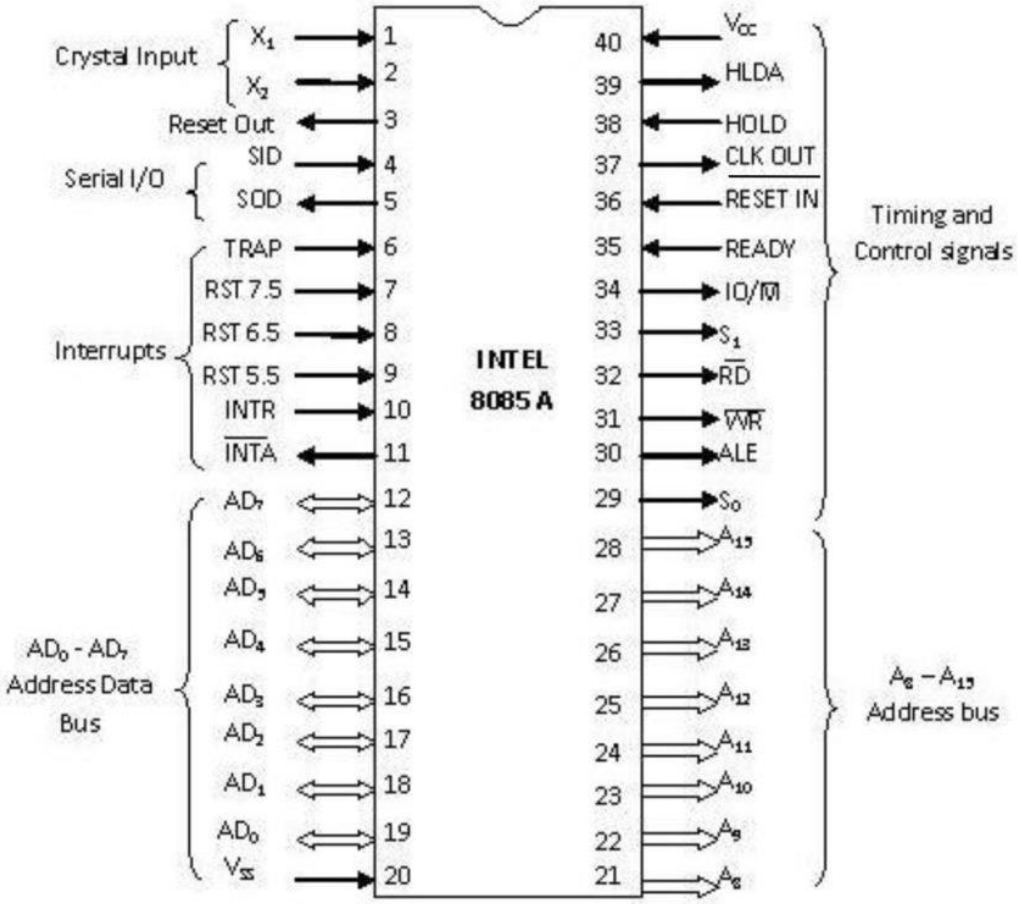

The pins of a 8085 microprocessor can be classified into seven groups −

1. Address bus:

A15-A8, it carries the most significant 8-bits of memory/IO address. It is called High order Address bus.

2. Address/Data bus:

The signal lines AD7-AD0 are bidirectional they serve dual purpose. They are used as low order address bus & data bus.In executing an instruction, during the earlier part of the cycle , these lines are used as low order address bus (A7-A0), during later part of the cycle these lines are used as data bus.(This is known as multiplexing the bus).However, the low order address bus canbe separated from these signals by external latch IC.

3. Control and status signals:

These signals are used to identify the nature of operation. There are 3 control signal and 3 status signals.

Three control signals are RD, WR & ALE.

- **RD'** − This signal indicates that the selected IO or memory device is to be read and is ready for accepting data available on the data bus.
- **WR'** − This signal indicates that the data on the data bus is to be written into a selected memory or IO location.
- **ALE** − It is a positive going pulse generated when a new operation is started by the microprocessor. When the pulse goes high, it indicates address. When the pulse goes down it indicates data.

Three status signals are IO/M, S0 & S1.

IO/M'

This signal is used to differentiate between IO and Memory operations, i.e. when it is high indicates IO operation and when it is low then it indicates memory operation.

S1 & S0

These signals are used to identify the type of current operation.

4. Power supply:

There are 2 power supply signals − VCC & VSS. VCC indicates +5v power supply and VSS indicates ground signal.

5. Clock signals:

There are 3 clock signals, i.e. X1, X2, CLK OUT.

- **X1, X2** − A crystal (RC, LC N/W) is connected at these two pins and is used to set frequency of the internal clock generator. This frequency is internally divided by 2.
- **CLK OUT** − This signal is used as the system clock for devices connected with the microprocessor.

6. Interrupts & externally initiated signals:

Interrupts are the signals generated by external devices to request the microprocessor to perform a task. There are 5 interrupt signals, i.e. TRAP, RST 7.5, RST 6.5, RST 5.5, and INTR. We will discuss interrupts in detail in interrupts section.

- **INTA** − It is an interrupt acknowledgment signal.
- **RESET IN'** − This signal is used to reset the microprocessor by setting the program counter to zero.
- **RESET OUT** − This signal is used to reset all the connected devices when the microprocessor is reset.
- **READY** − This signal indicates that the device is ready to send or receive data. If READY is low, then the CPU has to wait for READY to go high.
- **HOLD** − This signal indicates that another master is requesting the use of the address and data buses.
- **HLDA (HOLD Acknowledge)** − It indicates that the CPU has received the HOLD request and it will relinquish the bus in the next clock cycle. HLDA is set to low after the HOLD signal is removed.

7. Serial I/O signals:

There are 2 serial signals, i.e. SID and SOD and these signals are used for serial communication.

- **SOD** (Serial output data line) − The output SOD is set/reset as specified by the SIM instruction.
- **SID** (Serial input data line) − The data on this line is loaded into accumulator whenever a RIM instruction is executed.

Machine Language:

The machine language consists of strings of binary numbers (that is 0's and 1's), which means the code is written in binary language, and this is the only language that is recognized by the Microcomputer system and computer system.

Machine code is the fundamental language of any computer system. Machine language is also named as a ***low-level language***.

What is OPCODE?

Opcode is the first part of an instruction that tells the microprocessor what function to perform and is also called **Operation code.** Opcodes are the numeric codes that hold the instructions given to the microprocessor.

These are the instructions that describe the CPU what operations are to be performed. The microprocessor 8085 has an unique **operation code** or **opcode** for each and every instruction.

What is OPERAND?

Operand is another second part of **instruction**, which indicates the microprocessor where to find the data or instructions or where to store the data or **instructions**.

The number of **operands** varies amongst various instructions of microprocessor. Each **instruction** indicates the Control Unit of microprocessor what to perform and how to perform it.

Instruction Formats:

The Instruction Format of 8085 instruction set consists of one, two and three byte instructions. In one byte instructions the first byte indicates both opcode & operand in the instruction.. In two-byte instructions the first byte is opcode & second byte is usually data. In three byte instructions the first byte is opcode & last two bytes represent 16 bit address or 16-bit data.

1. One-byte instructions –

In 1-byte instruction, the opcode and the operand of an instruction are represented in one byte.

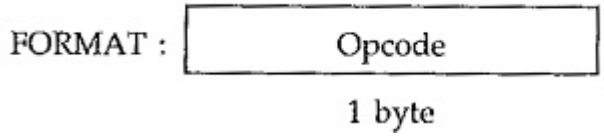

Example-1: Task- Copy the contents of accumulator in register B.

Mnemonic- MOV B, A

Opcode- MOV

Operand- B, A

Hex Code- 47H

Binary code- 0100 0111

Example-2: Task- Add the contents of accumulator to the contents of register B.

Mnemonic- ADD B

Opcode- ADD

Operand- B

Hex Code- 80H

Binary code- 1000 0000

2. Two-byte instructions –

Two-byte instruction is the type of instruction in which the first 8 bits indicates the opcode and the next 8 bits indicates the operand.

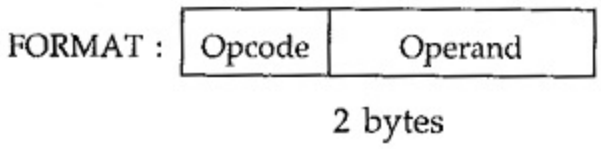

Example-1: Task- Load the hexadecimal data 32H in the accumulator.

Mnemonic- MVI A, 32H

Opcode- MVI

Operand- A, 32H

Hex Code- 3E , 32

Binary code- 0011 1110 , 0011 0010

Example-2: Task- Load the hexadecimal data F2H in the register B.

Mnemonic- MVI B, F2H

Opcode- MVI

Operand- B, F2H

Hex Code- 06, F2

Binary code- 0000 0110 , 1111 0010

Note – This type of instructions need two bytes to store the binary codes. The mnemonic is always followed by 8-bit (byte) data.

3. Three-byte instructions –

Three-byte instruction is the type of instruction in which the first 8 bits indicates the opcode and the next two bytes specify the 16-bit address. The low-order address is represented in second byte and the high-order address is represented in the third byte.

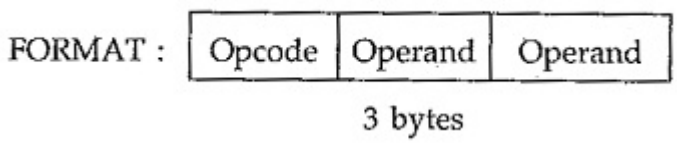

Example-1: Task- Load contents of memory 2050H in the accumulator.

Mnemonic- LDA 2050H

Opcode- LDA

Operand- 2050H

Hex Code- 3A, 50, 20

Binary code- 0011 1010, 0101 0000, 0010 0000

Example-2: Task- Transfer the program sequence to the memory location 2050H.

Mnemonic- JMP 2085H

Opcode- JMP

Operand- 2085H

Hex Code- C3, 85,20

Binary code- 1100 0011, 1000 0101, 0010 0000

Note – These instructions would require three memory locations to store the binary codes. The mnemonic is always followed by 16-bit data (or adr).

Unit-II: Addressing Modes and Instruction Cycle

Addressing Modes:

The different ways of specifying the data or the address of the data in an instruction is called addressing Modes..

- Immediate Addressing
- Register Addressing
- Direct Addressing
- Indirect Addressing
- Implied Addressing.

Immediate Addressing Mode:

- In immediate addressing mode, the data (8 / 16 bit) is specified in the instruction itself.
- The immediate addressing instructions are either 2 bytes or 3 bytes long.
- In 2 byte instruction, the first byte is OPCODE, and the second byte is the 8-bit data.
- In 3 byte instruction, the first byte is OPCODE, second and third bytes are 16-bit data.
- **The instruction containing the letter "I" indicate immediate addressing mode.**

Examples:

1. **MVI A, A0H** : This instruction transfers immediate data (A0 H) to A register.
2. **LXI H, C200H**: This instruction transfer 16-bit immediate data C200 to HL register pair. Lower order data(00H) to L register and high order data (C2H) to H register.

Register Addressing Mode:

- In register addressing mode the source and destination operands are general-purpose registers.
- The register addressing instructions are generally of 1 byte i.e OPCODE only.

- The OPCODE specifies the operation and registers to be used to perform the operation.

Examples:

1. **MOV D, B** : This instruction copies the contents of register B to the D register. The source and destination operands are both registers.
2. **ADD B** : This instruction adds the content of B register and A register, The data is present in both B and A registers. The result is stored in the accumulator.
3. **PCHL** : This instruction will transfer the content of register pair HL to the PC (Program Counter)

Direct Addressing Mode:

- In direct addressing mode, the 16-bit address of the operand is given within the instruction itself.
- The instruction in the direct addressing mode is 3-byte instructions. The first byte is OPCODE, the second slower order address mode and the third is the higher-order address mode.
- For I/O instruction that uses direct addressing mode are 2-byte as the address if I/O is one byte.

Examples:

1. **LDA C200 H** : Load accumulator directly from the memory location. In this instruction, the contents of C200 memory location are transferred to the accumulator.
2. **STA C200 H** : Store accumulator directly to memory location. In this instruction, the content of the accumulator are store at memory location C200 H.

Indirect Addressing Mode:

- In indirect addressing mode the instruction reference the memory through a register pair.
- i.e. the memory address where the operand is located is specified by the content of a register pair.

Examples:

1. **MOV A, M** : In this case, M is a memory pointer specifying the HL register pair where the address is stored. The contents of the HL pair are used as addresses and the content of that memory location is transferred to the accumulator.
2. **LDAX B** : In this case, the BC register pair is used as an address and the content of the memory location specified by the BC register pair is copied to the accumulator.

Implied Addressing or Implicit Addressing Mode:

- The implied mode of addressing does not require any operand.
- The data is specified within OPCODE itself.
- Generally, the implied addressing mode instruction is a 1-byte instruction.
- The data is supposed to be present generally in the accumulator.

Examples:

- **RAL** : Rotate accumulator left, it operates on the data in accumulator only. So whenever RAL is used it is implied that the data to be operated on is available in the accumulator only.
- **CMC** : Complement carry flag.

Instruction Cycle, Fetch Cycle & Machine Cycle:

During normal operation, the microprocessor sequentially fetches, decodes and executes one instruction after another until a halt instruction (HLT) is executed. The fetching, decoding and execution of a single instruction constitutes an **instruction cycle.**

Instruction Cycle:

When a Microprocessor executes a program , the instructions (1, 2 or 3 bytes in length) are executed sequentially by the system. The time taken by the microprocessor to complete one instruction is called instruction cycle. An instruction cycle consists of one to six machine cycles. An Instruction cycle consists of fetch cycle (FC) & execute cycle (EC). Thus,

Instruction Cycle = Fetch Cycle + Execute Cycle

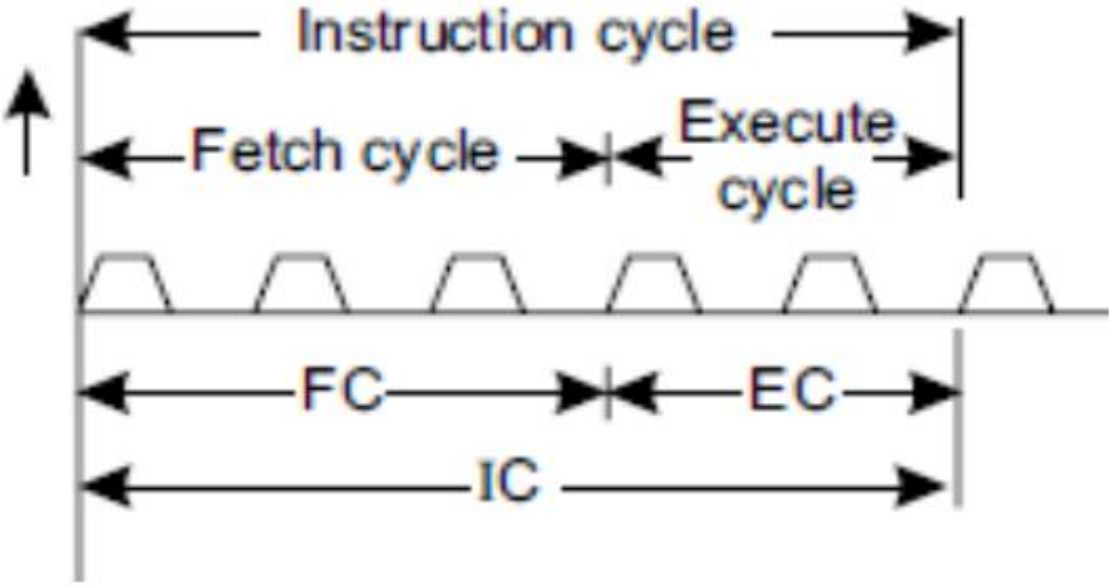

Fetch Cycle:

Time required to fetch an opcode (operation code) from a memory location is called fetch cycle. A typical fetch cycle may consist of 3 clock periods/cycles referred as **T states**. In the first T1 state , the memory address, residing in the program counter (PC) , is sent to the memory. In T2 state, the content of the memory (i.e the opcode is read from the

memory). In the third T3 state the opcode is sent via the data bus to the instruction register.

A typical fetch cycle may look like following,

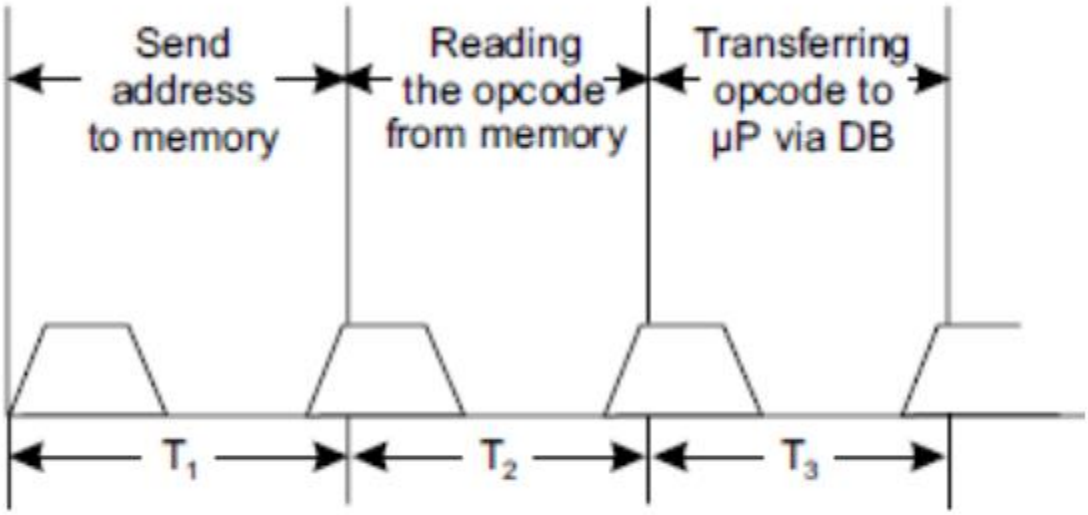

Figure 1: A typical Fetch Cycle (FC) of a microprocessor

Machine Cycle:

A Machine cycle is is the time required to complete one operation of accessing either the memory or an I/O device. A machine cycle consist of three to six clock periods/cycles (**T-states)**

There are seven different types of machine cycles in the 8085A. Three status signals IO/M, S1 and S0 identify each type as shown in Table 1.1. These signals are generated at the beginning of each machine cycle and remained valid for the duration, of the cycle.

Machine Cycle	Status			Control		
	$IO/\overline{M}$	S_1	S_0	$\overline{RD}$	$\overline{WR}$	$\overline{INTA}$
Opcode Fetch	0	1	1	0	1	1
Memory Read	0	1	0	0	1	1
Memory Write	0	0	1	1	0	1
I/O Read	1	1	0	0	1	1
I/O Write	1	0	1	1	0	1
INTR Acknowledge	1	1	1	1	1	0
Bus Idle	0	0	0	1	1	1

Table 1.1 8085 machine cycles