# Unit III :- Network Architecture & Hardware

## Protocol Stack Design Issues of the layers

A number of design issues exist for the layer to layer approach of computer networks. Some of the main design issues are as follows −

### Addressing

At a particular time, innumerable messages are being transferred between large numbers of computers. So, a naming or addressing system should exist so that each layer can identify the sender and receivers of each message.

### Error Control

Unreliable channels introduce a number of errors in the data streams that are communicated. So, the layers need to agree upon common error detection and error correction methods so as to protect data packets while they are transferred.

### Flow Control

If the rate at which data is produced by the sender is higher than the rate at which data is received by the receiver, there are chances of overflowing the receiver. So, a proper flow control mechanism needs to be implemented.

# Multiplexing and Demultiplexing

## What is Multiplexing?

Multiplexing is a technique used to combine and send the multiple data streams over a single medium. The process of combining the data streams is known as multiplexing and hardware used for multiplexing is known as a multiplexer.

Multiplexing is achieved by using a device called Multiplexer (**MUX**) that combines n input lines to generate a single output line. Multiplexing follows many-to-one, i.e., n input lines and one output line.

## What is Demultiplexing?

Demultiplexing is a technique used to seperate and send the single data streams over a multiple medium. The process of seperating the data streams is known as demultiplexing and hardware used for demultiplexing is known as a demultiplexer.

Demultiplexing is achieved by using a device called Demultiplexer (**DEMUX**) available at the receiving end. DEMUX separates a signal into its component signals (one input and n outputs). Therefore, we can say that demultiplexing follows the one-to-many approach.

- Multiplexing technique is widely used in telecommunications in which several telephone calls are carried through a single wire.

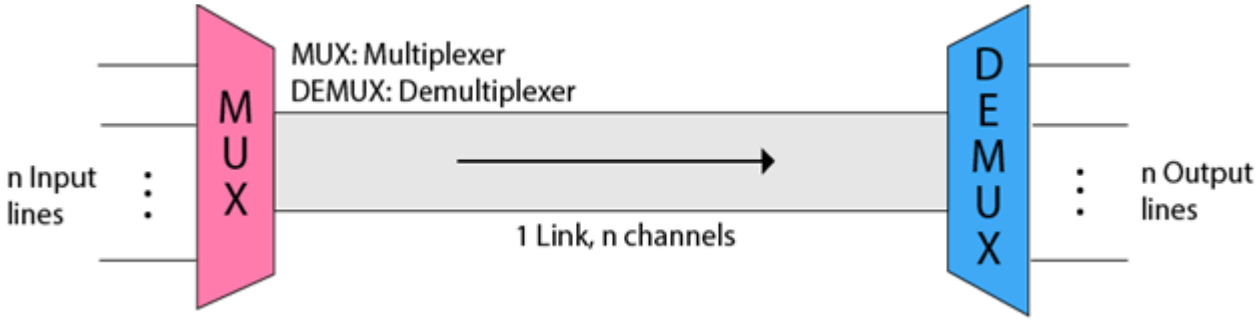

# Network Devices - Router

## What is a router?

A router is a piece of network hardware responsible for forwarding packets to their destinations. Routers connect to two or more IP networks or subnetworks and pass data packets between them as needed. Routers are used in homes and offices for setting up local network connections. More powerful routers operate all over the Internet, helping data packets reach their destinations.

- Routers work at the OSI model **network layer**. The main functions of a router are first to determine the best path that each packet should take to get to its destination and second to send the packet on its way.
- Sending the packet out the appropriate interface, along the best path, is also called ***switching the packet*** because the packet is encapsulated in a new frame, with the appropriate framing information.

Routers are normally used to connect one LAN to another.
Typically, when a WAN is set up, there will be at least two routers used.

## What is routing?

Network routing is the process of selecting a path across one or more networks.

Routing tables can either be static or dynamic. Static routing tables do not change. A network administrator manually sets up static routing tables. This essentially sets in stone the routes data packets take across the network, unless the administrator manually updates the tables.

Dynamic routing tables update automatically. Dynamic routers use various routing protocols (see below) to determine the shortest and fastest paths. They also make this determination based on how long it takes packets to reach their destination — similar to the way Google Maps, Waze, and other GPS services determine the best driving routes based on past driving performance and current driving conditions.

Dynamic routing requires more computing power, which is why smaller networks may rely on static routing. But for medium-sized and large networks, dynamic routing is much more efficient.

# Network Devices- Router

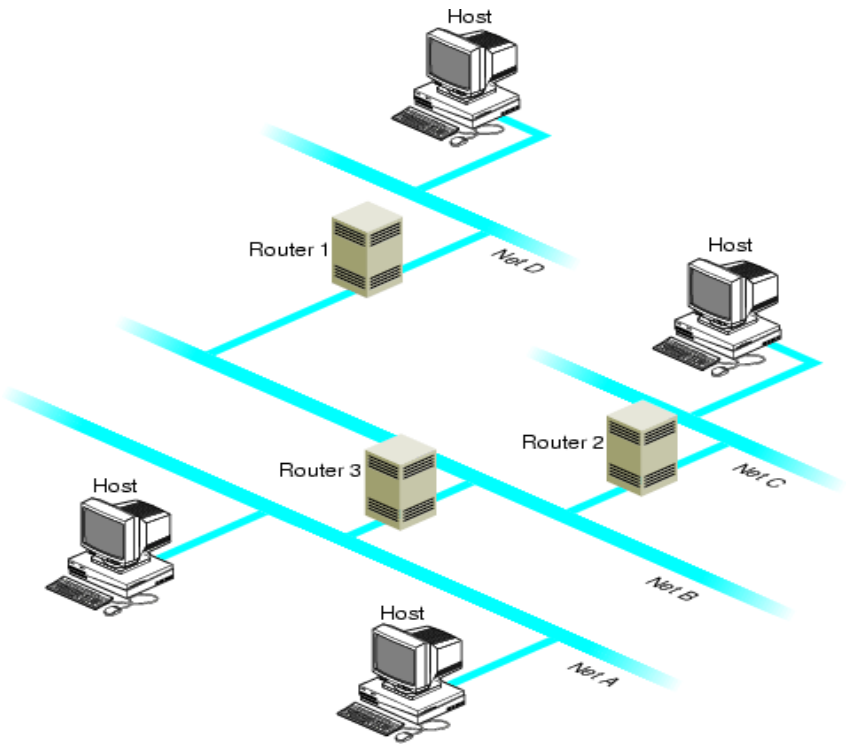

# Network Devices

Network device is the physical device that is used to connect computer hardware such as workstation, printers, faxes, scanners and other electronic devices to a computer network.

It is also referred to as an intermediary device that helps to transfer information from source to destination in a faster, secure and reliable way on the same network or different networks.

Network devices are the devices that interconnect networks.Because these devices connect network entities, they are known as **connectivity devices.** These devices include

- Network Interface Card (NIC)
- Hub
- Switch
- Bridge
- Gateway

# Network Devices- NIC

- Network Interface Card (NIC)
- NIC stands for Network Interface Card. This is also known as network adapter card, Ethernet Card and LAN card.
- NIC allows a networking device to communicate with the other networking device. In modern computer systems, it is an internal hardware component.
- LAN cards are mounted in different shaped slots on the motherboard.
- Most NIC computers are built-in.
- LAN cards have a unique code of 48 bits. This unique code is called the MAC (Media Access Control) address. This MAC address is stored in the card's ROM. The NIC has RJ45 socket where network cable is physically plugged in.

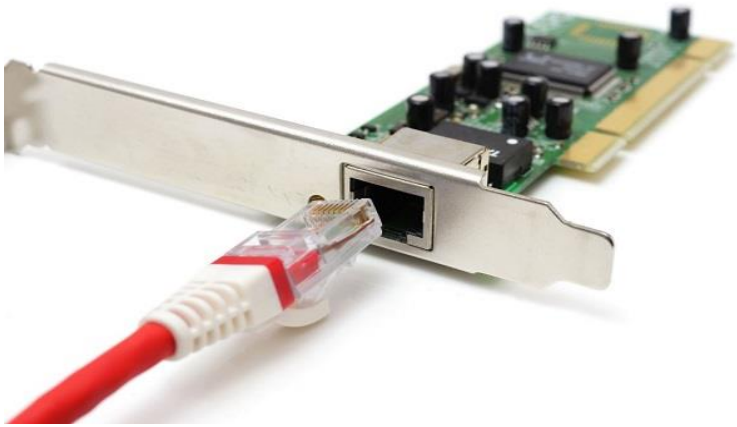

NIC converts the data packets between two different data transmission technologies. A PC uses parallel data transmission technology to transmit the data between its internal parts while the media that provides connectivity between different PCs uses serial data transmission technology.

# Network Devices- Switch

packets are checked for collision and other network errors. The data is transmitted in full duplex mode

Data transmission speed in switches can be double that of other network devices like hubs used for networking. This is because switch shares its maximum speed with all the devices connected to it. This helps in maintaining network speed even during high traffic. In fact, higher data speeds are achieved on networks through use of multiple switches.

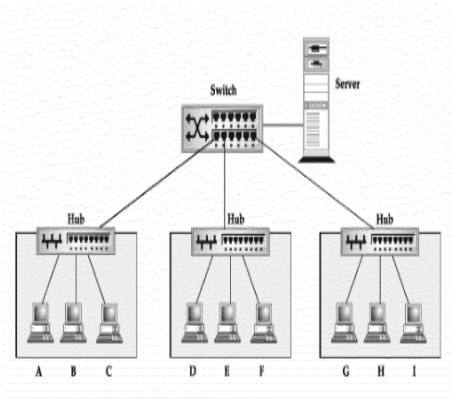

Switch is a network device that connects other devices to Ethernet networks through twisted pair cables. It uses packet switching technique to receive, store and forward data packets on the network. The switch maintains a list of network addresses of all the devices connected to it.

On receiving a packet, it checks the destination address and transmits the packet to the correct port.

# Network Devices - Hub

A hub is basically a multiport repeater.

- Hub is a centralized device that connects multiple devices in a single LAN network.
- Hubs cannot filter data, so data packets are sent to all connected devices.
- When Hub receives the data signals from a connected device on any of its port, except that port, it forwards those signals to all other connected devices from the remaining ports.

- 
- In other words, collision domain of all hosts connected through Hub remains one. Also, they do not have intelligence to find out best path for data packets which leads to inefficiencies and wastage.
- Usually, Hub has one or more uplink ports that are used to connect it with another Hub.

# Network Devices- Bridge

A network bridge is an electronic device which operate at data link layer or layer 2 of OSI model. It is considered to be more intelligent than hub, since it forwards the data frame on the basis of MAC address.

It receives the incoming frame, reads the source and destination MAC address and then forward the frame to a particular port. It is a two-port device having single input and single output port.

It is used to divide single local area network working on same protocol to different segments. Each segment in LAN represents a separate collision domain, thus by reducing the number of collisions on the network and hence the bridge improves the network performance.

- Bridge is a network device that connects two similar network segments together. The primary function of a bridge is to keeptraffic separated on both sides of the bridge.
- For example, with 200 people on one Ethernet segment, theperformance will be mediocre, because of the design of Ethernet and the number of workstations that are fighting totransmit. If you divide the segment into two segments of 100workstations each, the traffic will be much lower on either side and performance will increase.
- The main disadvantage to bridges is that they can't connect dissimilar network types or perform intelligent path selection.For that function, you would need a router.

# Network Devices- Bridge

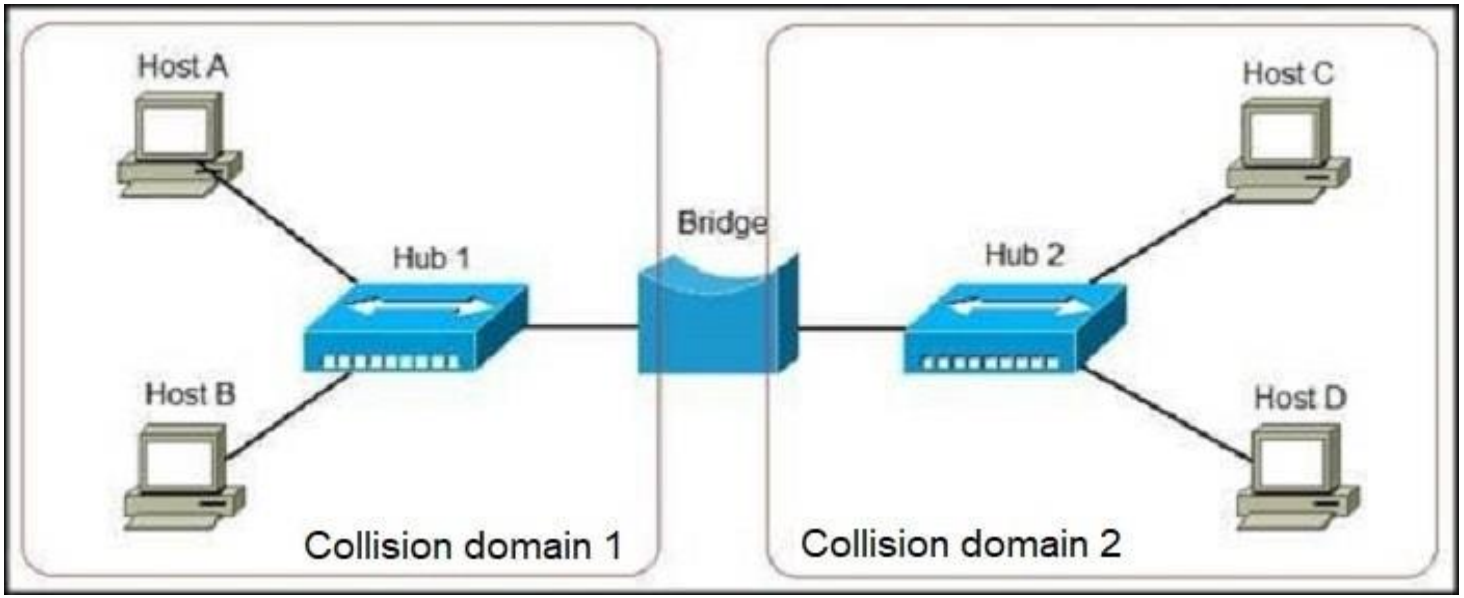

# Network Devices - Gateway

Gateway is a network device used to connect two or more networks having different protocols.

A gateway usually is a computer with multiple NICs connected to different networks. A gateway can also be configured completely using software. As networks connect to a different network through gateways, these gateways are usually hosts or end points of the network.

Gateway uses packet switching technique to transmit data from one network to another. In this way it is similar to a router, the only difference being router can transmit data only over networks that use same protocols.

Gateways are also called protocol converters and can operate at any network layer. Gateways are generally more complex than switch or router.

IP TechnologyLabs
Network Communications Simplified
FastLane Model 8000
Point-Source Network Secure Gateway
1 A
2 B
3 C
4 D
5 E
PoE PSE
PoE PD

# Network Devices- Terminology

- Some terminology related to the operation of network devices :

  - Domain is a specific part of a network.
  - Bandwidth is the amount of data that can be carried across a network in a given time period.
  - Unicast data is data meant for a specific device.
  - Broadcast data is data meant for all devices; a special broadcast address indicates this.
  - Multicast data is data destined for a specific group of devices; a special address indicates this.
  - A bandwidth domain, known as a collision domain for Ethernet LANs, includes all devices that share the same bandwidth.
  - A broadcast domain includes all devices that receive each other's' broadcasts (and multicasts)