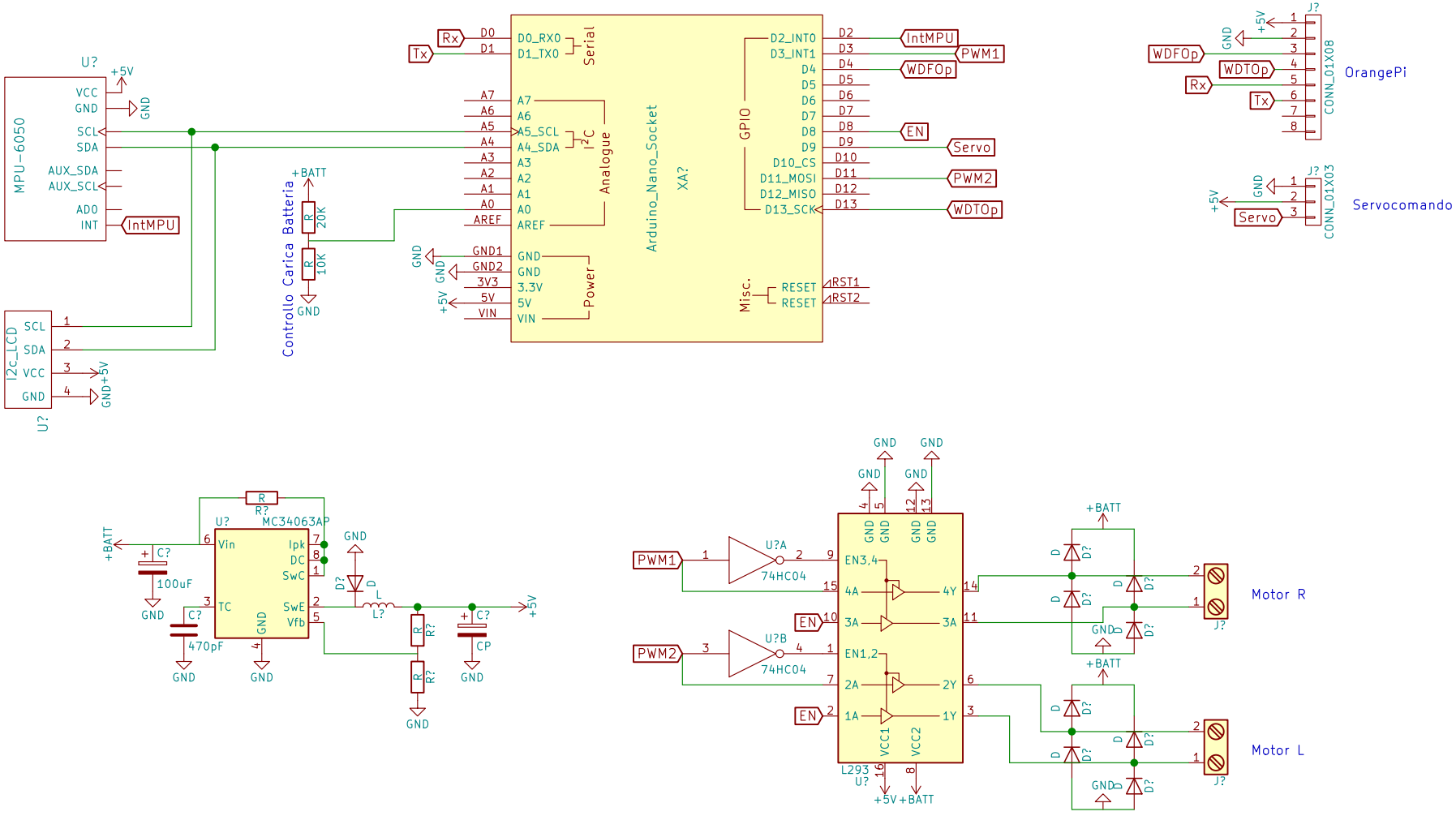

Raspibo

Sheet: /

File: SBR.sch

Title: Sel Balancing Robot

Size: A4	Date: 8/7/2019	**Rev: V1.0**
KiCad E.D.A. kicad 4.0.6		Id: 1/1