Design and Verification of Up Counter, Down Counter, and Up-Down Counter

Objectives:

1. To design and implement Up Counter, Down Counter, and Up-Down Counter circuits using flip-flops and basic digital logic components.
2. To verify the counting sequence and functional behaviour of the implemented counters through experimental observation.

Basic Theory:

A Counter is a sequential logic circuit that goes through a fixed sequence of states when clock pulses are applied. The Output of the counter represents a binary count. Counters are built using flip-flops usually JK or T flip flop.

1. UP Counter:

An Up counter counts in increasing order: 0, 1, 2, 3, 4, 5, 6, 7 and then resets back to 0. Each clock pulse increments the count by 1.

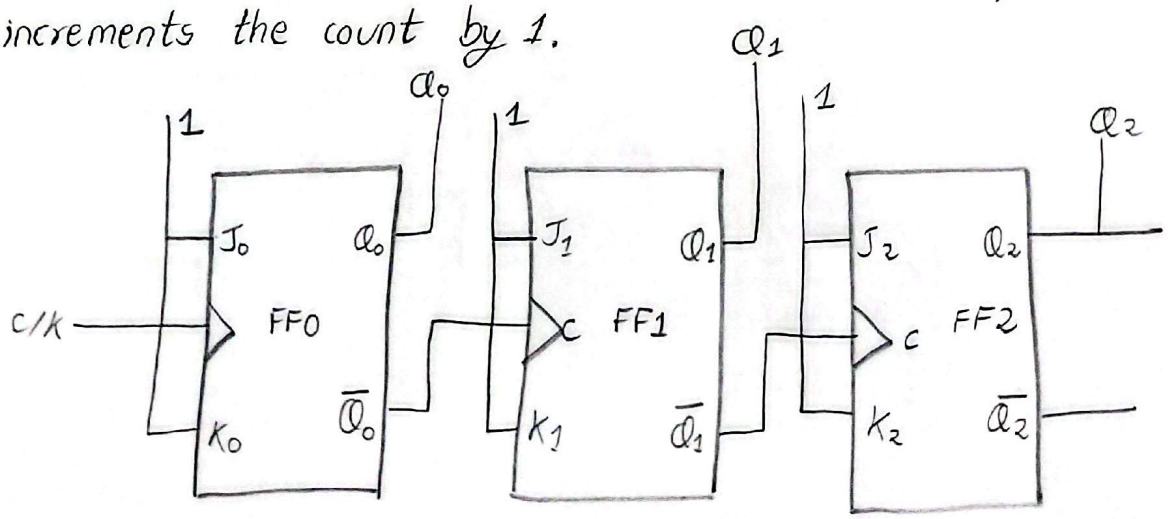

fig. UP counter

2. Down Counter:

A Down Counter counts in decreasing order: 7, 6, 5, 4, 3, 2, 1, 0 then resets back to 7. It is similar to an up counter but uses the complemented output (Q') of each flip-flop as the clock for next stage.

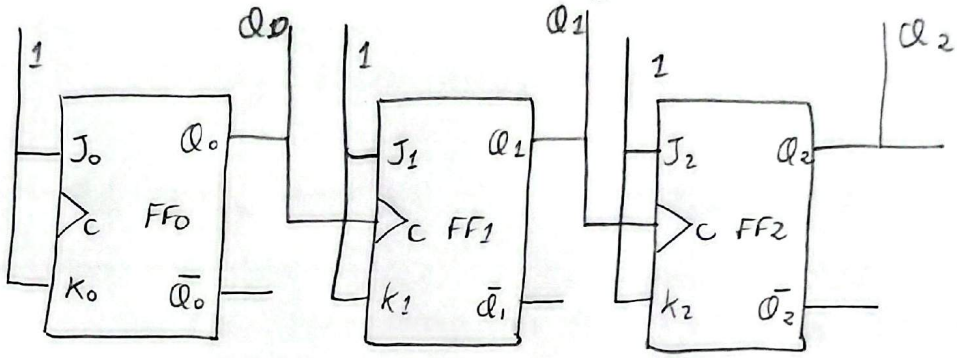

fig. Down Counter

3. Up-Down Counter:

An Up-Down counter can count in both directions depending on a mode control signal (M). When M = 1, it counts up. When M = 0, it counts down. It uses logic gates (AND/OR) to select Q or Q' as the clock input for the next flip flop based on the mode.

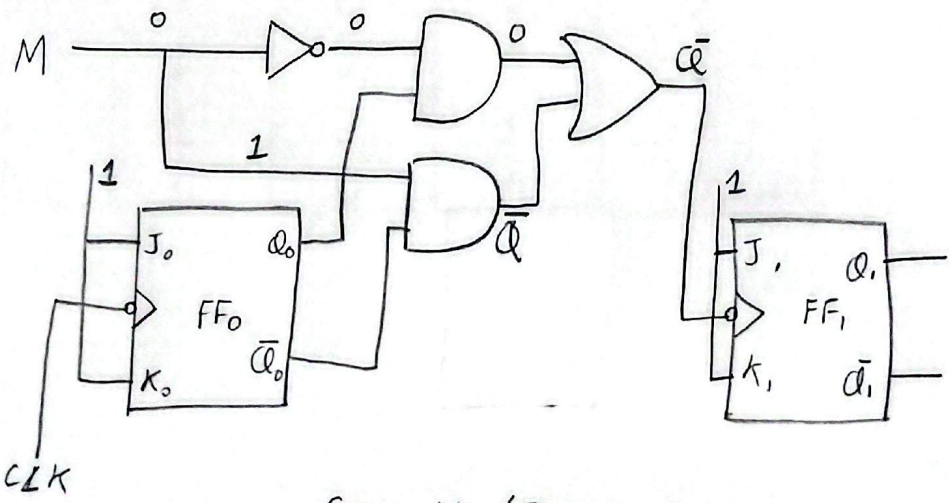

fig. Up/Down Counter

$$0 \rightarrow 1 \rightarrow 2 \rightarrow 3 \rightarrow 4 \rightarrow 5 \rightarrow 6 \rightarrow 7$$

fig. State diagram for Up Counter

$$7 \rightarrow 6 \rightarrow 5 \rightarrow 4 \rightarrow 3 \rightarrow 2 \rightarrow 1 \rightarrow 0$$

fig. State diagram for Down Counter

$$0 \rightarrow 1 \rightarrow 2 \rightarrow 3 \qquad 3 \rightarrow 2 \rightarrow 1 \rightarrow 0$$

fig. State diagram for Up/Down Counter

Truth Table :

Up Counter (3 bit)

State	Q_2	Q_1	Q_0	Decimal
0	0	0	0	0
1	0	0	1	1
2	0	1	0	2
3	0	1	1	3
4	1	0	0	4
5	1	0	1	5
6	1	1	0	6
7	1	1	1	7
↑	0	0	0	0(Reset)

* Down Counter (3-bit)

State	Q_2	Q_1	Q_0	Decimal
0	1	1	1	7
1	1	1	0	6
2	1	0	1	5
3	1	0	0	4
4	0	1	1	3
5	0	1	0	2
6	0	0	1	1
7	0	0	0	0
↓	1	1	1	7 (Reset)

* Up-Down Counter (3 bit):

M (Mode)	State	Q_2	Q_1	Q_0
0	0	0	0	0
0	1	0	0	1
0	2	0	1	0
0	3	0	1	1
0	4	1	0	0
0	5	1	0	1
0	6	1	1	0
0	7	1	1	1
1	0	0	0	0
1	1	0	0	1
1	2	0	1	0
1	3	0	1	1
1	4	1	0	0
1	5	1	0	1
1	6	1	1	0
1	7	1	1	1

Diagrams and Observation :

Objective 1 : Building a Up Counter using JK flip-flop. (3 bit)

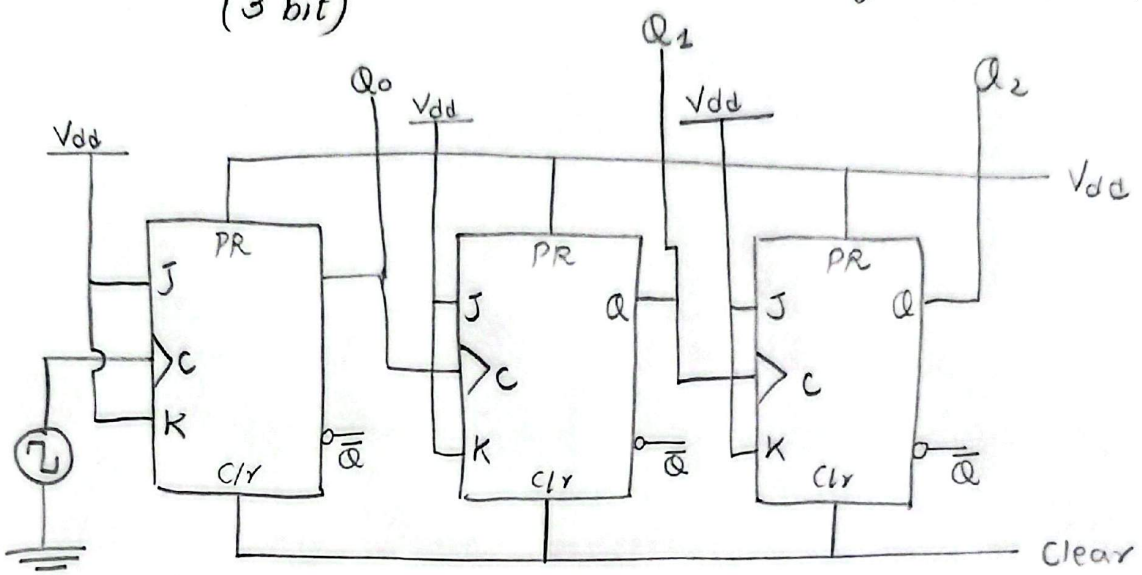

fig. 3 bit Up Counter

Truth Table

	Expected			Observed		
Clock Pulse	Q_2	Q_1	Q_0	Q_2	Q_1	Q_0
1	0	0	0	0	0	0
2	0	0	1	0	0	1
3	0	1	0	0	1	0
4	0	1	1	0	1	1
5	1	0	0	1	0	0
6	1	0	1	1	0	1
7	1	1	0	1	1	0
8	1	1	1	1	1	1
9↑	0	0	0	0	0	0

Hence, The Expected result and Observed Result are the same.

Objective 2 : Building a Down Counter using JK flip flop (3-bit)

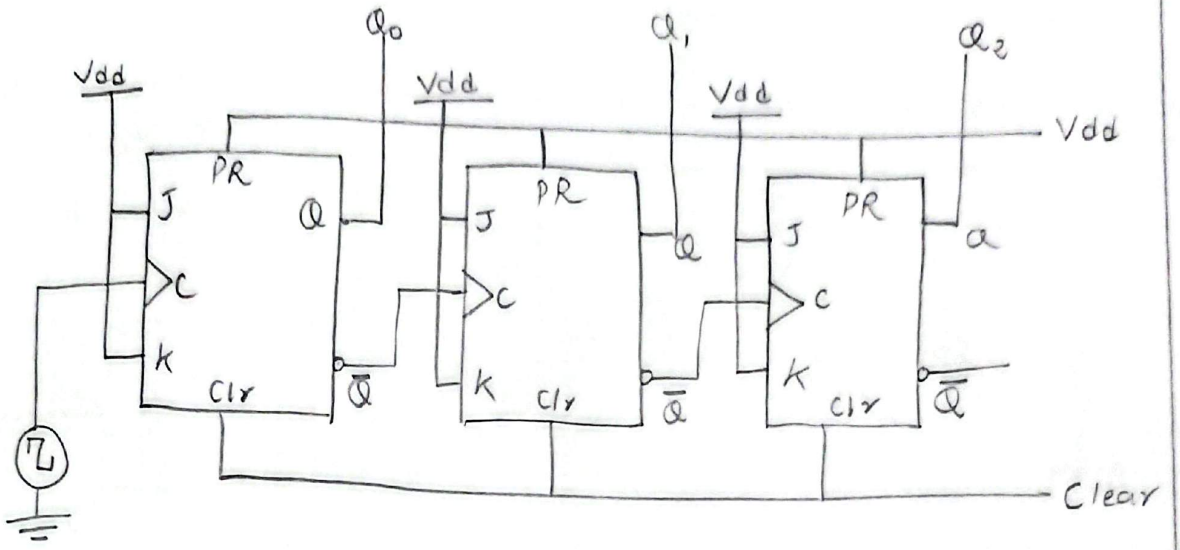

fig. Down Counter

Truth Table

	Expected			Observed		
Clock Pulse	Q_2	Q_1	Q_0	Q_2	Q_1	Q_0
1	1	1	1	1	1	1
2	1	1	0	1	1	0
3	1	0	1	1	0	1
4	1	0	0	1	0	0
5	0	1	1	0	1	1
6	0	1	0	0	1	0
7	0	0	1	0	0	1
8	0	0	0	0	0	0
9↓	1	1	1	1	1	1

Hence, The Expected result and Observed result are the same.

Objective 3: Building a Up-Down Counter using a JK flip flop and Mode.

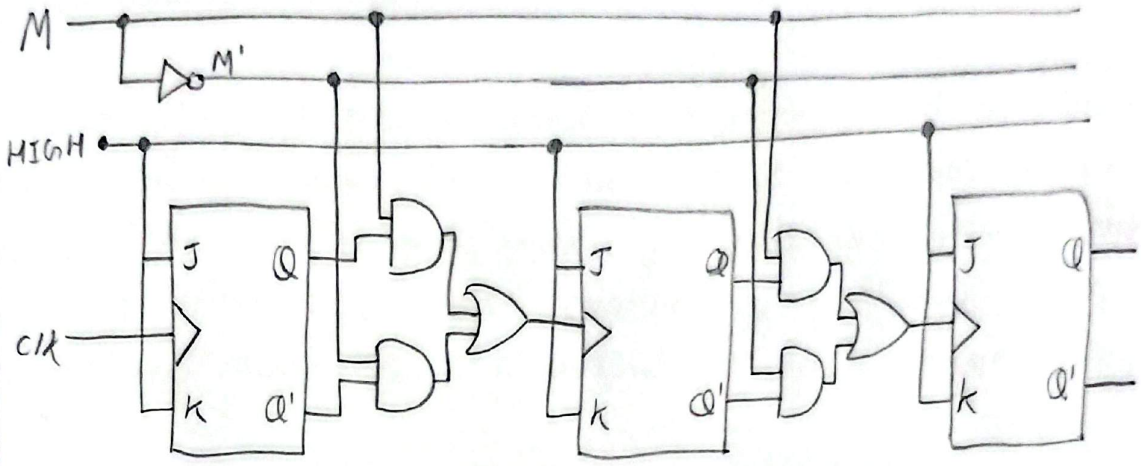

fig Up-Down Counter

Truth Table

Mode ~~Truth Table~~	Expected Q_2	Q_1	Q_0	Observed Q_2	Q_1	Q_0
0	0	0	0	0	0	0
0	0	0	1	0	0	1
0	0	1	0	0	1	0
0	0	1	1	0	1	1
0	1	0	0	1	0	0
0	1	0	1	1	0	1
0	1	1	0	1	1	0
0	1	1	1	1	1	1
1	1	1	1	1	1	1
1	1	1	0	1	1	0
1	1	0	1	1	0	1
1	1	0	0	1	0	0
1	0	1	1	0	1	1
1	0	1	0	0	1	0
1	0	0	1	0	0	1
1	0	0	0	0	0	0

Hence, The Expected result and Observed result are the Same

Discussion and Conclusion:

In this lab, we designed and implemented a 3 bit Up Counter, 3 bit down Counter and 3 bit Up-Down counter using J-K flip flop and basic logic gates. We verified the counting sequence of each counter by applying clock pulses and observing the output at each stage.