IMPLEMENTATION OF HALF-SUBTRACTOR AND FULL-SUBTRACTOR.

BJECTIVE:

To verify the functionality of Half-subtractor and full-ubtractor circuits through the truth table and output alidation.

HEORY

alf-subtractor

A combinational circuit that subtracts two bits and produces heir difference is called Half subtractor. It also has an utput to specify if a 1 has been borrowed.

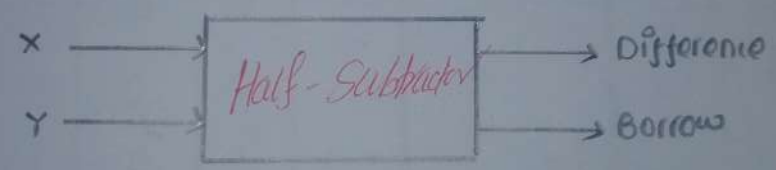

Fig: Block diagram of Half subtractor

Truth table

X	Y	Borrow (B)	Difference (D)
0	0	0	0
0	1	1	1
1	0	0	1
1	1	0	0

Full subtractor

A full subtractor is a combinational circuits that performe a subtraction between two bits, taking into account that a 1 may to have been borrowed by a lower significant state.

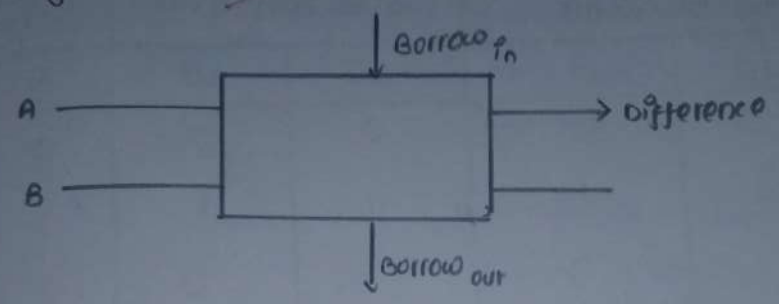

Truth table

Decimal No	A	B	C	B(borrow)	D(difference)
0	0	0	0	0	0
1	0	0	1	1	1
2	0	1	0	1	1
3	0	1	1	1	0
4	1	0	0	0	1
5	1	0	1	0	0
6	1	1	0	0	0
7	1	1	1	1	1

OBSERVATION AND DIAGRAMS

Half-subtractor

Truth table

Input		Expected output		Observed output	
A	B	B_e	D_e	B_o	D_o
0	0	0	0	0	0
0	1	1	1	1	1
1	0	0	1	0	1
1	1	0	0	0	0

K-Map simplification

B \ A	0	1
0	0	0
1	1	0

For Borrow

B \ A	0	1
0	0	1
1	1	0

For Difference

The Boolean functions for the two outputs of half-subtractor are derived from k-map as:

D(difference) = $A'B + AB'$

B(borrow) = $A'B$

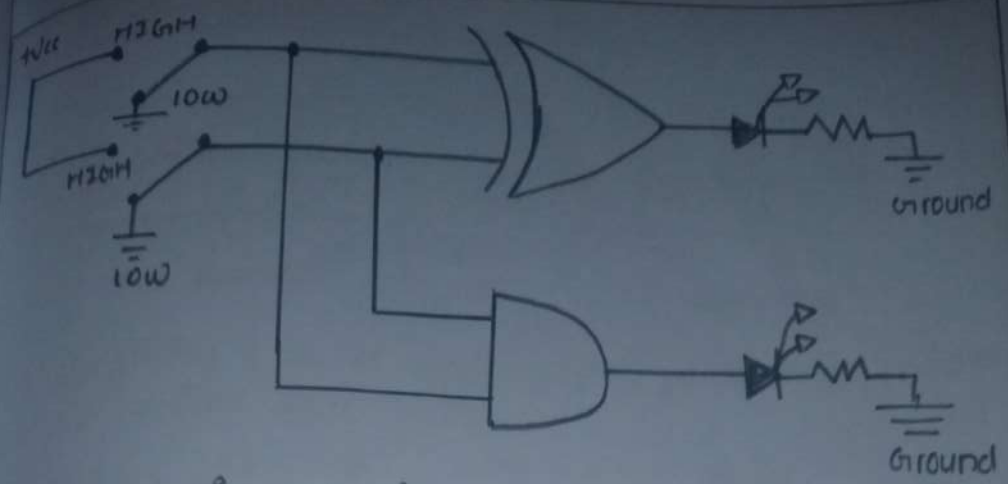

Fig: logic diagram of half-subtractor

Full - Subtractor

Truth table

Input			Expected Output		Observed Output	
A	B	C	Be	De	Bo	Do
0	0	0	0	0	0	0
0	0	1	1	1	1	1
0	1	0	1	1	1	1
0	1	1	1	0	1	0
1	0	0	0	1	0	1
1	0	1	0	0	0	0
1	1	0	0	0	0	0
1	1	1	1	1	1	1

K-Map simplification of Full-subtractor

A \ BC	00	01	11	10
0	0	1	1	1
1	0	0	1	0

For Borrow

A \ BC	00	01	11	10
0	0	1	0	1
1	1	0	1	0

For Difference

The simplified sum of product form of Boolean function can be derived from k-map as:

- Difference (D) $= A'B'C + AB'C' + A'BC' + ABC$

  $= A \oplus B \oplus C$

- Borrow (B) $= A'B + A'C + BC$

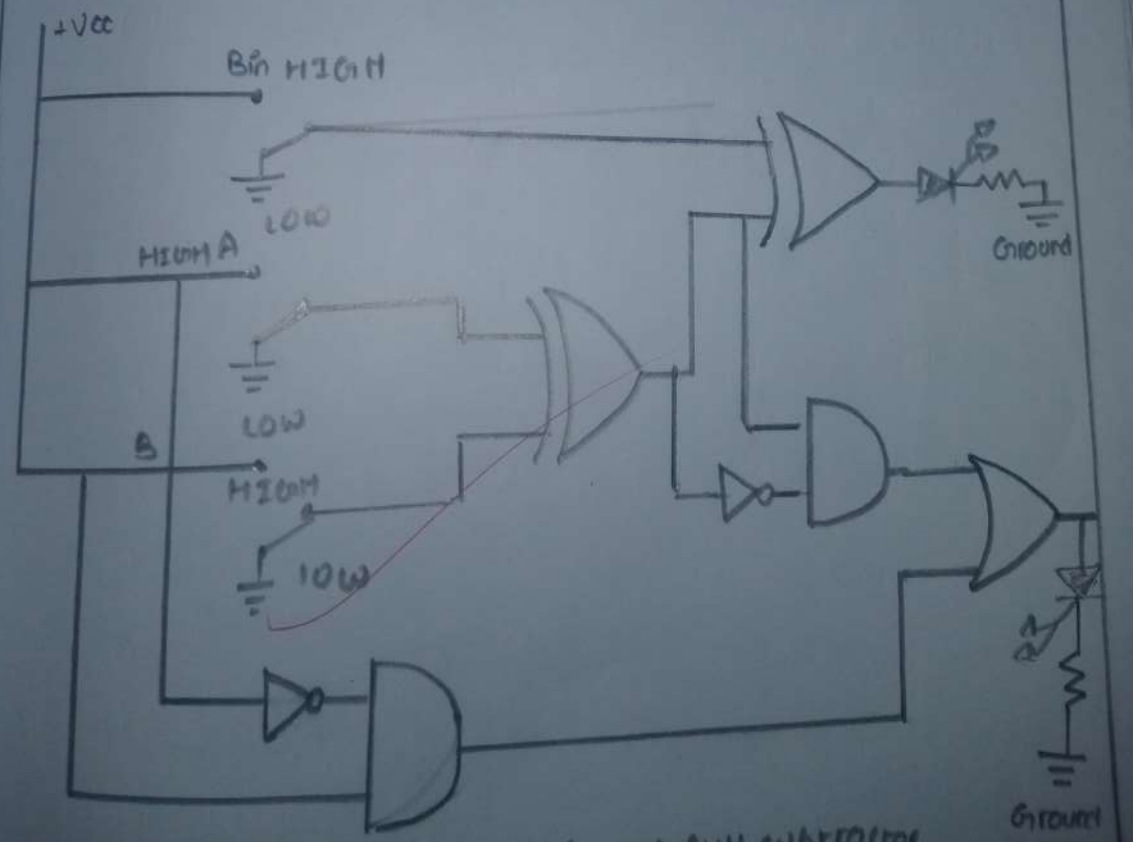

Fig: Implementation of full subtractor

SCUSION AND CONCLUSION

In this lab, we learnt about subtractors (i.e Half subtractor and full subtractor). We observed the ~~sum and carr~~ borrow and difference in both subtractors and learnt how subtractor works and how to represent them in diagram.