Lab 4: Implimentation and verification of Associative law, Distributive law and De-Morgon's law

Objective:
To design, implement and experimentally verify Associative law, Distributive law and De-Morgon's law theorms using basic logic gates and to validate the correctness through truth table analysis and hardware simulation-board results.

Theory

1) Associative law
First law (OR form)
$f = A+(B+C) = (A+B)+C$

Truth table

A	B	C	B+C	A+B	A+(B+C)	(A+B)+C
0	0	0	0	0	0	0
0	0	1	1	0	1	1
0	1	0	1	1	1	1
0	1	1	1	1	1	1
1	0	0	0	1	1	1
1	0	1	1	1	1	1
1	1	0	1	1	1	1
1	1	1	1	1	1	1

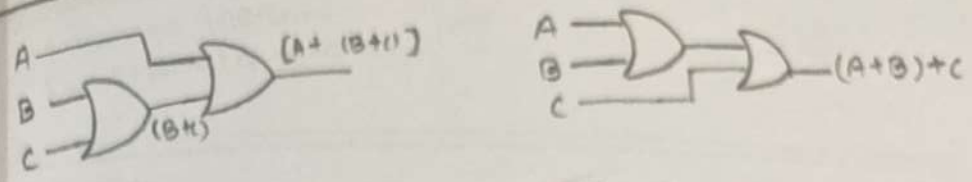

(Fig: associative law (1st law)

(ii) Second law (AND form)

$F = A\cdot(B\cdot C) = (A\cdot B)\cdot C$

Truth table

A	B	C	A·B	B·C	A·(B·C)	(A·B)·C
0	0	0	0	0	0	0
0	0	1	0	0	0	0
0	1	0	0	0	0	0
0	1	1	0	1	0	0
1	0	0	0	0	0	0
1	0	1	0	0	0	0
1	1	0	1	0	0	0
1	1	1	1	1	1	1

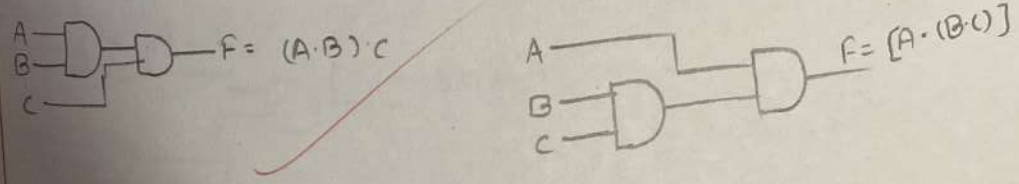

Fig (And form of associative law

2) Distributive law

1) First law (OR form)

$F = A+BC = (A+B)(A+C)$

Truth table

A	B	C	BC	A+BC	A+B	A+C	(A+B)(A+C)
0	0	0	0	0	0	0	0
0	0	1	0	0	0	1	0
0	1	0	0	0	1	0	0
0	1	1	1	1	1	1	1
1	0	0	0	1	1	1	1
1	0	1	0	1	1	1	1
1	1	0	0	1	1	1	1
1	1	1	1	1	1	1	1

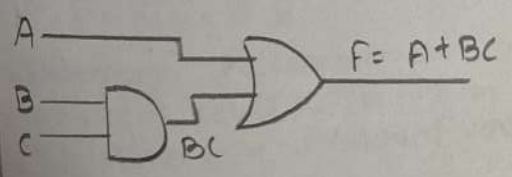

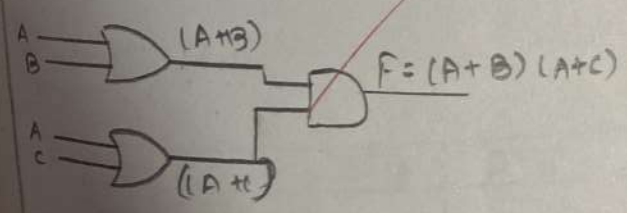

fig (OR form ~~associative~~ distributive law)

ii) Second law (AND form)

$F = A(B+C) = AB + AC$

Truth table

A	B	C	B+C	A(B+C)	AB	AC	AB+AC
0	0	0	0	0	0	0	0
0	0	1	1	0	0	0	0
0	1	0	1	0	0	0	0
0	1	1	1	0	0	0	0
1	0	0	0	0	0	0	0
1	0	1	1	1	0	1	1
1	1	0	1	1	1	0	1
1	1	1	1	1	1	1	1

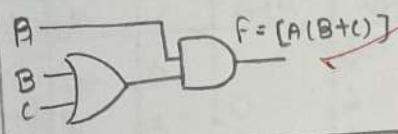

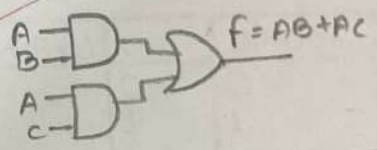

③ De-Morgans law

i) First law OR form

$F = \overline{A+B} = \bar{A} \cdot \bar{B}$

Statement: The complement sum of variable is equal to product of the complements of individual variable

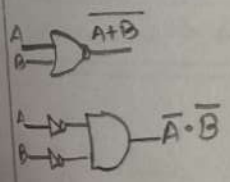

ii) Second law And form

$F = (\overline{A \cdot B}) = \bar{A} + \bar{B}$

Statement: The complement product of two variable is equal to sum of complement of individual variable

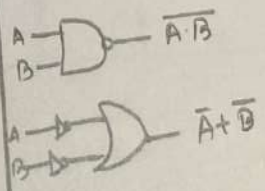

A	B	$\bar{A}$	$\bar{B}$	$\overline{A+B}$	$\bar{A} \cdot \bar{B}$
0	0	1	1	1	1
0	1	1	0	0	0
1	0	0	1	0	0
1	1	0	0	0	0

A	B	$\bar{A}$	$\bar{B}$	$\overline{A \cdot B}$	$\bar{A}+\bar{B}$
0	0	1	1	1	1
0	1	1	0	1	1
1	0	0	1	1	1
1	1	0	0	0	0

Observation and Diagrams

1) Verification of Associative law

i) First law ⇒ $F = A+(B+C) = (A+B)+C$

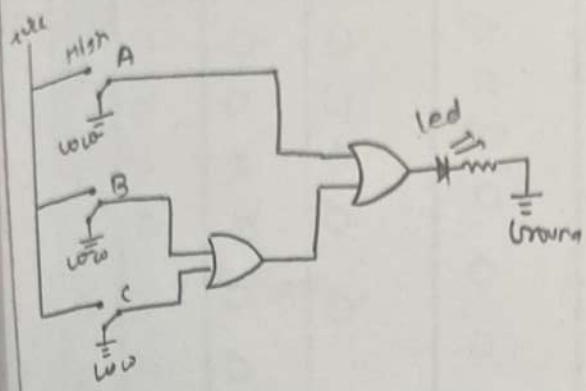

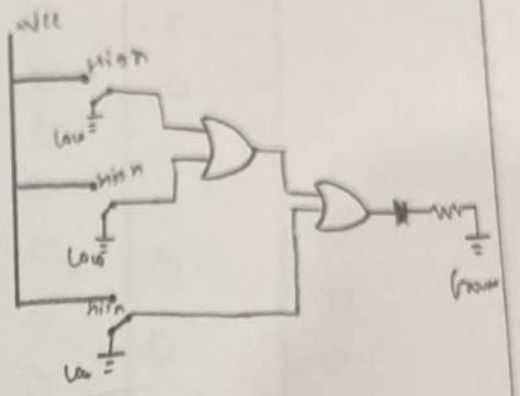

Truthtable

A	B	C	A+B	B+C	A+(B+C)	O·O	(A+B)+C	O·O
0	0	0	0	0	0	0	0	0
0	0	1	0	1	1	1	1	1
0	1	0	1	1	1	1	1	1
0	1	1	1	1	1	1	1	1
1	0	0	1	0	1	1	1	1
1	0	1	1	1	1	1	1	1
1	1	0	1	1	1	1	1	1
1	1	1	1	1	1	1	1	1

ii) Second law ⇒ $A\cdot(B\cdot C) = (A\cdot B)\cdot C$

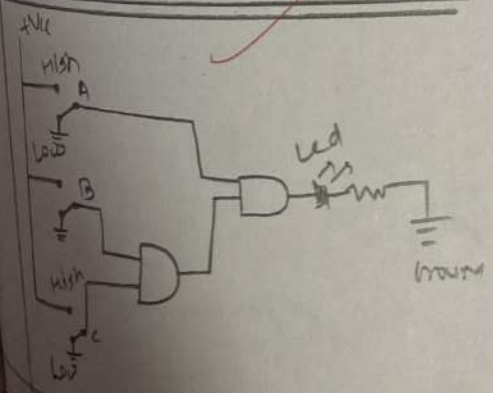

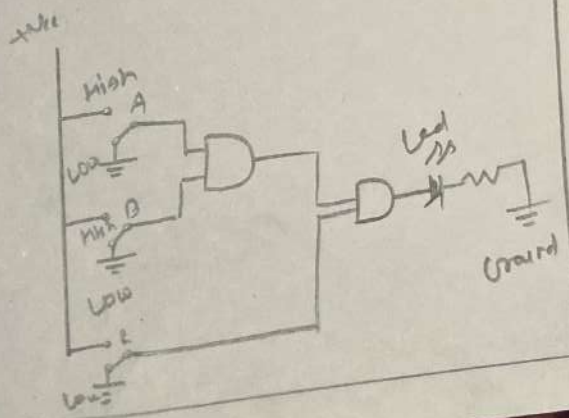

Truth table

A	B	C	B·C	A·B	A·(B·C)	0·0	(A·B)·C	0·0
0	0	0	0	0	0	0	0	0
0	0	1	0	0	0	0	0	0
0	1	0	0	0	0	0	0	0
0	1	1	1	0	0	0	0	0
1	0	0	0	0	0	0	0	0
1	0	1	0	0	0	0	0	0
1	1	0	0	1	0	0	0	0
1	1	1	1	1	1	1	1	1

2) Verification of distributive law

1) First law (OR) form

$F = A+BC = (A+B)(A+C)$

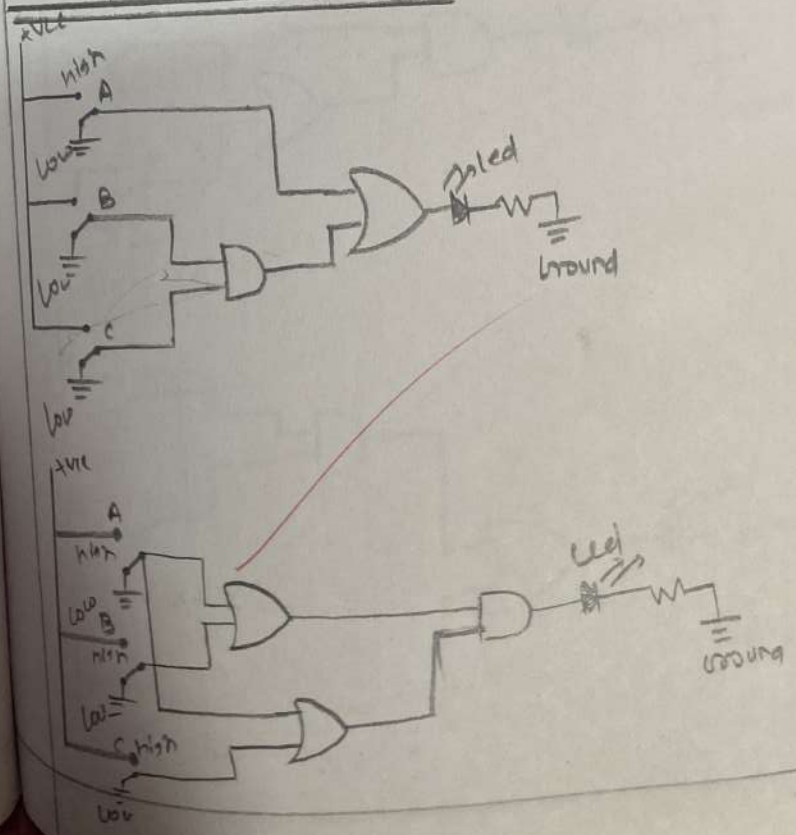

Truth-table

A	B	C	B·C	A+B	A+C	A+BC	0·0	(A+B)(B+C)	0·0
0	0	0	0	0	0	0	0	0	0
0	0	1	0	0	1	0	0	0	0
0	1	0	0	1	0	0	0	0	0
0	1	1	1	1	1	1	0	0	0
1	0	0	0	1	1	1	0	1	0
1	0	1	0	1	1	1	0	1	0
1	1	0	0	1	1	1	0	1	0
1	1	1	1	1	1	1	0	1	0

ii) Second law (And form)

$f = A(B+C) = AB+AC$

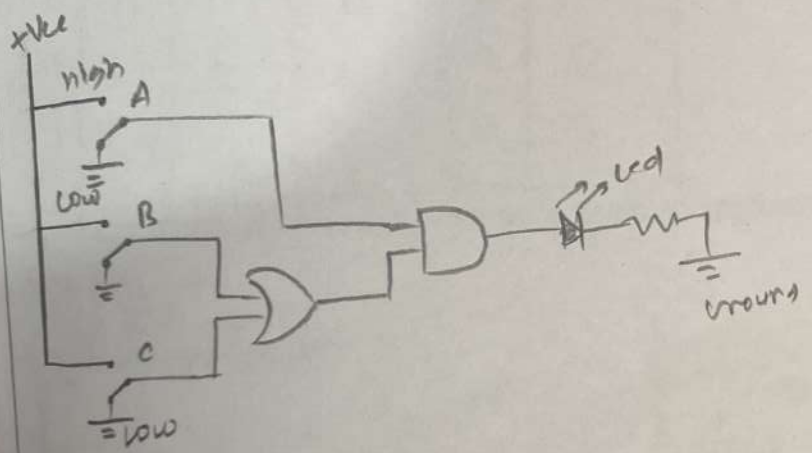

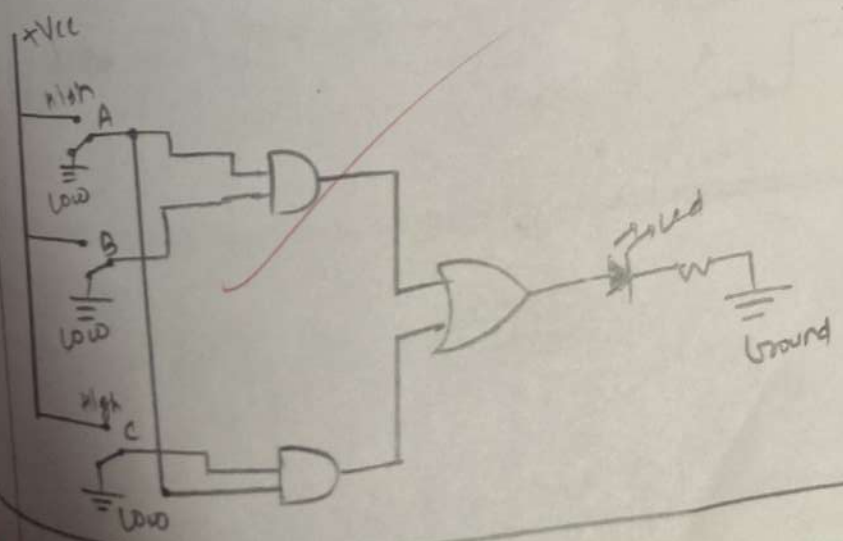

3) verification of De-Morgan's Law

I) First law

$f = \overline{A+B} = \overline{A} \cdot \overline{B}$

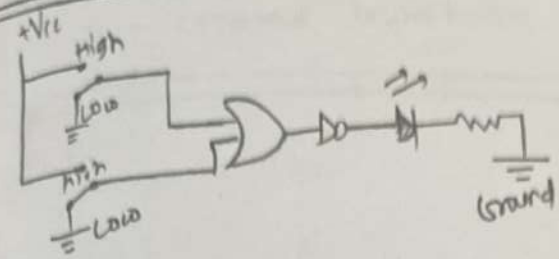

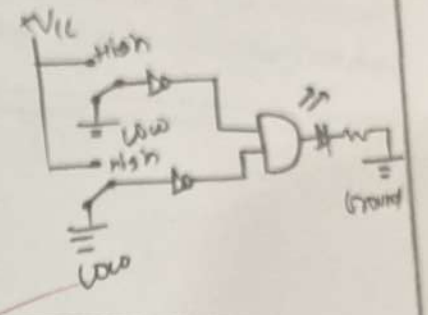

Truth table

A	B	A+B	$\overline{A+B}$	0·0	$\overline{A} \cdot \overline{B}$	0·0
0	0	0	1	1	1	1
0	1	1	0	0	0	0
1	0	1	0	0	0	0
1	1	1	0	0	0	0

II) Second Law

$f = \overline{A \cdot B} = \overline{A} + \overline{B}$

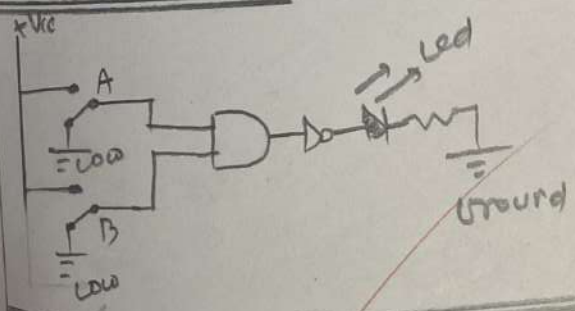

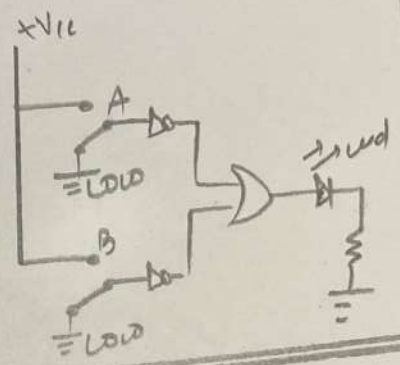

Truth table

A	B	A·B	$\overline{A \cdot B}$	0·0	$\overline{A} + \overline{B}$	0·0
0	0	0	1	1	1	1
0	1	0	1	1	1	1
1	0	0	1	1	1	1
1	1	1	0	0	0	0

Conclusion

From this lab session, we implemented and varified various law (Associative, Distributive and De-morgan's law. we created truth table and verify it experimentally