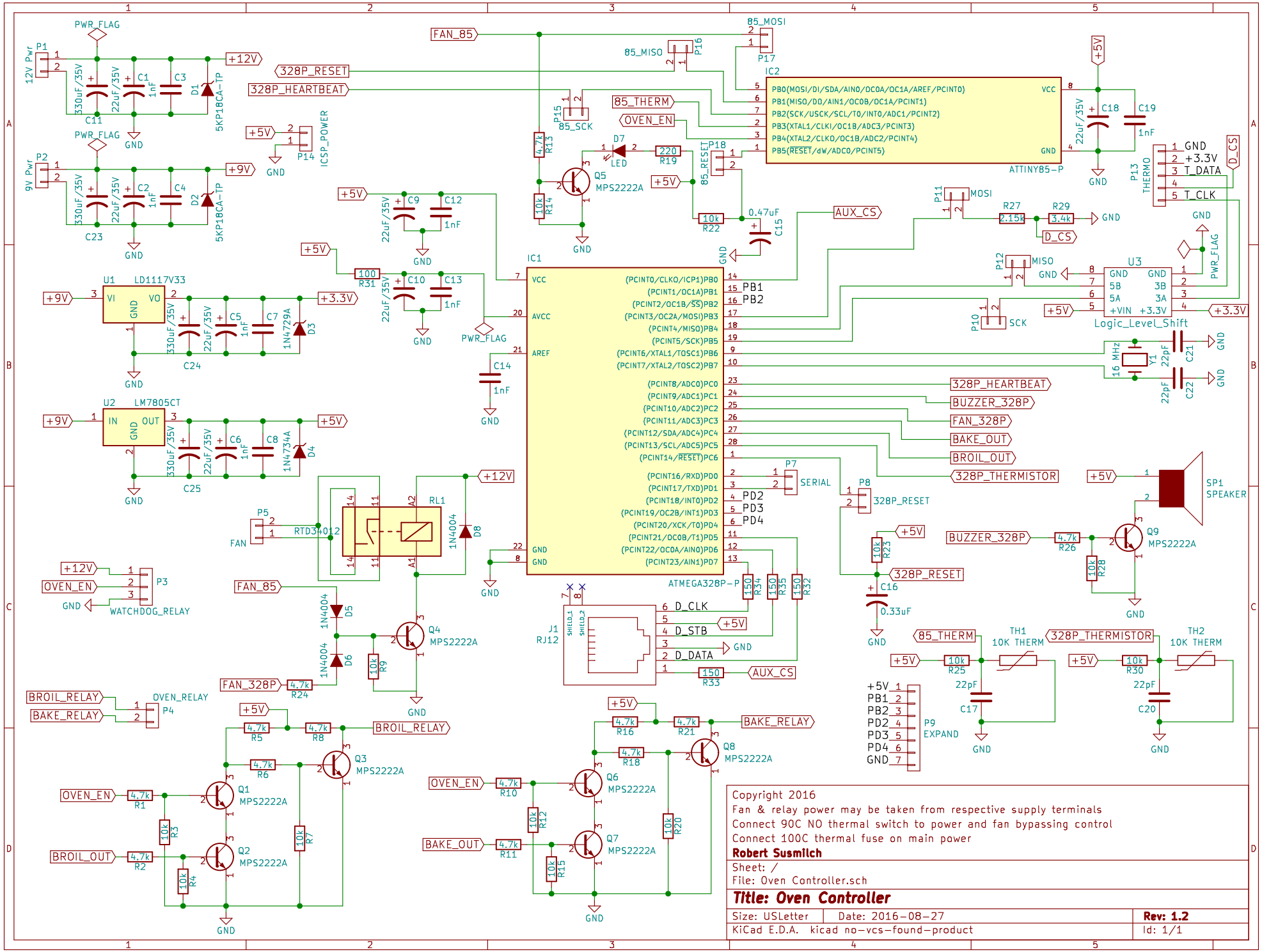
12V Pwr
9V Pwr
PWR_FLAG
+12V
+9V
+5V
+3.3V
GND
5KP18CA-TP
ICSP_POWER
FAN_85
328P_RESET
328P_HEARTBEAT
85_MOSI
85_MISO
85_SCK
85_THERM
OVEN_EN
85_RESET
LED
MPS2222A
IC2
ATTINY85-P
PB0(MOSI/DI/SDA/AIN0/OC0A/OC1A/AREF/PCINT0)
PB1(MISO/DO/AIN1/OC0B/OC1A/PCINT1)
PB2(SCK/USCK/SCL/T0/INT0/ADC1/PCINT2)
PB3(XTAL1/CLKI/OC1B/ADC3/PCINT3)
PB4(XTAL2/CLKO/OC1B/ADC2/PCINT4)
PB5(RESET/dW/ADC0/PCINT5)
VCC
GND
LD1117V33
LM7805CT
IC1
ATMEGA328P-P
(PCINT0/CLKO/ICP1)PB0
(PCINT1/OC1A)PB1
(PCINT2/OC1B/SS)PB2
(PCINT3/OC2A/MOSI)PB3
(PCINT4/MISO)PB4
(PCINT5/SCK)PB5
(PCINT6/XTAL1/TOSC1)PB6
(PCINT7/XTAL2/TOSC2)PB7
(PCINT8/ADC0)PC0
(PCINT9/ADC1)PC1
(PCINT10/ADC2)PC2
(PCINT11/ADC3)PC3
(PCINT12/SDA/ADC4)PC4
(PCINT13/SCL/ADC5)PC5
(PCINT14/RESET)PC6
(PCINT16/RXD)PD0
(PCINT17/TXD)PD1
(PCINT18/INT0)PD2
(PCINT19/OC2B/INT1)PD3
(PCINT20/XCK/T0)PD4
(PCINT21/OC0B/T1)PD5
(PCINT22/OC0A/AIN0)PD6
(PCINT23/AIN1)PD7
AUX_CS
BUZZER_328P
FAN_328P
BAKE_OUT
BROIL_OUT
328P_THERMISTOR
D_CLK
D_STB
D_DATA
SERIAL
RJ12
Logic_Level_Shift
THERMO
GND
+3.3V
T_DATA
T_CLK
D_CS
MOSI
MISO
SCK
16 MHz
SP1
SPEAKER
RTD34012
RL1
FAN
WATCHDOG_RELAY
OVEN_RELAY
BROIL_RELAY
BAKE_RELAY
TH1
10K THERM
TH2
10K THERM
EXPAND
Copyright 2016
Fan & relay power may be taken from respective supply terminals
Connect 90C NO thermal switch to power and fan bypassing control
Connect 100C thermal fuse on main power
Robert Susmilch
Sheet: /
File: Oven Controller.sch
Title: Oven Controller
Size: USLetter
Date: 2016-08-27
Rev: 1.2
KiCad E.D.A. kicad no-vcs-found-product
Id: 1/1