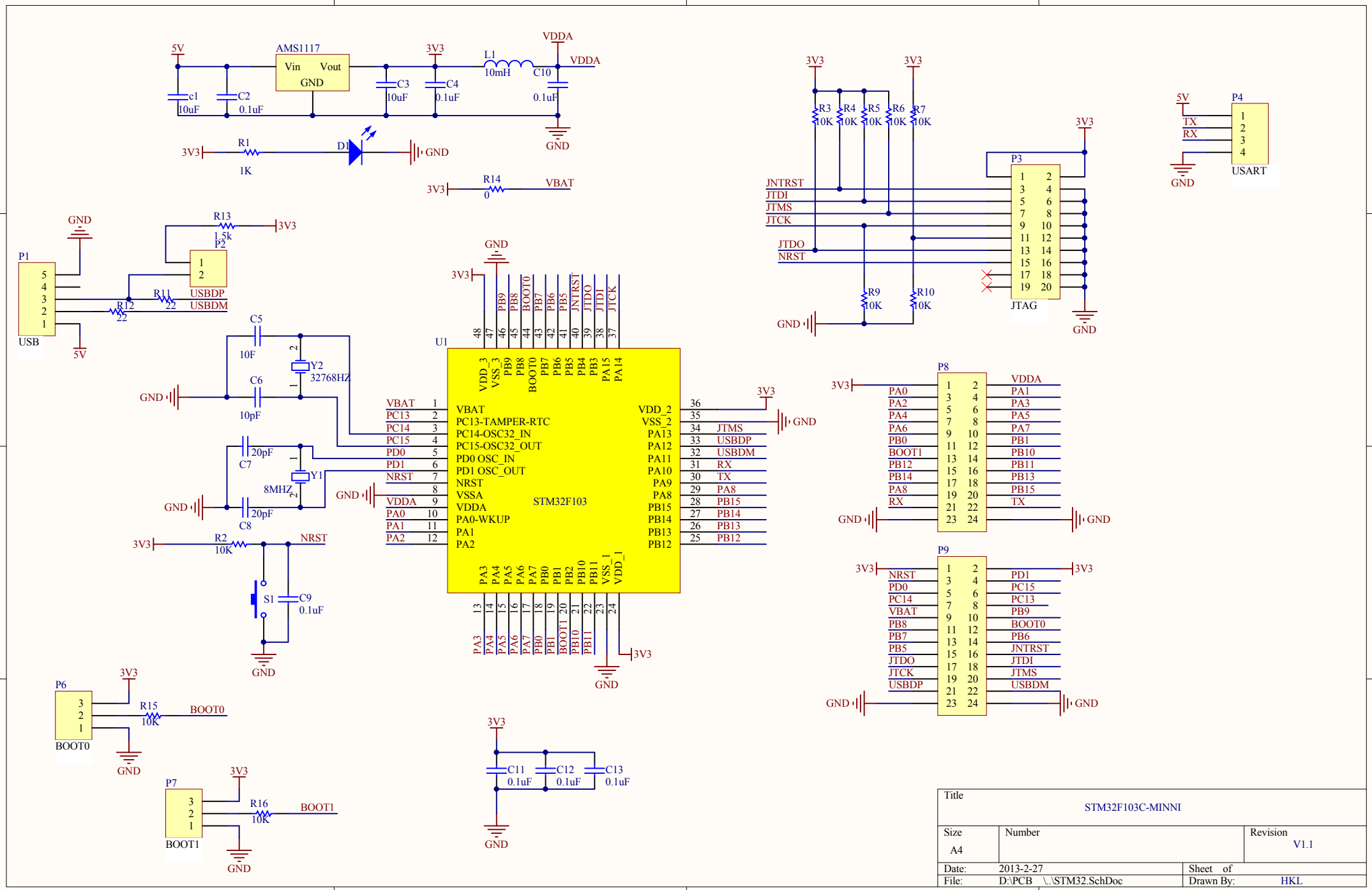

Title		
STM32F103C-MINNI		
Size A4	Number	Revision V1.1
Date: 2013-2-27		Sheet of
File: D:\PCB \..\STM32.SchDoc		Drawn By: HKL