IF2240 – Basis Data

Formal Relational Query Language

©2026 - Tim Pengajar IF2240 Semester II TA 2025/2026

KNOWLEDGE & SOFTWARE ENGINEERING

Schema Diagram for University Database

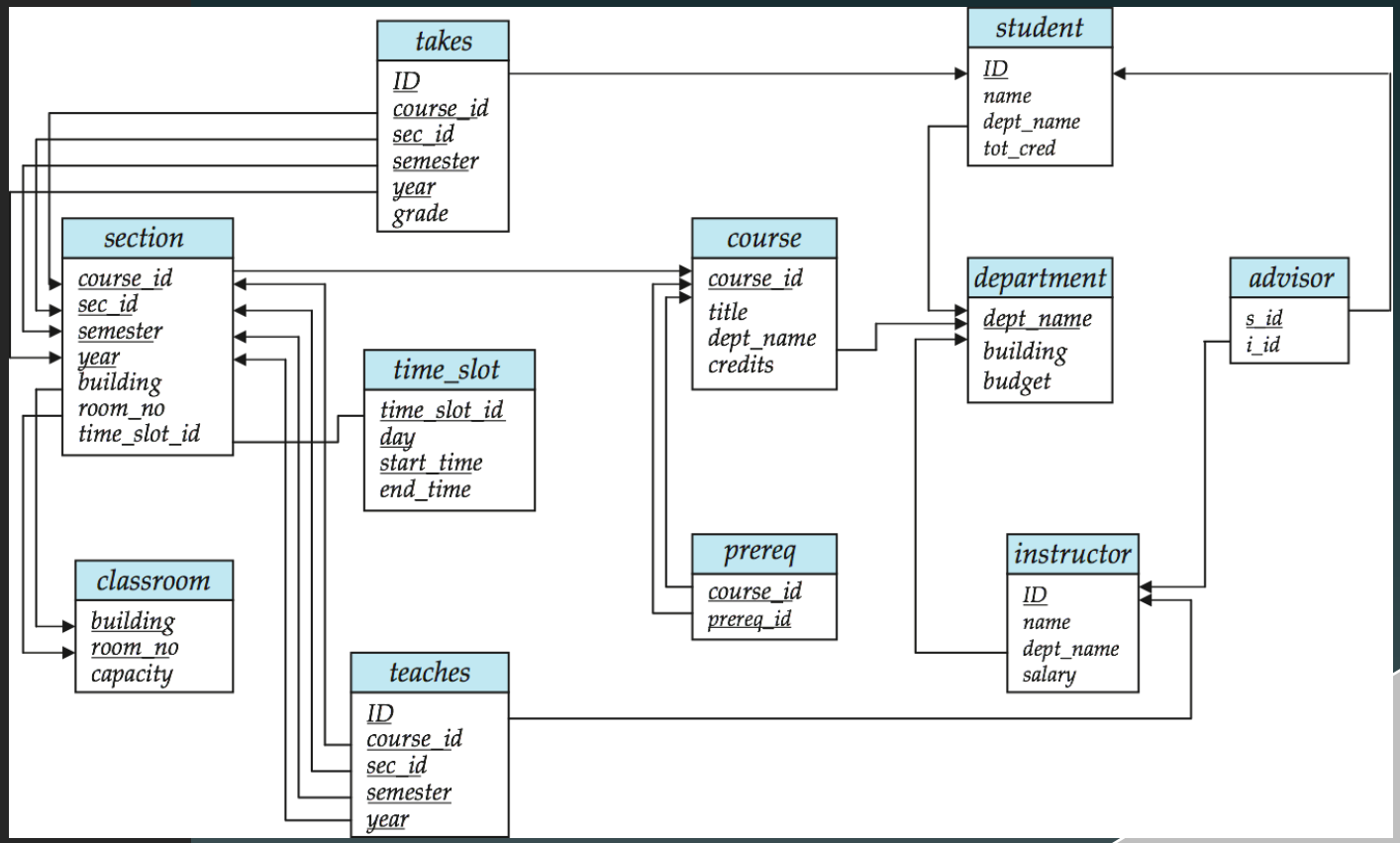

Relational Algebra

Procedural language

Six basic operators

- select: σ
- project: Π
- union: $\cup$
- set difference: $-$
- cartessian product: $\times$
- rename: ρ

The operators take one or two relations as inputs and produce a new relation as a result.

- Additional Operators
  - Intersection: $\cap$
  - natural join: $\bowtie$
  - assignment: $\leftarrow$
  - outer join: $⟗$
  - division: $\div$
- Extended Operators
  - generalized projection
  - aggregation

Extended Operations

©2026 - Tim Pengajar IF2240 Pemodelan Basis Data

Generalized Projection

- Notation

$$\Pi_{F1, F2, \ldots, Fn}(E)$$

E is any relational-algebra expression
Each of $F_1, F_2, \ldots, F_n$ are arithmetic expressions

- E.g.

Given relation *credit_info(customer_name, limit, credit_balance)*
find how much more each person can spend

$$\Pi_{customer\text{-}name,\ limit\ -\ credit_balance}\ (credit_info)$$

©2026 - Tim Pengajar IF2240 Pemodelan Basis Data

Aggregate Functions and Operations (1)

Aggregate function

- **avg**: average value
- **min**: minimum value
- **max**: maximum value
- **sum**: sum of values
- **count**: number of values

Notation

$$G1, G2, \ldots, Gn\ \mathcal{G}\ F1(A1), F2(A2), \ldots, Fn(An)\ (E)$$

The aggregated values do not have an attribute name; they can be given a name either by using the rename operator **ρ** or for convenience using the following syntax: $\mathcal{G}$ F1(A1) as <atr-name>

©2026 - Tim Pengajar IF2240 Pemodelan Basis Data

Aggregate Functions and Operations – Example 1

R

A	B	C
α	α	7
α	β	7
β	β	3
β	β	10

$\mathcal{G}_{\text{SUM(C)}}(R)$

sum-C
27

©2026 - Tim Pengajar IF2240 Pemodelan Basis Data

Aggregate Functions and Operations – Example 2

INSTRUCTOR (ID, NAME, DEPT_NAME, SALARY)

ID	name	dept_name	salary
76766	Crick	Biology	72000
45565	Katz	Comp. Sci.	75000
10101	Srinivasan	Comp. Sci.	65000
83821	Brandt	Comp. Sci.	92000
98345	Kim	Elec. Eng.	80000
12121	Wu	Finance	90000
76543	Singh	Finance	80000
32343	El Said	History	60000
58583	Califieri	History	62000
15151	Mozart	Music	40000
22222	Einstein	Physics	95000
33456	Gold	Physics	87000

DEPT_NAME $\mathcal{G}$ AVG(SALARY) (INSTRUCTOR)

dept_name	avg-salary
Biology	72000
Comp. Sci.	77333
Elec. Eng.	80000
Finance	85000
History	61000
Music	40000
Physics	91000

©202

Data Modifications

©2026 - Tim Pengajar IF2240 Pemodelan Basis Data

Deletion

Notation

$$r \leftarrow r - E$$

Example

prereq (course_id, prereq_id)

Delete all prerequisites of course "IF2240"

$$prereq \leftarrow prereq - \sigma_{course_id = \text{"IF2240"}} (prereq)$$

©2026 - Tim Pengajar IF2240 Pemodelan Basis Data

Deletion Examples

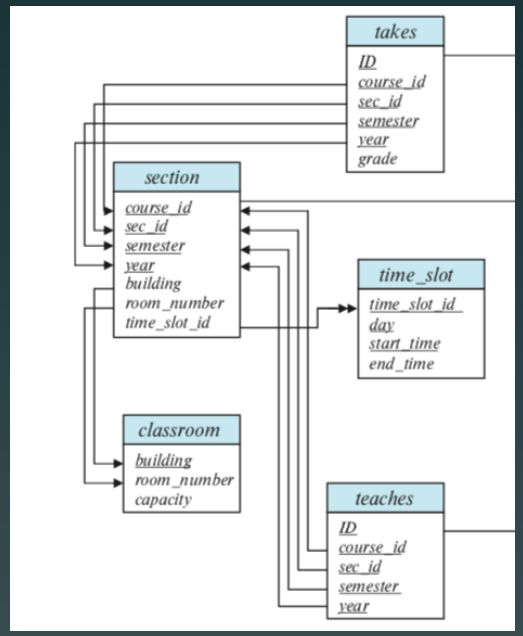

@Silberschatz et.al. (2020)

Delete the study plan of student with ID "13518000" for 1-2019 semester.

$$takes \leftarrow takes - \sigma_{ID="13518000" \wedge sem=1 \wedge year=2019}(takes)$$

Delete all sections that was taught by instructor with ID "132132132" for 2-2019 semester.

$$r_1 \leftarrow \sigma_{ID = "132132132" \wedge sem=2 \wedge year=2019}(teaches)$$

$$r_2 \leftarrow \Pi_{course_id,\ sec_id,\ sem,\ year}(r_1) \bowtie takes$$

$$r_3 \leftarrow \Pi_{course_id,\ sec_id,\ sem,\ year}(r_1) \bowtie section$$

$$teaches \leftarrow teaches - r_1$$

$$takes \leftarrow takes - r_2$$

$$section \leftarrow section - r_3$$

Insertion

Types

1. specify a tuple to be inserted
2. write a query whose result is a set of tuples to be inserted

Notation

$$r \leftarrow r \cup E$$

©2026 - Tim Pengajar IF2240 Pemodelan Basis Data

Insertion – Example 1

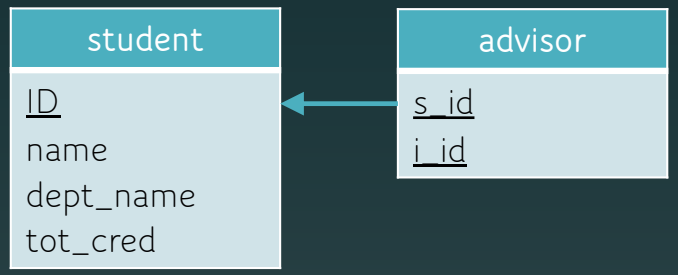

Insert information in the database specifying that a transfer student, Abdul, with ID 13518600 was enrolled to Comp. Sci. department with 36 total credit transfer and instructor 132132132 as his advisor.

$$student \leftarrow student \cup \{(13518600, \text{“Abdul”}, \text{“Comp. Sci.”}, 36)\}$$

$$advisor \leftarrow advisor \cup \{(13518600, 132132132)\}$$

Insertion – Example 2

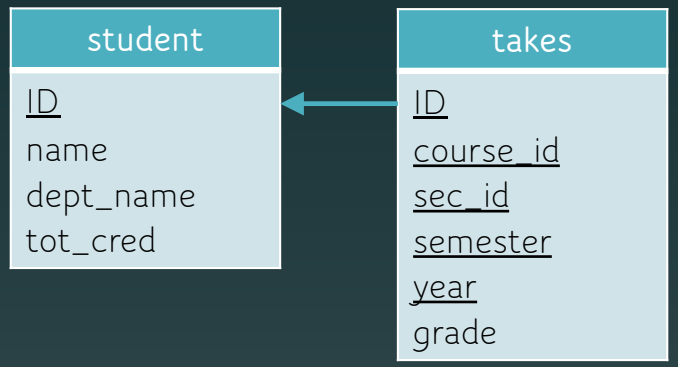

All students from Comp. Sci. dept with less than 130 total credits are automatically enrolled to course IF4000 in 2-2019 semester (evenly distributed to 3 available section IDs: 1, 2, 3)

$$r_1 \leftarrow \sigma_{dept_name = \text{"Comp.Sci."} \wedge tot_cred < 130}(student)$$

$$takes \leftarrow takes \cup \Pi_{ID,\ \text{"IF4000"},\ ((ID-1) \bmod 3)+1,\ 2,\ 2019,\ null}(r_1)$$

Updating

Use the generalized projection operator to do this task

$$r \leftarrow \Pi_{F1, F2, \ldots, Fn}(r)$$

Each F_i is either

- the ith attribute of r, if the ith attribute is not updated, or,
- if the attribute is to be updated F_i is an expression, involving only constants and the attributes of r, which gives the new value for the attribute

©2026 - Tim Pengajar IF2240 Pemodelan Basis Data

Update Examples

instructor
ID
name
dept_name
salary

Give a 5% salary raise to all instructors.

$$instructor \leftarrow \Pi_{ID,\ name,\ dept_name,\ salary * 1.05}\ (instructor)$$

Give a 5% salary raise to those instructors who earn less than 70000.

$$instructor \leftarrow \Pi_{ID,\ name,\ dept_name,\ salary * 1.05}\ (\sigma_{salary\ <\ 70000}\ (instructor))$$

$$\cup\ \sigma_{salary \geq 70000}\ (instructor)$$

Increase salaries of instructors whose salary is over $70,000 by 3%, and all others receive a 5% raise.

$$instructor \leftarrow \Pi_{ID,\ name,\ dept_name,\ salary * 1.05}\ (\sigma_{salary \leq 70000}\ (instructor))$$

$$\cup\ \Pi_{ID,\ name,\ dept_name,\ salary * 1.03}\ (\sigma_{salary\ >\ 70000}\ (instructor))$$

©2026 - Tim Pengajar IF2240 Pemodelan Basis Data