IF2240 – Basis Data

SQL (Part 3)

©2026 - Tim Pengajar IF2240 Basis Data

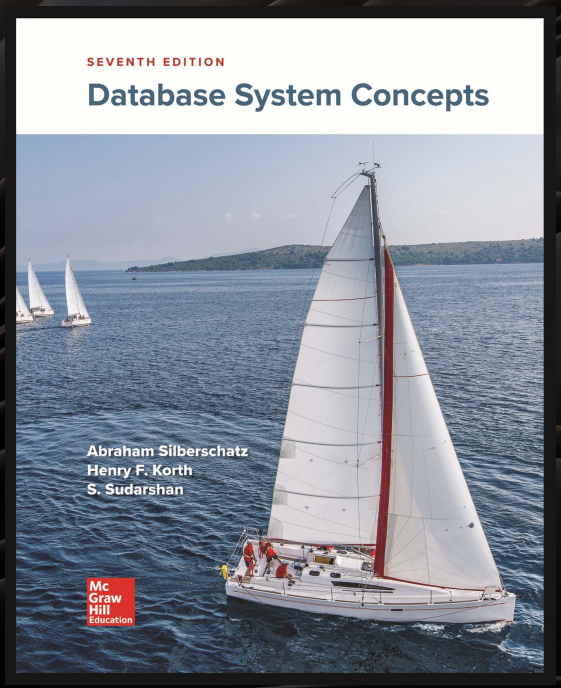

Sumber

Silberschatz, Korth, Sudarshan: "Database System Concepts", 7th Edition

- Chapter 3 : Introduction to SQL
- Chapter 4 : Intermediate SQL

KNOWLEDGE & SOFTWARE ENGINEERING

Schema Diagram

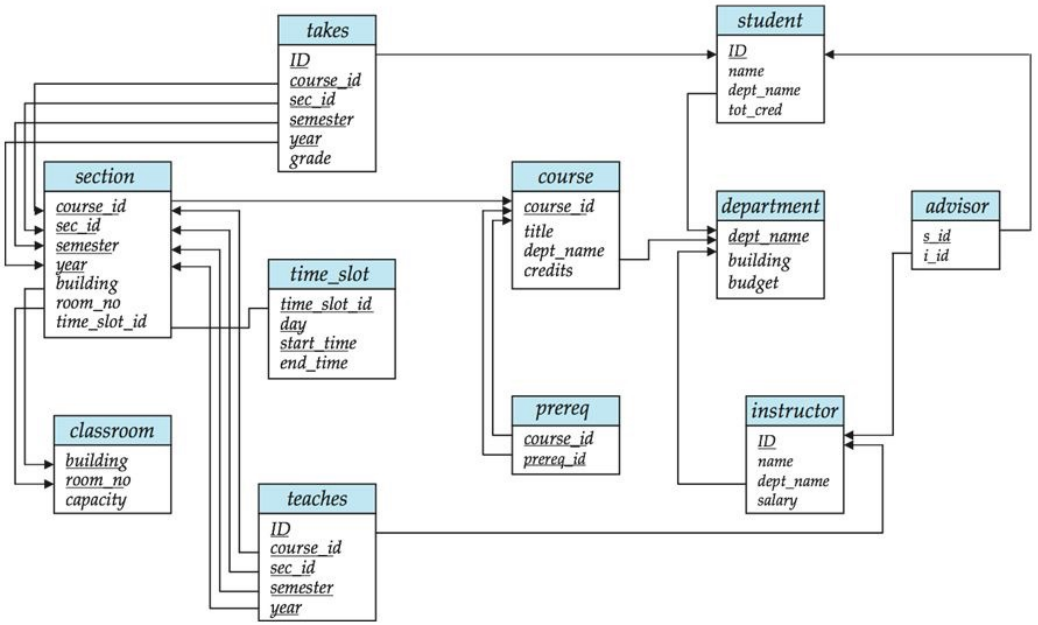

Nested Subqueries

SQL provides a mechanism for the nesting of subqueries. A **subquery** is a **select-from-where** expression that is nested within another query.

The nesting can be done in the following SQL query

select $A_1, A_2, \ldots, A_n$
from $r_1, r_2, \ldots, r_m$
where P

as follows:

- **Where clause:** P can be replaced with an expression of the form:

  B <operation> (subquery)

  B is an attribute and <operation> to be defined later.
- **From clause:** r_i can be replaced by any valid subquery
- **Select clause:**

  A_i can be replaced be a subquery that generates a single value.

©2026 - Tim Pengajar IF2240 Basis Data

Nested Query in Where Clause

- Set Membership (IN): to check whether an attribute value is a member of the result set produced by a subquery.
- Set Comparison (<relational operator> SOME/ALL): to evaluate whether an attribute value satisfies the <relational operator> condition against some or all tuples in the subquery result.
- Test of Empty Relation (EXISTS): to determine whether a subquery returns any tuples (i.e., whether the subquery produces a result).
- Test for Absence of Duplicates (UNIQUE): to check whether the tuples in the subquery result are unique (i.e., no duplicate values exist).

©2026 - Tim Pengajar IF2240 Basis Data
KNOWLEDGE & SOFTWARE ENGINEERING

Set Membership

Find courses offered in Fall 2017 and in Spring 2018

```
select distinct course_id
from section
where semester = 'Fall' and year= 2017 and
        course_id in (select course_id
                      from section
                      where semester = 'Spring' and year= 2018);
```

Find courses offered in Fall 2017 but not in Spring 2018

```
select distinct course_id
from section
where semester = 'Fall' and year= 2017 and
        course_id  not in (select course_id
                           from section
                           where semester = 'Spring' and year= 2018);
```


©2026 - Tim Pengajar IF2240 Basis Data

Set Membership (Cont.)

Name all instructors whose name is neither "Mozart" nor Einstein"

```
select distinct name
from instructor
where  name not in ('Mozart', 'Einstein')
```

Find the total number of (distinct) students who have taken course sections taught by the instructor with *ID* 10101

```
select count (distinct ID)
from takes
where (course_id, sec_id, semester, year) in
                (select course_id, sec_id, semester, year
                 from teaches
                 where teaches.ID= 10101);
```

Note: Above query can be written in a much simpler manner.
The formulation above is simply to illustrate SQL features

©2026 - Tim Pengajar IF2240 Basis Data

Set Comparison – "some" Clause

Find names of instructors with salary greater than that of some (at least one) instructor in the Biology department.

```
select distinct T.name
from instructor as T, instructor as S
where T.salary > S.salary and S.dept name = 'Biology';
```

Same query using > **some** clause

```
select name
from instructor
where salary > some (select salary
                     from instructor
                     where dept name = 'Biology');
```


©2026 - Tim Pengajar IF2240 Basis Data

Definition of "some" Clause

F <comp> **some** $r \Leftrightarrow \exists\ t \in r$ such that (F <comp> t)
Where <comp> can be: $<$, $\leq$, $>$, $=$, $\neq$

(5 < **some** | 0 | 5 | 6 |) = true (read: 5 < some tuple in the relation)

(5 < **some** | 0 | 5 |) = false

(5 = **some** | 0 | 5 |) = true

(5 ≠ **some** | 0 | 5 |) = true (since 0 ≠ 5)

(= **some**) ≡ **in**
However, (≠ **some**) ≡ **not in**

©2026 - Tim Pengajar IF2240 Basis Data

Set Comparison – “all” Clause

Find the names of all instructors whose salary is greater than the salary of all instructors in the Biology department.

```
select name
from instructor
where salary > all (select salary
                    from instructor
                    where dept name = 'Biology');
```


©2026 - Tim Pengajar IF2240 Basis Data

Definition of "all" Clause

F <comp> **all** $r \Leftrightarrow \forall\, t \in r$ (F <comp> t)

(5 < **all** $\begin{array}{|c|}\hline 0 \\ \hline 5 \\ \hline 6 \\ \hline\end{array}$) = false

(5 < **all** $\begin{array}{|c|}\hline 6 \\ \hline 10 \\ \hline\end{array}$) = true

(5 = **all** $\begin{array}{|c|}\hline 4 \\ \hline 5 \\ \hline\end{array}$) = false

(5 ≠ **all** $\begin{array}{|c|}\hline 4 \\ \hline 6 \\ \hline\end{array}$) = true (since 5 ≠ 4 and 5 ≠ 6)

(≠ **all**) ≡ **not in**
However, (= **all**) ≢ **in**

©2026 - Tim Pengajar IF2240 Basis Data

Test for Empty Relations

The **exists** construct returns the value **true** if the argument subquery is nonempty.

exists $r \Leftrightarrow r \neq \emptyset$

not exists $r \Leftrightarrow r = \emptyset$

©2026 - Tim Pengajar IF2240 Basis Data

Use of "exists" Clause

Yet another way of specifying the query "Find all courses taught in both the Fall 2017 semester and in the Spring 2018 semester"

```
select course_id
from section as S
where semester = 'Fall' and year = 2017 and
        exists  (select *
                 from section as T
                 where semester = 'Spring' and year= 2018
                       and S.course_id = T.course_id);
```

Correlation name – variable S in the outer query

Correlated subquery – the inner query

©2026 - Tim Pengajar IF2240 Basis Data

Use of "not exists" Clause

Find all students who have taken all courses offered in the Biology department.

```
select distinct S.ID, S.name
from student as S
where not exists ( (select course_id
                    from course
                    where dept_name = 'Biology')
                   except
                    (select T.course_id
                     from takes as T
                     where S.ID = T.ID));
```

- First nested query lists all courses offered in Biology
- Second nested query lists all courses a particular student took

Note that $X - Y = \emptyset \quad \Leftrightarrow \quad X \subseteq Y$

Note: Cannot write this query using = all and its variants

©2026 - Tim Pengajar IF2240 Basis Data

Test for Absence of Duplicate Tuples

The **unique** construct tests whether a subquery has any duplicate tuples in its result.

The **unique** construct evaluates to "true" if a given subquery contains no duplicates .

Find all courses that were offered at most once in 2017

```
select T.course_id
from course as T
where unique ( select R.course_id
                 from section as R
                 where T.course_id= R.course_id
                       and R.year = 2017);
```


©2026 - Tim Pengajar IF2240 Basis Data

Subqueries in the From Clause

SQL allows a subquery expression to be used in the **from** clause

Find the average instructors' salaries of those departments where the average salary is greater than $42,000."

```
select dept_name, avg_salary
from ( select dept_name, avg (salary) as avg_salary
         from instructor
         group by dept_name)
where avg_salary > 42000;
```

Note that we do not need to use the **having** clause

Another way to write above query

```
select dept_name, avg_salary
from ( select dept_name, avg (salary)
         from instructor
         group by dept_name)
          as dept_avg (dept_name, avg_salary)
 where avg_salary > 42000;
```


©2026 - Tim Pengajar IF2240 Basis Data

With Clause

The **with** clause provides a way of defining a temporary relation whose definition is available only to the query in which the **with** clause occurs.

Find all departments with the maximum budget

```
with max_budget (value) as
        (select max(budget)
         from department)
select department.name
from department, max_budget
where department.budget = max_budget.value;
```


©2026 - Tim Pengajar IF2240 Basis Data

Complex Queries using With Clause

Find all departments where the total salary is greater than the average of the total salary at all departments

```
with dept _total (dept_name, value) as
      (select dept_name, sum(salary)
       from instructor
       group by dept_name),
dept_total_avg(value) as
     (select avg(value)
     from dept_total)
select dept_name
from dept_total, dept_total_avg
where dept_total.value > dept_total_avg.value;
```


©2026 - Tim Pengajar IF2240 Basis Data

Scalar Subquery

Scalar subquery is one which is used where a single value is expected

List all departments along with the number of instructors in each department

```
select dept_name,
        ( select count(*)
          from instructor
          where department.dept_name = instructor.dept_name)
        as num_instructors
from department;
```

Runtime error if subquery returns more than one result tuple

©2026 - Tim Pengajar IF2240 Basis Data