1. ALL RESISTANCE VALUES ARE IN OHMS, 0.1 WATT +/- 5%.
2. ALL CAPACITANCE VALUES ARE IN MICROFARADS.
3. ALL CRYSTALS & OSCILLATOR VALUES ARE IN HERTZ.

REV	ECN	DESCRIPTION OF REVISION	CK APPD / DATE
9	0008409760	ENGINEERING RELEASED	2017-04-05

X891/X893 MLB Top: EVT

LAST_MODIFICATION=Mon Apr 3 13:03:06 2017

PAGE	CSA	CONTENTS	SYNC	DATE
1	1	TABLE OF CONTENTS		
2	2	SYSTEM:BOM Tables	test_mlb	10/13/2016
3	4	SYSTEM: Mechanical Components		
4	5	SYSTEM: Testpoints (Top)	test_mlb	10/13/2016
5	6	BOOTSTRAPPING	test_mlb	10/13/2016
6	10	SOC: JTAG,USB,XTAL	test_mlb	10/17/2016
7	11	SOC: PCIE	test_mlb	10/17/2016
8	12	SOC: MIPI & ISP	test_mlb	10/13/2016
9	13	SOC: LPDP	test_mlb	10/13/2016
10	14	SOC: Serial	test_mlb	10/17/2016
11	15	SOC: GPIO & UART	test_mlb	10/13/2016
12	16	SOC: AOP	test_mlb	10/17/2016
13	17	SOC: Power (1/3)	test_mlb	10/17/2016
14	18	SOC: Power (2/3)	test_mlb	10/17/2016
15	19	SOC: Power (3/3)	test_mlb	10/17/2016
16	26	NAND	test_mlb	10/13/2016
17	27	SYSTEM POWER: PMU Bucks (1/4)	test_mlb	10/13/2016
18	28	SYSTEM POWER: PMU Bucks (2/4)	test_mlb	10/13/2016
19	29	SYSTEM POWER: PMU LDOs (3/4)	test_mlb	10/13/2016
20	30	SYSTEM POWER: PMU (4/4)	test_mlb	11/01/2016
21	31	SYSTEM POWER: Boost	test_mlb	10/13/2016
22	32	SYSTEM POWER: B2B Battery	test_mlb	10/13/2016
23	33	SYSTEM POWER: Charger	test_mlb	10/13/2016
24	34	SYSTEM POWER: Iktara		
25	35	SYSTEM POWER: B2B Cyclone + Button	test_mlb	10/13/2016
26	36	SENSORS	test_mlb	10/13/2016
27	37	CAMERA: PMU (1/2)	test_mlb	10/13/2016
28	38	CAMERA: PMU (2/2)	test_mlb	10/13/2016
29	39	CAMERA: B2B Wide (WY)	test_mlb	10/13/2016
30	40	CAMERA: B2B Tele (MT)	test_mlb	10/13/2016
31	41	CAMERA: Strobe Drivers	test_mlb	10/13/2016
32	42	CAMERA: B2B FCAM	test_mlb	10/13/2016
33	43	CAMERA: B2B Strobe + Hold Button	test_mlb	10/13/2016
34	44	PEARL: Power	test_mlb	10/13/2016
35	45	PEARL: B2B Romeo + Juliet	test_mlb	10/13/2016
36	46	PEARL: B2B Rosaline + Misc	test_mlb	10/13/2016
37	47	AUDIO: CODEC (1/2)	test_mlb	10/13/2016
38	48	AUDIO: CODEC (2/2)	test_mlb	10/13/2016
39	49	AUDIO: Speaker Amp Bottom		08/25/2015
40	50	AUDIO: Speaker Amp Top		08/25/2015
41	51	ARC: Driver	test_mlb	10/13/2016
42	56	CG: Power Supplies - Touch & Display	test_mlb	10/13/2016
43	57	CG: B2B Display	test_mlb	10/13/2016
44	58	CG: B2B Orb & Touch		08/25/2015
45	59	I/O: Overvoltage Cut-Off Circuit	sync	01/10/2017
46	61	I/O: Accessory Buck	test_mlb	10/17/2016
47	62	I/O: USB PD	test_mlb	10/13/2016
48	63	I/O: Hydra	test_mlb	10/13/2016
49	64	I/O: B2B Dock	test_mlb	10/13/2016
50	65	I/O: Interposer (Bottom)	test_mlb	10/13/2016
51	80	RADIOS		06/04/2015

BOM:639-04583 (Ultimate)
BOM:639-03409 (Extreme)
MCO:056-04077

PART#	QTY	DESCRIPTION	REFERENCE DESIGNATOR(S)	CRITICAL	BOM OPTION
051-02221	1	SCH,MLB_TOP,X891	SCH	NO	COMMON
820-00863	1	PCB,MLB_TOP,X891	PCB	NO	COMMON

TABLE OF CONTENTS

DRAWING TITLE: SCH,MLB,TOP,X891

Apple Inc.

DRAWING NUMBER: 051-02221 SIZE: D
REVISION: 9.0.0
BRANCH: evt-1
PAGE: 1 OF 80
SHEET: 1 OF 51

NOTICE OF PROPRIETARY PROPERTY:
THE INFORMATION CONTAINED HEREIN IS THE PROPRIETARY PROPERTY OF APPLE INC.
THE POSESSOR AGREES TO THE FOLLOWING:
I TO MAINTAIN THIS DOCUMENT IN CONFIDENCE
II NOT TO REPRODUCE OR COPY IT
III NOT TO REVEAL OR PUBLISH IT IN WHOLE OR PART
IV ALL RIGHTS RESERVED

EEEE Codes

PART#	QTY	DESCRIPTION	REFERENCE DESIGNATOR(S)	CRITICAL	BOM OPTION
825-7691	1	EEEE FOR (MLB_TOP,639-04583,ULTIMATE)	EEEE_J2WJ	NO	ULTIMATE
825-7691	1	EEEE FOR (MLB_TOP,639-03409,EXTREME)	EEEE_HP26	NO	EXTREME

SOC

PART#	QTY	DESCRIPTION	REFERENCE DESIGNATOR(S)	CRITICAL	BOM OPTION
339S00358	1	SKYE+3GB, B0, M, DEV	U1000	CRITICAL	COMMON

PART NUMBER	ALTERNATE FOR PART NUMBER	BOM OPTION	REF DES	COMMENTS:
339S00359	339S00358	BOM_TABLE_ALTS	U1000	DDR-H,3G, B0
339S00360	339S00358	BOM_TABLE_ALTS	U1000	DDR-S-20,3G, B0
339S00361	339S00358	BOM_TABLE_ALTS	U1000	DDR-S-18,3G, B0

NAND

Ultimate

PART#	QTY	DESCRIPTION	REFERENCE DESIGNATOR(S)	CRITICAL	BOM OPTION
335S00287	1	HYNIX, 3DV3, ULTIMATE	U2600	CRITICAL	ULTIMATE

PART NUMBER	ALTERNATE FOR PART NUMBER	BOM OPTION	REF DES	COMMENTS:
335S00284	335S00287	BOM_TABLE_ALTS	U2600	TOSHIBA, 1Z, ULTIMATE
335S00285	335S00287	BOM_TABLE_ALTS	U2600	TOSHIBA, BICS3, ULTIMATE
335S00286	335S00287	BOM_TABLE_ALTS	U2600	SANDISK, BICS3, ULTIMATE
335S00288	335S00287	BOM_TABLE_ALTS	U2600	SAMSUNG, 3DV4, ULTIMATE

Extreme

PART#	QTY	DESCRIPTION	REFERENCE DESIGNATOR(S)	CRITICAL	BOM OPTION
335S00240	1	HYNIX, 3DV3, EXTREME	U2600	CRITICAL	EXTREME

PART NUMBER	ALTERNATE FOR PART NUMBER	BOM OPTION	REF DES	COMMENTS:
335S00228	335S00240	BOM_TABLE_ALTS	U2600	TOSHIBA, BICS3, EXTREME
335S00247	335S00240	BOM_TABLE_ALTS	U2600	SANDISK, BICS3, EXTREME
335S00276	335S00240	BOM_TABLE_ALTS	U2600	SAMSUNG, 3DV4, EXTREME

Global Capacitors

PART NUMBER	ALTERNATE FOR PART NUMBER	BOM OPTION	REF DES	COMMENTS:
138S00148	138S00149	BOM_TABLE_ALTS	ALL	0402-3T,10.5uF@1V, Kyocera
138S00150	138S00149	BOM_TABLE_ALTS	ALL	0402-3T,10.5uF@1V, SEMCO
138S00151	138S00149	BOM_TABLE_ALTS	ALL	0402-3T,10.5uF@1V, TY

CRITICAL PART#	COMMENT
138S00149	0402-3T,10.5uF@1V

PART NUMBER	ALTERNATE FOR PART NUMBER	BOM OPTION	REF DES	COMMENTS:
138S00143	138S00144	BOM_TABLE_ALTS	ALL	0402,16uF@1V, Kyocera
138S00163	138S00144	BOM_TABLE_ALTS	ALL	0402,16uF@1V, Taiyo

CRITICAL PART#	COMMENT
138S00144	0402,16uF@1V

PART NUMBER	ALTERNATE FOR PART NUMBER	BOM OPTION	REF DES	COMMENTS:
138S00138	138S00139	BOM_TABLE_ALTS	ALL	0201,3uF@1V, Kyocera
138S00164	138S00139	BOM_TABLE_ALTS	ALL	0201,3uF@1V, Taiyo

CRITICAL PART#	COMMENT
138S00139	0201,3uF@1V

PART NUMBER	ALTERNATE FOR PART NUMBER	BOM OPTION	REF DES	COMMENTS:
138S00145	138S00146	BOM_TABLE_ALTS	ALL	0402,5.1uF@3V, Kyocera
138S00165	138S00146	BOM_TABLE_ALTS	ALL	0402,5.1uF@3V, Taiyo

CRITICAL PART#	COMMENT
138S00146	0402,5.1uF@3V

PART NUMBER	ALTERNATE FOR PART NUMBER	BOM OPTION	REF DES	COMMENTS:
138S00140	138S00141	BOM_TABLE_ALTS	ALL	0201,1.1uF@3V, Kyocera
138S00142	138S00141	BOM_TABLE_ALTS	ALL	0201,1.1uF@3V, SEMCO
138S00166	138S00141	BOM_TABLE_ALTS	ALL	0201,1.1uF@3V, Taiyo

CRITICAL PART#	COMMENT
138S00141	0201,1.1uF@3V

Global Ferrites

PART NUMBER	ALTERNATE FOR PART NUMBER	BOM OPTION	REF DES	COMMENTS:
155S00194	155S0610	BOM_TABLE_ALTS	ALL	FERR BD, 1500HM, TDK
155S00200	155S0610	BOM_TABLE_ALTS	ALL	FERR BD, 1500HM, TY

CRITICAL PART#	COMMENT
155S0610	FERR BD, 1500HM, 01005

Global R/C Alternates

PART NUMBER	ALTERNATE FOR PART NUMBER	BOM OPTION	REF DES	COMMENTS:
118S0764	118S0717	BOM_TABLE_ALTS	ALL	RES, 3.92K, 0.1%, 0201
138S0648	138S0652	BOM_TABLE_ALTS	ALL	CAP,X5R,4.7UF,6.3V,0.65MM,0402,TAIYO
138S0739	138S0706	BOM_TABLE_ALTS	ALL	CAP,CER,X5R,0.22UF,20%,6.3V,20%
132S0436	132S0400	BOM_TABLE_ALTS	ALL	CAP,CER,X5R,0.22UF,20%,6.3V,01005
138S00049	138S0831	BOM_TABLE_ALTS	ALL	CAP,CER,X5R,2.2UF,20%,6.3V,0201

CRITICAL PART#	COMMENT
118S0717	RES, 3.92K, 0.1%, 0201
138S0652	CAP,X5R,4.7UF,6.3V,0.65MM,0402
138S0706	CAP,CER,X5R,0.22UF,20%,6.3V,20%
132S0400	CAP,CER,X5R,0.22UF,20%,6.3V,01005
138S0831	CAP,CER,X5R,2.2UF,20%,6.3V,0201

Global Inductors

PART NUMBER	ALTERNATE FOR PART NUMBER	BOM OPTION	REF DES	COMMENTS:
152S00710	152S00617	BOM_TABLE_ALTS	ALL	IND,MLD,0.1UH,20%,6.1A,29MOHM,H=.65,1608
152S00712	152S00620	BOM_TABLE_ALTS	ALL	IND,MLD,0.1UH,20%,7.2A,17MOHM,H=0.8,2012
152S00713	152S00621	BOM_TABLE_ALTS	ALL	IND,MLD,0.47UH,20%,3.5A,53MO,H=.65,2012
152S00714	152S00622	BOM_TABLE_ALTS	ALL	IND,MLD,1.0UH,20%,2.1A,160MO,H=.65,2012
152S00716	152S00626	BOM_TABLE_ALTS	ALL	IND,MLD,1.5UH,20%,1.1A,160MO,H=.65,2012
152S00717	152S00631	BOM_TABLE_ALTS	ALL	IND,MLD,1.0UH,20%,2.5A,78MO,H=0.8,2012
152S00718	152S00632	BOM_TABLE_ALTS	ALL	IND,MLD,1.0UH,20%,3.2A,60MO,H=0.8,2016
152S00720	152S00640	BOM_TABLE_ALTS	ALL	IND,MLD,0.47UH,3.8A,55MO,H=0.65MM,2012
152S00721	152S00641	BOM_TABLE_ALTS	ALL	IND,MLD,0.47UH,4A,48MO,H=0.8MM,2012
152S00715	152S00623	BOM_TABLE_ALTS	ALL	IND,MLD,1UH,3.6A,60MO,H=0.8MM,2016
152S00653	152S00651	BOM_TABLE_ALTS	ALL	IND,1.2UH,3A,2016,0.65Z
152S00649	152S00650	BOM_TABLE_ALTS	L3340,L3341	IND,0.47UH,6.6A,3225,0.8Z

CRITICAL PART#	COMMENT
152S00617	IND,MLD,0.1UH,20%,6.1A,29MOHM,H=.65,1608
152S00620	IND,MLD,0.1UH,20%,7.2A,17MOHM,H=0.8,2012
152S00621	IND,MLD,0.47UH,20%,3.5A,53MO,H=.65,2012
152S00622	IND,MLD,1.0UH,20%,2.1A,160MO,H=.65,2012
152S00626	IND,MLD,1.5UH,20%,1.1A,160MO,H=.65,2012
152S00631	IND,MLD,1.0UH,20%,2.5A,78MO,H=0.8,2012
152S00632	IND,MLD,1.0UH,20%,3.2A,60MO,H=0.8,2016
152S00640	IND,MLD,0.47UH,3.8A,55MO,H=0.65MM,2012
152S00641	IND,MLD,0.47UH,4A,48MO,H=0.8MM,2012
152S00623	IND,MLD,1UH,3.6A,60MO,H=0.8MM,2016
152S00651	IND,1.2UH, 3A, 2016, 0.65Z
152S00650	IND,0.47UH,6.6A,3225,0.8Z

XTAL Alternate

PART NUMBER	ALTERNATE FOR PART NUMBER	BOM OPTION	REF DES	COMMENTS:
197S0612	197S0446	BOM_TABLE_ALTS	Y1000	XTAL, 24M, 1612

CRITICAL PART#	COMMENT
197S0446	XTAL, 24M, 1612

Multi-Vendor Criticals

CRITICAL PART#	COMMENT
377S0106	SUPPR,TRANS,VARISTOR,12V,33PF,01005
197S0446	XTAL,24MHZ,30PPM,9.5PF,60 OHM MAX,1612
155S0576	FERR BD,10 OHM,50%,750MA,0.07 DCR,01005
155S00168	FLTR,NOISE,65 OHMZ,3.4OHM,0.7-2GHZ,0605
138S0979	CAP,CER,X5R,10UF,20%,10V,0402,H=0.65MM
138S0692	CAP,CER,X5R,1UF,20%,6.3V,0201
138S0683	CAP,CER,X5R,1UF,10%,25V,0402
138S0652	CAP,CER,X5R,4.7UF,20%,6.3V,H=0.65MM,0402
138S00070	CAP,X5R,4.7UF,20%,25V,0402
138S00014	CAP,CER,1UF,20%,16V,X5R,0201,H=0.39MM
132S0664	CAP,CER,0.047UF,10%,25V,X5R,0201
132S0663	CAP,CER,X5R,1UF,10%,25V,0402
132S0534	CAP,CER,X5R,0.1UF,10%,25V,0201
132S0436	CAP,CER,X5R,0.22UF,20%,6.3V,01005
132S0396	CAP,CER,X5R,1000PF,10%,10V,01005
132S0316	CAP,CER,X5R,0.1UF,20%,6.3V,01005
132S0304	CAP,CER,X5R,0.22UF,20%,6.3V,0201
132S0296	CAP,CER,X5R,1000PF,10%,6.3V,01005
132S0318	CAP,CER,X5R,820PF,10%,10V,01005

CRITICAL PART#	COMMENT
132S0288	CAP,CER,X5R,0.1UF,10%,16V,0201
132S0275	CAP,CER,X5R,470PF,10%,10V,01005
132S0249	CAP,CER,X7R,220PF,10%,10V,01005
132S0245	CAP,CER,X5R,0.01UF,10%,6.3V,01005
132S00093	CAP,X5R,0.022UF,20%,6.3V,01005
132S00025	CAP,CER,X5R,0.047UF,20%,6.3V,01005
132S00008	CAP,CER,0.1UF,10%,50V,X7R,0402
131S0883	CAP,CER,NP0/C0G,220PF,2%,50V,0201
131S0804	CAP,CER,27PF,5%,C0G,25V,0201
131S0307	CAP,CER,NP0/C0G,100PF,5%,16V,01005
131S0225	CAP,CER,NP0/C0G,15PF,5%,16V,01005
131S0223	CAP,CER,NP0/C0G,27PF,5%,16V,01005
131S0220	CAP,CER,NP0/C0G,12PF,5%,16V,01005
131S0216	CAP,CER,NP0/C0G,47PF,5%,16V,01005
131S00053	CAP,CER,C0G,220PF,5%,10V,01005
118S00068	RES,MF,1.3 MOHM,1%,200PPM,1/20W,0201
117S0055	RES,MF,1/20W,2M OHM,5,0201,SMD
107S0257	THERMISTOR,NTC,10K OHM,1%,B=3435,01005

Soft-Term Cap Sub BOMs

PART#	QTY	DESCRIPTION	REFERENCE DESIGNATOR(S)	CRITICAL	BOM OPTION
685-00155	1	SUBBOM,MLB,TOP,CAP,TYPICAL,X891	SUBBOM_CAP	CRITICAL	COMMON

Agnes Input

PART#	QTY	DESCRIPTION	REFERENCE DESIGNATOR(S)	CRITICAL	BOM OPTION
138S00159	4	CAP,SOFT-TERM,2.2UF,6.3V,0201,KYOCERA	C2970,C2971,C2980,C2981	CRITICAL	SOFT_CAP
138S0831	4	CAP,TYPICAL,2.2UF,6.3V,0201,MURATA	C2970,C2971,C2980,C2981	CRITICAL	TYPICAL_CAP

Agnes Output

PART#	QTY	DESCRIPTION	REFERENCE DESIGNATOR(S)	CRITICAL	BOM OPTION
138S00159	9	CAP,SOFT-TERM,2.2UF,6.3V,0201,KYOCERA	C2906,C2961,C2965,C2966,C2967,C2968,C2963,C2963,C2964	CRITICAL	SOFT_CAP
138S0831	9	CAP,TYPICAL,2.2UF,6.3V,0201,MURATA	C2906,C2961,C2965,C2966,C2967,C2968,C2963,C2963,C2964	CRITICAL	TYPICAL_CAP

Sensors

PART#	QTY	DESCRIPTION	REFERENCE DESIGNATOR(S)	CRITICAL	BOM OPTION
138S00159	2	CAP,SOFT-TERM,2.2UF,6.3V,0201,KYOCERA	C3602,C3622	CRITICAL	SOFT_CAP
138S0831	2	CAP,TYPICAL,2.2UF,6.3V,0201,MURATA	C3602,C3622	CRITICAL	TYPICAL_CAP

RCAM B2Bs

PART#	QTY	DESCRIPTION	REFERENCE DESIGNATOR(S)	CRITICAL	BOM OPTION
138S00159	3	CAP,SOFT-TERM,2.2UF,6.3V,0201,KYOCERA	C3909,C3925,C4025	CRITICAL	SOFT_CAP
138S0831	3	CAP,TYPICAL,2.2UF,6.3V,0201,MURATA	C3909,C3925,C4025	CRITICAL	TYPICAL_CAP

Strobe B2B

PART#	QTY	DESCRIPTION	REFERENCE DESIGNATOR(S)	CRITICAL	BOM OPTION
138S00159	1	CAP,SOFT-TERM,2.2UF,6.3V,0201,KYOCERA	C4303	CRITICAL	SOFT_CAP
138S0831	1	CAP,TYPICAL,2.2UF,6.3V,0201,MURATA	C4303	CRITICAL	TYPICAL_CAP

Audio

PART#	QTY	DESCRIPTION	REFERENCE DESIGNATOR(S)	CRITICAL	BOM OPTION
138S00159	2	CAP,SOFT-TERM,2.2UF,6.3V,0201,KYOCERA	C4809,C4805	CRITICAL	SOFT_CAP
138S0831	2	CAP,TYPICAL,2.2UF,6.3V,0201,MURATA	C4809,C4805	CRITICAL	TYPICAL_CAP

Pearl B2B

PART#	QTY	DESCRIPTION	REFERENCE DESIGNATOR(S)	CRITICAL	BOM OPTION
138S00159	1	CAP,SOFT-TERM,2.2UF,6.3V,0201,KYOCERA	C4613	CRITICAL	SOFT_CAP
138S0831	1	CAP,TYPICAL,2.2UF,6.3V,0201,MURATA	C4613	CRITICAL	TYPICAL_CAP

Acorn

PART#	QTY	DESCRIPTION	REFERENCE DESIGNATOR(S)	CRITICAL	BOM OPTION
138S00160	2	CAP,SOFT-TERM,10UF,10V,0402,MURATA	C5641,C5653	CRITICAL	SOFT_CAP
138S0979	2	CAP,TYPICAL,10UF,10V,0402,MUR/KYO	C5641,C5653	CRITICAL	TYPICAL_CAP

CODEC

PART#	QTY	DESCRIPTION	REFERENCE DESIGNATOR(S)	CRITICAL	BOM OPTION
138S00160	2	CAP,SOFT-TERM,10UF,10V,0402,MURATA	C4811,C4808	CRITICAL	SOFT_CAP
138S0979	2	CAP,TYPICAL,10UF,10V,0402,MUR/KYO	C4811,C4808	CRITICAL	TYPICAL_CAP

Ansel

PART#	QTY	DESCRIPTION	REFERENCE DESIGNATOR(S)	CRITICAL	BOM OPTION
138S00160	1	CAP,SOFT-TERM,10UF,10V,0402,MURATA	C3710	CRITICAL	SOFT_CAP
138S0979	1	CAP,TYPICAL,10UF,10V,0402,MUR/KYO	C3710	CRITICAL	TYPICAL_CAP

PART NUMBER	ALTERNATE FOR PART NUMBER	BOM OPTION	REF DES	COMMENTS:
685-00156	685-00155	BOM_TABLE_ALTS	SUBBOM_CAP	SUBBOM,MLB,TOP,CAP,SOFT,X891

PAGE TITLE

SYSTEM:BOM Tables

Apple Inc.

DRAWING NUMBER 051-02221

SIZE D

REVISION 9.0.0

BRANCH evt-1

PAGE 2 OF 80

SHEET 2 OF 51

NOTICE OF PROPRIETARY PROPERTY:
THE INFORMATION CONTAINED HEREIN IS THE PROPRIETARY PROPERTY OF APPLE INC.
THE POSESSOR AGREES TO THE FOLLOWING:
I TO MAINTAIN THIS DOCUMENT IN CONFIDENCE
II NOT TO REPRODUCE OR COPY IT
III NOT TO REVEAL OR PUBLISH IT IN WHOLE OR PART
IV ALL RIGHTS RESERVED

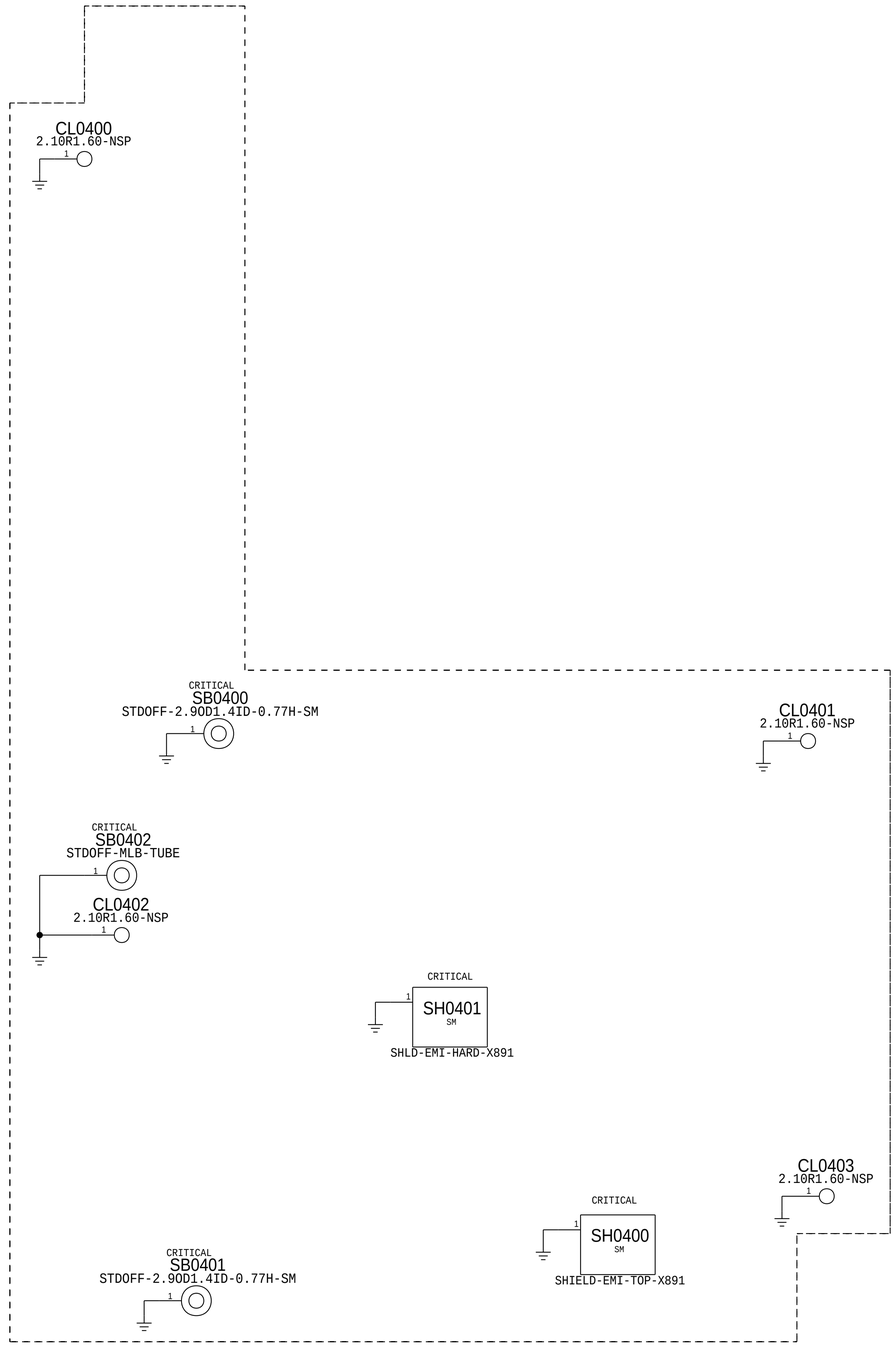

FIDUCIALS

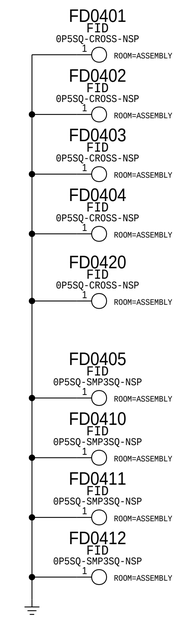

PAGE TITLE
SYSTEM: Mechanical Components

Apple Inc.

DRAWING NUMBER 051-02221
SIZE D
REVISION 9.0.0
BRANCH evt-1
PAGE 4 OF 80
SHEET 3 OF 51

NOTICE OF PROPRIETARY PROPERTY:
THE INFORMATION CONTAINED HEREIN IS THE PROPRIETARY PROPERTY OF APPLE INC.
THE POSESSOR AGREES TO THE FOLLOWING:
I TO MAINTAIN THIS DOCUMENT IN CONFIDENCE
II NOT TO REPRODUCE OR COPY IT
III NOT TO REVEAL OR PUBLISH IT IN WHOLE OR PART
IV ALL RIGHTS RESERVED

Test Points

POWER

PP_ROMEO_DENSE_ANODE	TP0540 P2MM-NSM	ROOM=TEST
PP_ROMEO_CATHODE	TP0543 P2MM-NSM	ROOM=TEST

SOC Debug

AP_TO_PMU_TEST_CLKOUT	PP0500 P2MM-NSM	ROOM=TEST
BOARD_ID0	PP0501 P2MM-NSM	ROOM=TEST
AP_TO_FCAM_SHUTDOWN_L	PP0502 P2MM-NSM	ROOM=TEST
AP_DEBUG3	PP0503 P2MM-NSM	ROOM=TEST
DFU_STATUS	PP0504 P2MM-NSM	ROOM=TEST
PMU_TO_AP_PRE_UVLO_L	PP0505 P2MM-NSM	ROOM=TEST
AP_TO_PMU_SOCHOT_L	PP0506 P2MM-NSM	ROOM=TEST

SOC CPU/GPU

PP_GPU	XW0510 SHORT-10L-0.85MM-SM	PP_GPU_LVCC	
PP_CPU_PCORE	XW0511 SHORT-10L-0.85MM-SM	PP_CPU_PCORE_LVCC	
AP_CPU_PCORE_SENSE		PP0512 P2MM-NSM	ROOM=TEST
AP_VDD_GPU_SENSE		PP0513 P2MM-NSM	ROOM=TEST
TP_SOC_SENSE		PP0514 P2MM-NSM	ROOM=TEST
TP_VSS_CPU_SENSE		PP0515 P2MM-NSM	ROOM=TEST
TP_VSS_SENSE		PP0516 P2MM-NSM	ROOM=TEST

PMU

AOP_TO_DDR_SLEEP1_READY	PP0520 P2MM-NSM	ROOM=TEST
SPMI_PMU_BI_PMGR_SDATA	PP0521 P2MM-NSM	ROOM=TEST
PMU_TO_AP_HYDRA_ACTIVE_READY	PP0522 P2MM-NSM	ROOM=TEST

PCIE Refclk

90_PCIE_AP_TO_NAND_REFCLK_P	PP0530 P2MM-NSM	ROOM=TEST
90_PCIE_AP_TO_NAND_REFCLK_N	PP0531 P2MM-NSM	ROOM=TEST

Probe Points

Sensors

SPI_AOP_TO_IMU_SCLK	PP0540 P2MM-NSM	ROOM=TEST
SPI_AOP_TO_IMU_MOSI	PP0541 P2MM-NSM	ROOM=TEST
SPI_IMU_TO_AOP_MISO	PP0542 P2MM-NSM	ROOM=TEST
ACCEL_GYRO_TO_AOP_DATARDY	PP0544 P2MM-NSM	ROOM=TEST
ACCEL_GYRO_TO_AOP_INT	PP0545 P2MM-NSM	ROOM=TEST
COMPASS_TO_AOP_INT	PP0546 P2MM-NSM	ROOM=TEST
PHOSPHORUS_TO_AOP_INT	PP0547 P2MM-NSM	ROOM=TEST

Hydra VBUS

HYDRA_TO_TIGRIS_VBUS1_VALID_L	PP0550 P2MM-NSM	ROOM=TEST

NAND

SWD_AP_BI_NAND_SWDIO	PP0560 P2MM-NSM	ROOM=TEST
SWD_AOP_TO_MANY_SWCLK	PP0561 P2MM-NSM	ROOM=TEST
SPI_S4E_TO_AP_MISO_BOOT_CONFIG2	PP0562 P2MM-NSM	ROOM=TEST
NAND_ANI1_VREF	PP0563 P2MM-NSM	ROOM=TEST
NAND_ANI0_VREF	PP0564 P2MM-NSM	ROOM=TEST

Rigel

CAMPMU_TO_RIGEL_ENABLE	PP0570 P2MM-NSM	ROOM=TEST
RIGEL_TO_ISP_INT	PP0571 P2MM-NSM	ROOM=TEST

PDM_CODEC_TO_ARC_CLK	PP0582 P2MM-NSM	ROOM=TEST
PDM_CODEC_TO_ARC_DATA	PP0583 P2MM-NSM	ROOM=TEST
AP_BI_CCG2_SWDIO	PP0586 P2MM-NSM	ROOM=TEST
AP_TO_CCG2_SWCLK	PP0587 P2MM-NSM	ROOM=TEST

SOC I2C1_AOP

I2C1_AOP_SCL	PP0590 P2MM-NSM	ROOM=TEST
I2C1_AOP_SDA	PP0591 P2MM-NSM	ROOM=TEST

CCG2

CCG2_TO_SMC_INT_L	PP0592 P2MM-NSM	ROOM=TEST

PAGE TITLE
SYSTEM: Testpoints (Top)

Apple Inc.

DRAWING NUMBER 051-02221 SIZE D
REVISION 9.0.0
BRANCH evt-1
PAGE 5 OF 80
SHEET 4 OF 51

NOTICE OF PROPRIETARY PROPERTY:
THE INFORMATION CONTAINED HEREIN IS THE PROPRIETARY PROPERTY OF APPLE INC.
THE POSESSOR AGREES TO THE FOLLOWING:
I TO MAINTAIN THIS DOCUMENT IN CONFIDENCE
II NOT TO REPRODUCE OR COPY IT
III NOT TO REVEAL OR PUBLISH IT IN WHOLE OR PART
IV ALL RIGHTS RESERVED

BOOTSTRAPPING:BOARD REV
BOARD ID
BOOT CONFIG

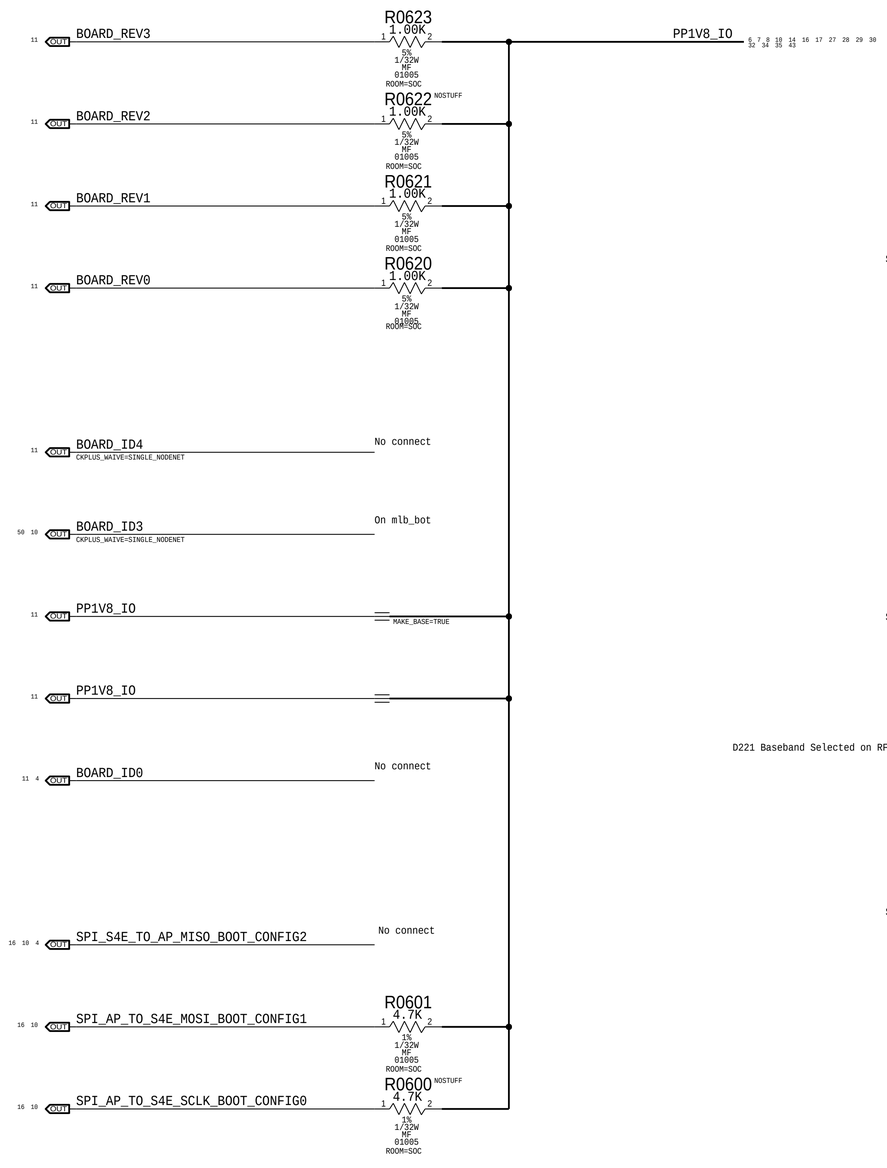

SELECTED -->

Board Rev[3:0] Float=Low I PU=High	3	2	1	0
	Build Major		Build Minor	
Proto 1	1	1	1	1
Proto 1 (DOE6)	1	1	1	0
Proto 2	1	1	0	1
Proto 3	1	1	0	0
EVT	1	0	1	1
(Spare)	1	0	1	0
Carrier	0	1	1	1
(Spare)	0	1	1	0
DVT	0	0	1	1
(Spare)	0	0	1	0
(Spare)	0	0	0	1
PVT	0	0	0	0

SELECTED -->

D221 Baseband Selected on RF Board

Board ID[4:0] Float=Low I PU=High	4	3	2	1	0
	X	Baseband	Form Factor		MLB/Dev
D20 MLB	0	0	0	1	0
D20 Dev	0	0	0	1	1
D21 MLB	0	0	1	0	0
D21 Dev	0	0	1	0	1
D22 MLB	0	0	1	1	0
D22 Dev	0	0	1	1	1
D201 MLB	0	1	0	1	0
D201 Dev	0	1	0	1	1
D211 MLB	0	1	1	0	0
D211 Dev	0	1	1	0	1
D221 MLB	0	1	1	1	0
D221 Dev	0	1	1	1	1

SELECTED -->

Boot Config[2:0] Float=Low I PU=High	2	1	0
SPI0	0	0	0
SPI0 Test Mode	0	0	1
SPI0 NAND	0	1	0
SPI0 NAND Test	0	1	1
Slow SPI0 Test	1	1	0

PAGE TITLE
BOOTSTRAPPING

Apple Inc.

DRAWING NUMBER 051-02221
SIZE D
REVISION 9.0.0
BRANCH evt-1
PAGE 6 OF 80
SHEET 5 OF 51

NOTICE OF PROPRIETARY PROPERTY:
THE INFORMATION CONTAINED HEREIN IS THE PROPRIETARY PROPERTY OF APPLE INC.
THE POSESSOR AGREES TO THE FOLLOWING:
I TO MAINTAIN THIS DOCUMENT IN CONFIDENCE
II NOT TO REPRODUCE OR COPY IT
III NOT TO REVEAL OR PUBLISH IT IN WHOLE OR PART
IV ALL RIGHTS RESERVED

SOC - USB, JTAG, XTAL

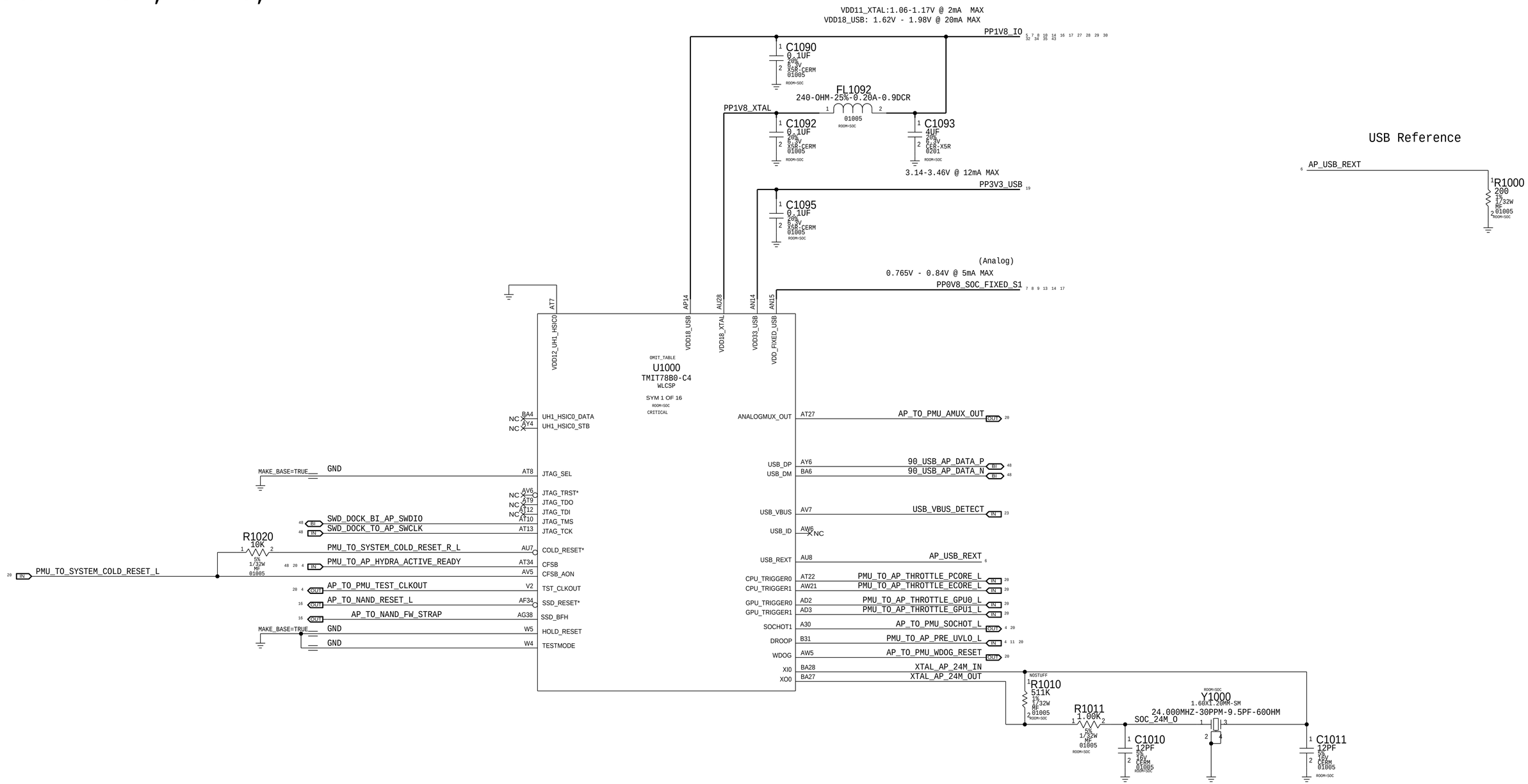

PAGE TITLE	SOC: JTAG,USB,XTAL
Apple Inc.	DRAWING NUMBER 051-02221
	SIZE D
	REVISION 9.0.0
	BRANCH evt-1
	PAGE 10 OF 80
	SHEET 6 OF 51

NOTICE OF PROPRIETARY PROPERTY:
THE INFORMATION CONTAINED HEREIN IS THE PROPRIETARY PROPERTY OF APPLE INC.
THE POSESSOR AGREES TO THE FOLLOWING:
I TO MAINTAIN THIS DOCUMENT IN CONFIDENCE
II NOT TO REPRODUCE OR COPY IT
III NOT TO REVEAL OR PUBLISH IT IN WHOLE OR PART
IV ALL RIGHTS RESERVED

SOC - PCIE INTERFACES

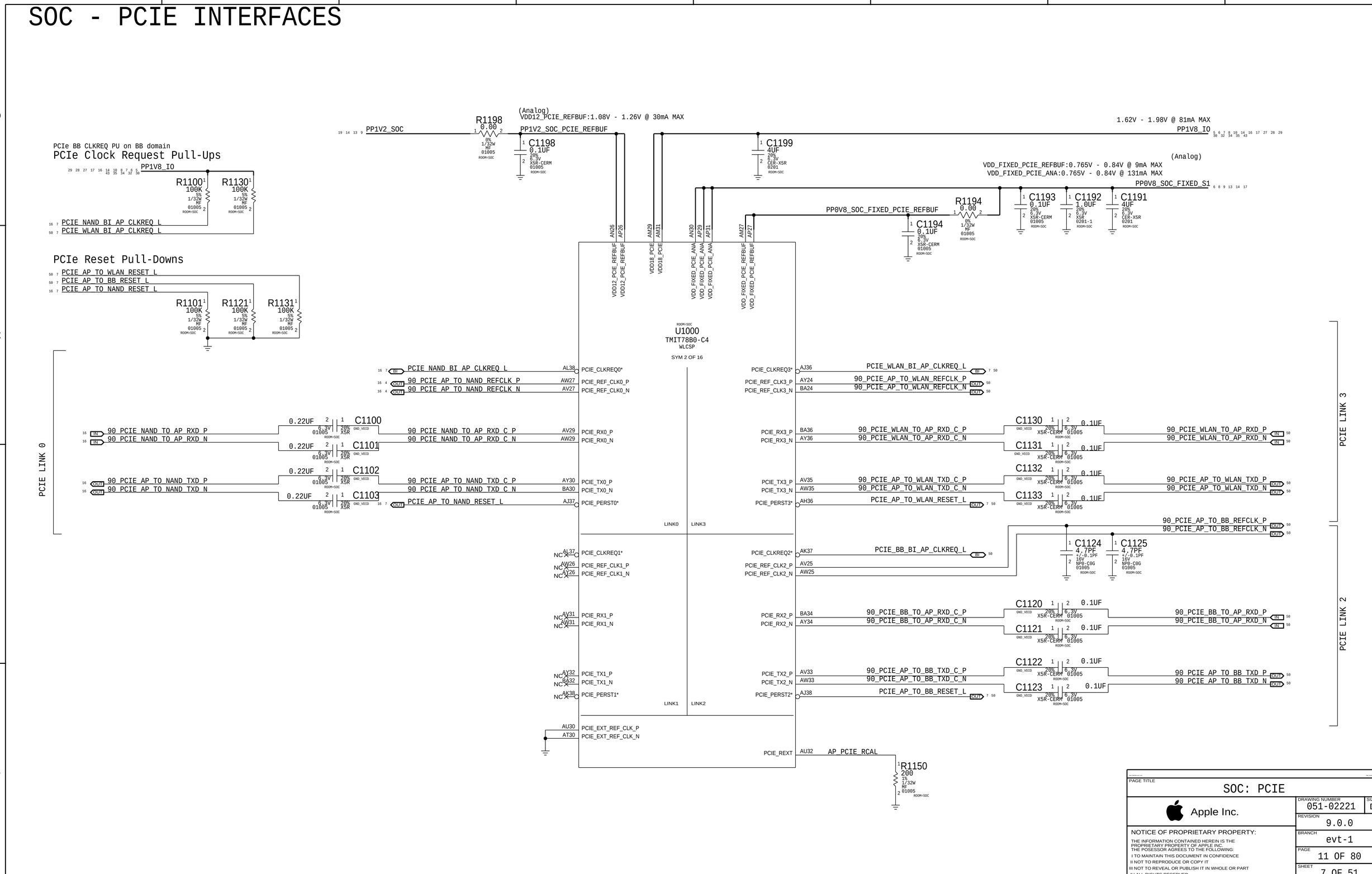

PAGE TITLE
SOC: PCIE

Apple Inc.

DRAWING NUMBER 051-02221 SIZE D
REVISION 9.0.0
BRANCH evt-1
PAGE 11 OF 80
SHEET 7 OF 51

NOTICE OF PROPRIETARY PROPERTY:
THE INFORMATION CONTAINED HEREIN IS THE PROPRIETARY PROPERTY OF APPLE INC.
THE POSESSOR AGREES TO THE FOLLOWING:
I TO MAINTAIN THIS DOCUMENT IN CONFIDENCE
II NOT TO REPRODUCE OR COPY IT
III NOT TO REVEAL OR PUBLISH IT IN WHOLE OR PART
IV ALL RIGHTS RESERVED

SOC - MIPI & ISP INTERFACES

MIPI Lane & Polarity Swapping

Program	Function	SOC LANE	DISTAL LANE	Lane Swap	Polarity Swap
X891	Display	Clock_P	Clock_N		✓
		Clock_N	Clock_P		✓
		Lane_0_P	Lane_0_N		
		Lane_0_N	Lane_0_P		
		Lane_1_P	Lane_1_P		
		Lane_1_N	Lane_1_N		
		Lane_2_P	Lane_3_P	✓	
		Lane_2_N	Lane_3_N	✓	
		Lane_3_P	Lane_2_N	✓	✓
		Lane_3_N	Lane_2_P	✓	✓
	FCAM	Clock_P	Clock_P		
		Clock_N	Clock_N		
		Lane_0_P	Lane_0_N		✓
		Lane_0_N	Lane_0_P		✓
		Lane_1_P	Lane_1_N		✓
		Lane_1_N	Lane_1_P		✓
	JULIET	Clock_P	Clock_N		✓
		Clock_N	Clock_P		✓
		Lane_0_P	Lane_0_P		
		Lane_0_N	Lane_0_N		
		Lane_1_P	Lane_1_P		
		Lane_1_N	Lane_1_N		

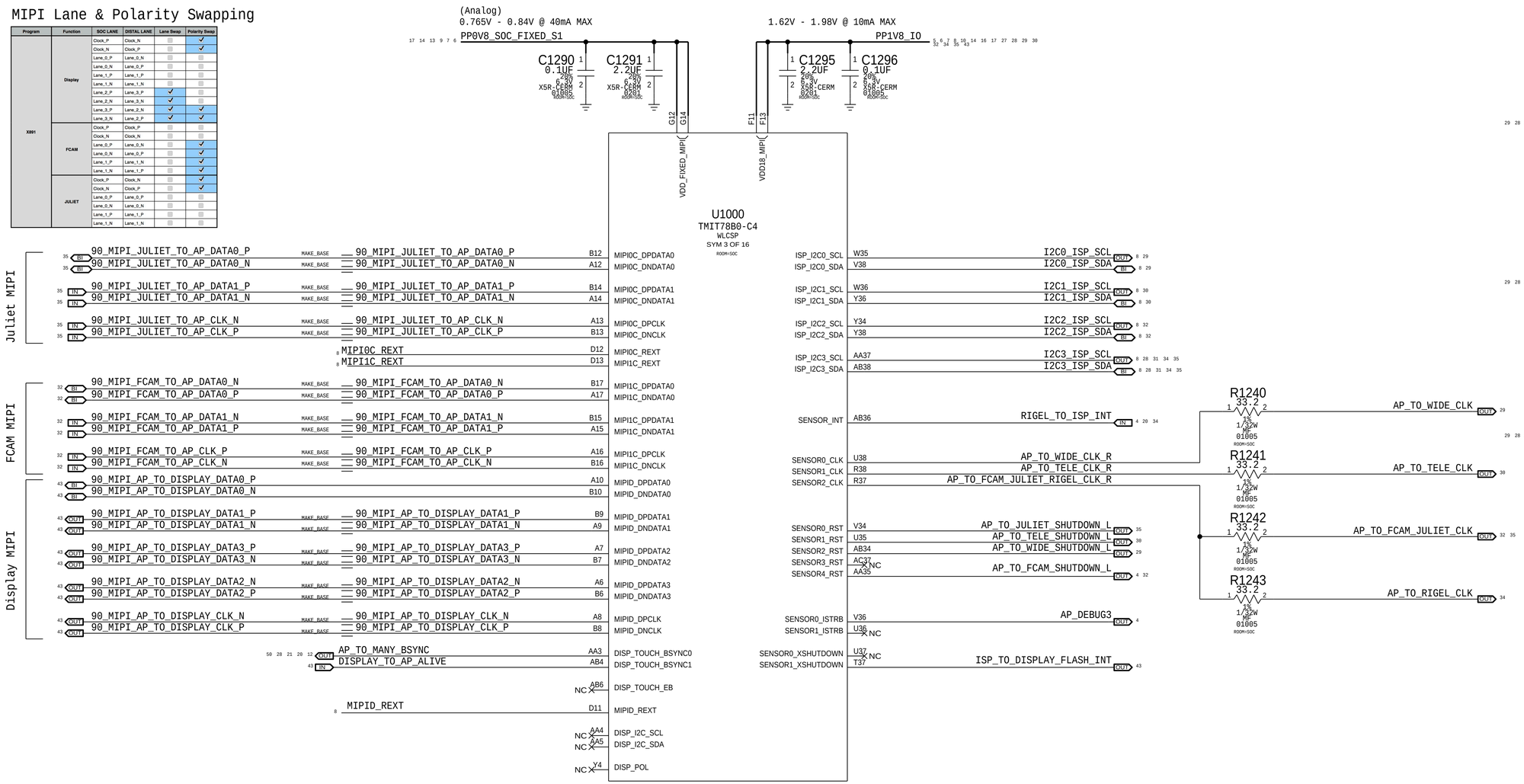

MIPI Reference

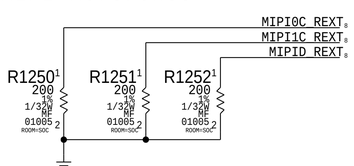

PAGE TITLE
SOC: MIPI & ISP

Apple Inc.

DRAWING NUMBER 051-02221
SIZE D
REVISION 9.0.0
BRANCH evt-1
PAGE 12 OF 80
SHEET 8 OF 51

NOTICE OF PROPRIETARY PROPERTY:
THE INFORMATION CONTAINED HEREIN IS THE PROPRIETARY PROPERTY OF APPLE INC.
THE POSESSOR AGREES TO THE FOLLOWING:
I TO MAINTAIN THIS DOCUMENT IN CONFIDENCE
II NOT TO REPRODUCE OR COPY IT
III NOT TO REVEAL OR PUBLISH IT IN WHOLE OR PART
IV ALL RIGHTS RESERVED

SOC - LPDP

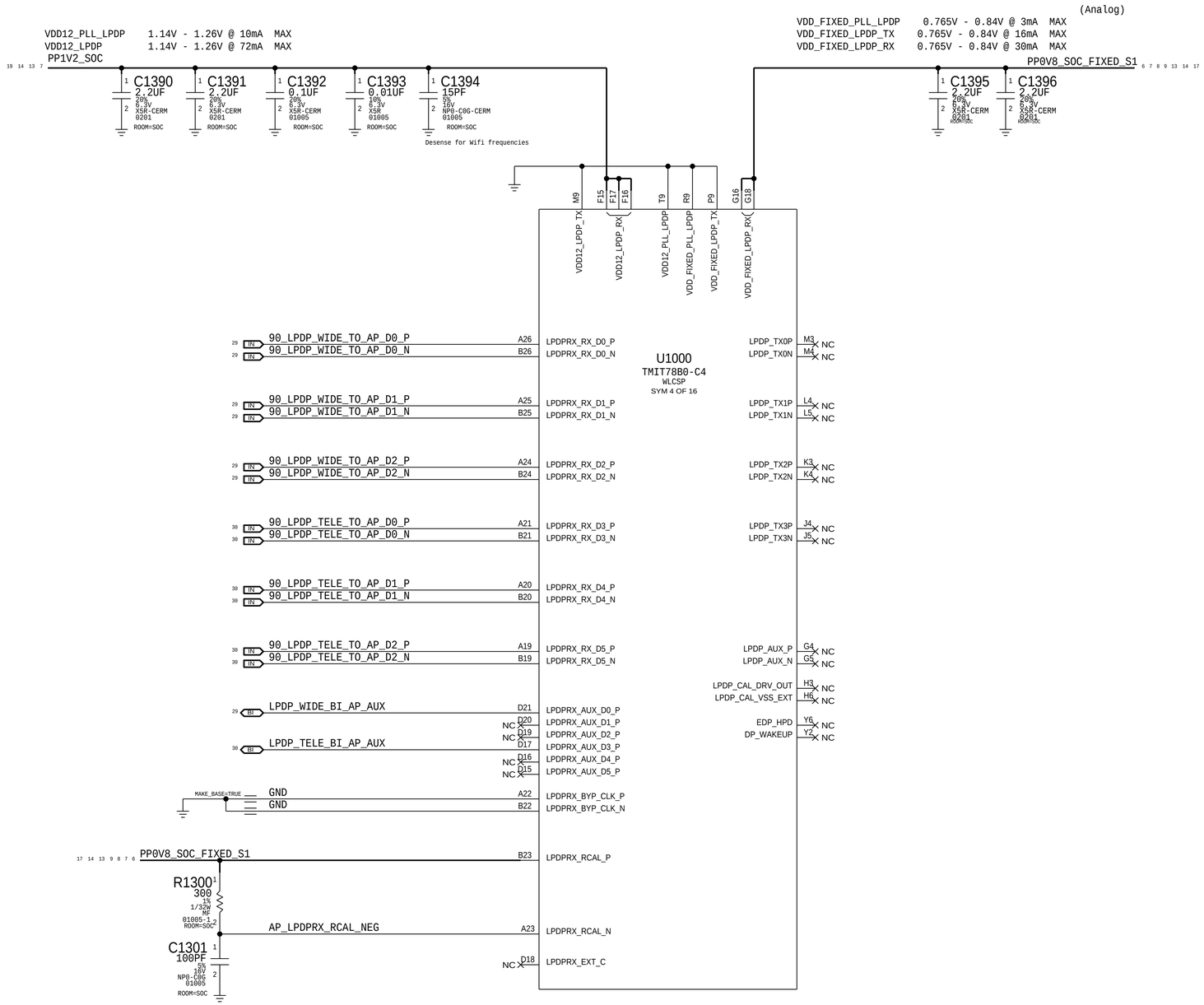

PAGE TITLE

SOC: LPDP

Apple Inc.

DRAWING NUMBER 051-02221 SIZE D

REVISION 9.0.0

BRANCH evt-1

PAGE 13 OF 80

SHEET 9 OF 51

NOTICE OF PROPRIETARY PROPERTY:
THE INFORMATION CONTAINED HEREIN IS THE PROPRIETARY PROPERTY OF APPLE INC.
THE POSESSOR AGREES TO THE FOLLOWING:
I TO MAINTAIN THIS DOCUMENT IN CONFIDENCE
II NOT TO REPRODUCE OR COPY IT
III NOT TO REVEAL OR PUBLISH IT IN WHOLE OR PART
IV ALL RIGHTS RESERVED

SOC - SERIAL INTERFACES

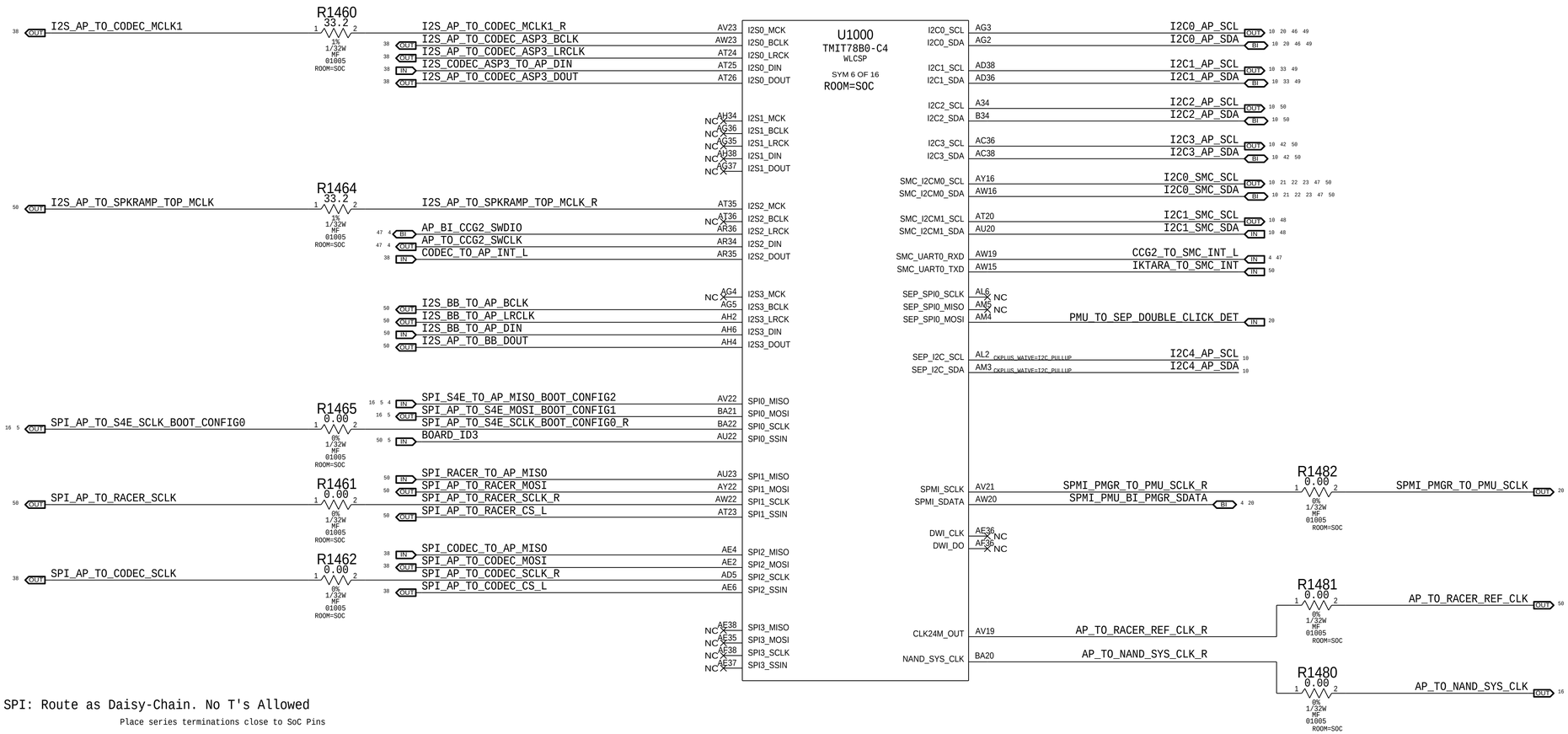

SPI: Route as Daisy-Chain. No T's Allowed

Place series terminations close to SoC Pins

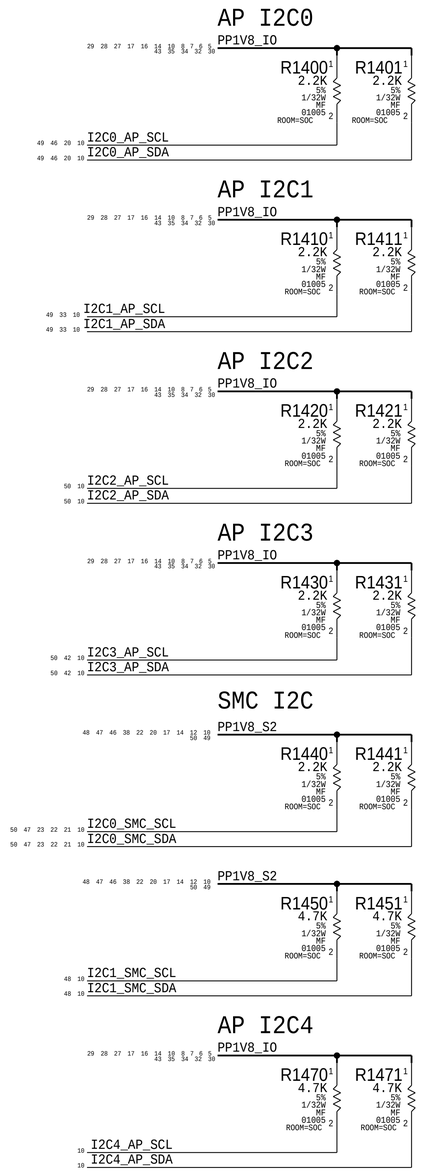

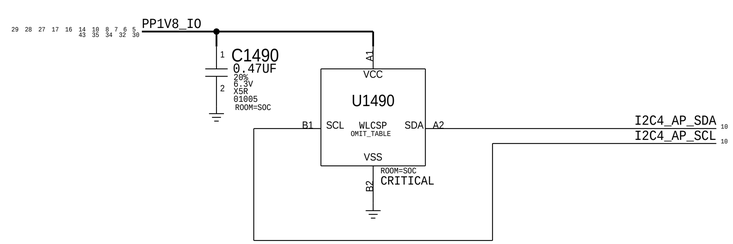

PART#	QTY	DESCRIPTION	REFERENCE DESIGNATOR(S)	CRITICAL	BOM OPTION
335S00234	1	WLCSP	U1490	CRITICAL	COMMON

PART NUMBER	ALTERNATE FOR PART NUMBER	BOM OPTION	REF DES	COMMENTS:
335S00233	335S00234	BOM_TABLE_ALTS	U1490	U1490

PAGE TITLE
SOC: Serial

Apple Inc.

DRAWING NUMBER 051-02221
SIZE D
REVISION 9.0.0
BRANCH evt-1
PAGE 14 OF 80
SHEET 10 OF 51

NOTICE OF PROPRIETARY PROPERTY:
THE INFORMATION CONTAINED HEREIN IS THE PROPRIETARY PROPERTY OF APPLE INC. THE POSESSOR AGREES TO THE FOLLOWING:
I TO MAINTAIN THIS DOCUMENT IN CONFIDENCE
II NOT TO REPRODUCE OR COPY IT
III NOT TO REVEAL OR PUBLISH IT IN WHOLE OR PART
IV ALL RIGHTS RESERVED

SOC - GPIO INTERFACES

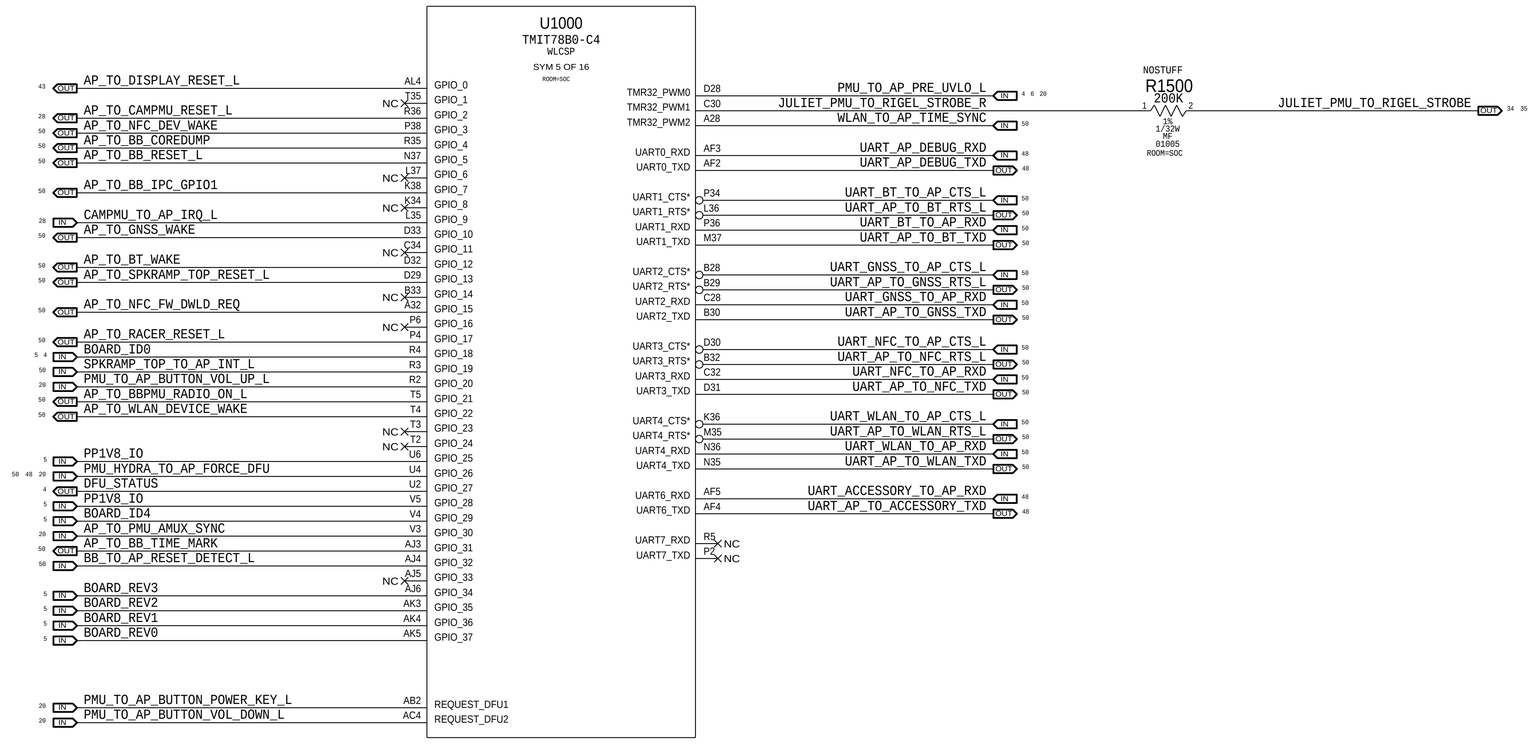

PAGE TITLE

SOC: GPIO & UART

Apple Inc.

DRAWING NUMBER	051-02221
SIZE	D
REVISION	9.0.0
BRANCH	evt-1
PAGE	15 OF 80
SHEET	11 OF 51

NOTICE OF PROPRIETARY PROPERTY:
THE INFORMATION CONTAINED HEREIN IS THE PROPRIETARY PROPERTY OF APPLE INC.
THE POSESSOR AGREES TO THE FOLLOWING:
I TO MAINTAIN THIS DOCUMENT IN CONFIDENCE
II NOT TO REPRODUCE OR COPY IT
III NOT TO REVEAL OR PUBLISH IT IN WHOLE OR PART
IV ALL RIGHTS RESERVED

SOC - AOP

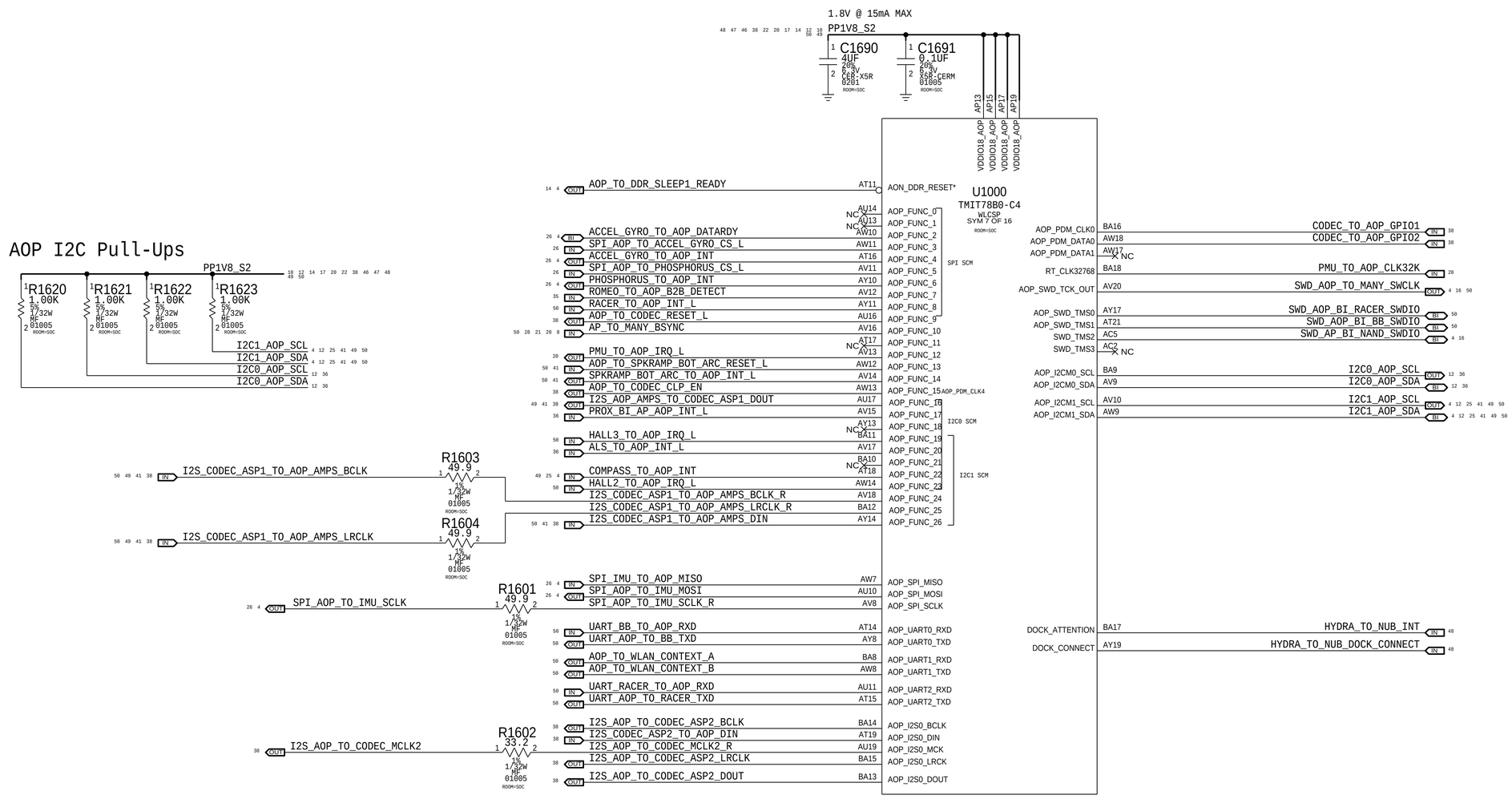

PAGE TITLE

SOC: AOP

Apple Inc.

DRAWING NUMBER 051-02221 SIZE D

REVISION 9.0.0

BRANCH evt-1

PAGE 16 OF 80

SHEET 12 OF 51

NOTICE OF PROPRIETARY PROPERTY:

THE INFORMATION CONTAINED HEREIN IS THE PROPRIETARY PROPERTY OF APPLE INC.
THE POSESSOR AGREES TO THE FOLLOWING:

I TO MAINTAIN THIS DOCUMENT IN CONFIDENCE
II NOT TO REPRODUCE OR COPY IT
III NOT TO REVEAL OR PUBLISH IT IN WHOLE OR PART
IV ALL RIGHTS RESERVED

SOC - CPU, GPU & SOC RAILS

1.06V @ 11.0A MAX
0.8V @ 6A MAX
0.575V @ 2.7A MAX

PP_CPU_PCORE

C1702 4UF 20% 4V X5R 0201 ROOM=SOC
C1703 4UF 20% 4V X5R 0201 ROOM=SOC

OMIT XW1701 SHORT-20L-0.05MM-SM ROOM=SOC — BUCK0_FB

C1704 14UF 20% 4V X5R 0402-D2X-1
C1705 14UF 20% 4V X5R 0402-D2X-1
C1706 14UF 20% 4V X5R 0402-D2X-1
C1707 14UF 20% 4V X5R 0402-D2X-1
C1708 14UF 20% 4V X5R 0402-D2X-1
C1709 14UF 20% 4V X5R 0402-D2X-1
C1710 14UF 20% 4V X5R 0402-D2X-1
C1711 14UF 20% 4V X5R 0402-D2X-1
C1712 14UF 20% 4V X5R 0402-D2X-1
C1713 14UF 20% 4V X5R 0402-D2X-1

U1000 TMIT78B0-C4 WLCSP
SYM 8 OF 16
ROOM=SOC

VDD_CPU: AA14, AA16, AB11, AB13, AB15, AB17, AB19, AC20, AD15, AE14, AF20, AG9, AG15, AH10, AH12, AH14, AH16, AH18, AH20

VDD_GPU: F25, J16, F31, G20, G22, G24, G26, J28, H11, H15, H19, H23, H31, J12, J18, J22, J24, J26, J30, L16, K17, K29, L12, L18, L22, L28, M23, L24, N22, N24, N28

0.7V @ 75mA MAX
PP0V7_VDD_LOW_S2

C1750 4UF 20% 6.3V CER-X5R 0201 ROOM=SOC

VDD_LOW: AM15, AM17, AM19, AM21, AN16, AN18, AN20

1.01V @ 2.1A MAX
0.735V @ 0.6A MAX
PP_CPU_SRAM

C1772 14UF 20% 4V X5R 0402-D2X-1
C1773 14UF 20% 4V X5R 0402-D2X-1

VDD_CPU_SRAM: AA12, AB18, AC9, AC14, AE20, AF14, U14

1.06V @ 1.1A MAX
0.80V @ 0.63A MAX
0.675V @ 0.19A MAX
PP_GPU_SRAM

C1781 14UF 20% 4V X5R 0402-D2X-1
C1782 14UF 20% 4V X5R 0402-D2X-1

VDD_GPU_SRAM: N26, H13, H17, H21, H25, K11, K19, K23, G30, M29

AP_CPU_PCORE_SENSE — AH21 — VDD_CPU_SENSE

AP_VDD_GPU_SENSE — N23 — VDD_GPU_SENSE

VDD_ECPU: AA10, U10, U12, V13, V15, Y13, Y15

VDD_FIXED_CPU: W14
VDD_FIXED_PLL_GPU: K21
VDD_FIXED_PLL_SOC: L20

VDD12_PLL_CPU: W16
VDD12_PLL_GPU: L21
VDD12_PLL_SOC: M20

C1730 4UF 20% 4V X5R 0201 ROOM=SOC
C1731 4UF 20% 4V X5R 0201 ROOM=SOC

1.06V @ 18.3A MAX
0.8V @ 10.6A MAX
0.575V @ 3.4A MAX
PP_GPU

OMIT XW1731 SHORT-20L-0.05MM-SM ROOM=SOC NO_XNET_CONNECTION — BUCK1_FB

C1732 14UF 20% 4V X5R 0402-D2X-1
C1733 14UF 20% 4V X5R 0402-D2X-1
C1734 14UF 20% 4V X5R 0402-D2X-1
C1735 14UF 20% 4V X5R 0402-D2X-1
C1736 14UF 20% 4V X5R 0402-D2X-1
C1737 14UF 20% 4V X5R 0402-D2X-1
C1738 14UF 20% 4V X5R 0402-D2X-1
C1739 14UF 20% 4V X5R 0402-D2X-1

OMIT XW1790 SHORT-20L-0.05MM-SM ROOM=SOC — BUCK11_FB

1.06V @ 4.3A MAX
0.8V @ 2.8A MAX
0.575V @ 1.4A MAX
PP_CPU_ECORE

C1791 14UF 20% 4V X5R 0402-D2X-1
C1792 14UF 20% 4V X5R 0402-D2X-1
C1793 14UF 20% 4V X5R 0402-D2X-1
C1794 4UF 20% 4V X5R 0201 ROOM=SOC

(Analog)
0.8V @ 6mA MAX
0.8V @ 6mA MAX
0.8V @ 10mA MAX
PP0V8_SOC_FIXED_S1

(Analog)
1.2V @ 7mA MAX (CPU)
1.2V @ 7mA MAX (GPU)
1.2V @ 20mA MAX (SOC)
PP1V2_SOC

C1720 0.1UF 20% 6.3V X5R-CERM 01005 ROOM=SOC
C1721 0.1UF 20% 6.3V X5R-CERM 01005 ROOM=SOC
C1722 0.1UF 20% 6.3V X5R-CERM 01005 ROOM=SOC
C1723 4UF 20% 6.3V CER-X5R 0201 ROOM=SOC

C1760 4UF 20% 4V X5R 0201 ROOM=SOC
C1761 4UF 20% 4V X5R 0201 ROOM=SOC

0.765V @ 4.9A MAX
0.635V @ 2.6A MAX
PP_SOC_S1

OMIT XW1760 SHORT-20L-0.05MM-SM ROOM=SOC NO_XNET_CONNECTION — BUCK2_FB

C1762 14UF 20% 4V X5R 0402-D2X-1
C1763 14UF 20% 4V X5R 0402-D2X-1
C1764 14UF 20% 4V X5R 0402-D2X-1

U1000 TMIT78B0-C4 WLCSP
SYM 9 OF 16
ROOM=SOC

VDD_SOC: AA9, AA18, AA22, AA24, AA28, AA30, AB21, AB25, AB27, AC22, AC24, AC28, AC30, AD9, AD21, AD25, AD27, AD29, AE22, AE24, AE28, AF25, AF27, AG22, AG24, AG28, AH25, AH27, AJ16, AJ18, AJ22, AJ24, AJ28, AK13, AK15, AK19, AK21, AK25, AK27, AL12, AL16, AL18, AL22, AL24, AL28, AL30, AM13, AM25, AN12, AN22, AN24, F22

G13, J20, L19, M13, M15, M21, N10, N12, N16, N18, N29, P13, P15, P19, P21, P25, P27, R10, R12, R16, R18, R22, R24, R28, T13, T15, T19, T21, T25, T27, U16, U18, U22, U24, U28, U30, V19, V21, V25, V27, W18, W22, W24, W28, W30, Y19, Y25, Y21, Y27

VDD_SOC_SENSE — P23 — TP_SOC_SENSE

PAGE TITLE	SOC: Power (1/3)
Apple Inc.	DRAWING NUMBER 051-02221 — SIZE D
	REVISION 9.0.0
	BRANCH evt-1
	PAGE 17 OF 80
	SHEET 13 OF 51

NOTICE OF PROPRIETARY PROPERTY:
THE INFORMATION CONTAINED HEREIN IS THE PROPRIETARY PROPERTY OF APPLE INC.
THE POSESSOR AGREES TO THE FOLLOWING:
I TO MAINTAIN THIS DOCUMENT IN CONFIDENCE
II NOT TO REPRODUCE OR COPY IT
III NOT TO REVEAL OR PUBLISH IT IN WHOLE OR PART
IV ALL RIGHTS RESERVED

SOC - POWER SUPPLIES

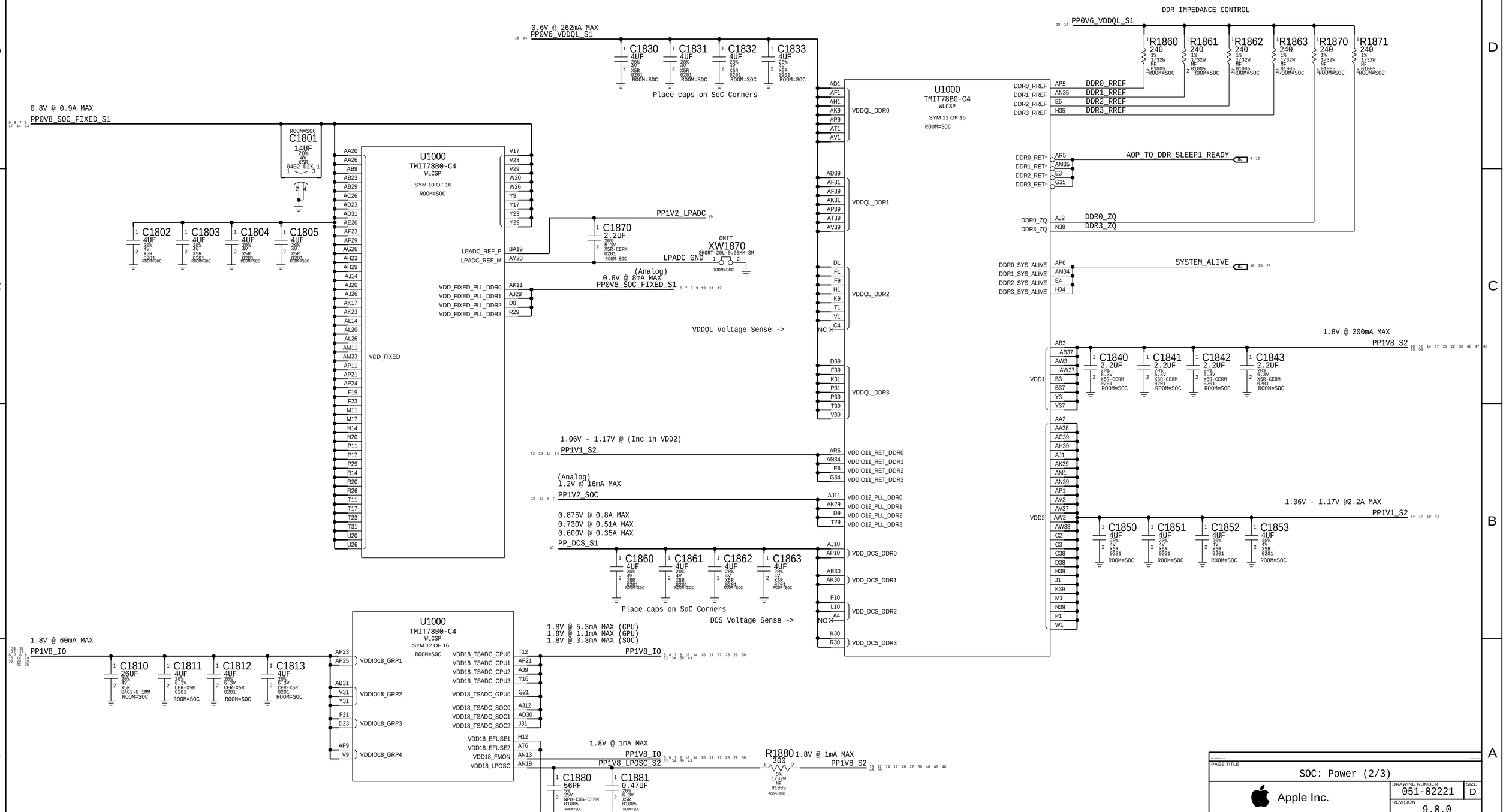

PAGE TITLE

SOC: Power (2/3)

Apple Inc.

DRAWING NUMBER 051-02221 SIZE D

REVISION 9.0.0

BRANCH evt-1

PAGE 18 OF 80

SHEET 14 OF 51

NOTICE OF PROPRIETARY PROPERTY:

THE INFORMATION CONTAINED HEREIN IS THE PROPRIETARY PROPERTY OF APPLE INC. THE POSESSOR AGREES TO THE FOLLOWING:

I TO MAINTAIN THIS DOCUMENT IN CONFIDENCE

II NOT TO REPRODUCE OR COPY IT

III NOT TO REVEAL OR PUBLISH IT IN WHOLE OR PART

IV ALL RIGHTS RESERVED

SOC - POWER SUPPLIES

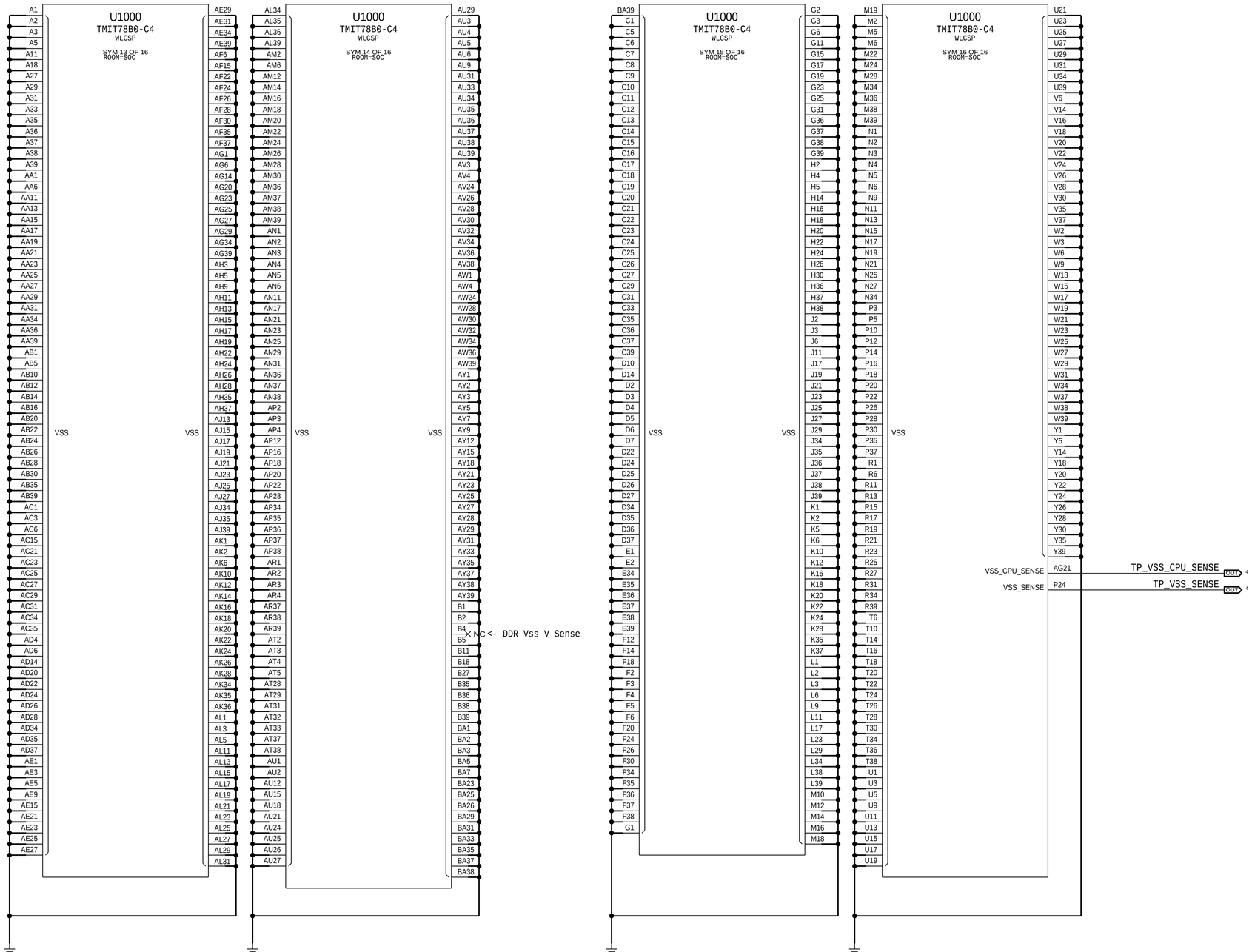

PAGE TITLE

SOC: Power (3/3)

Apple Inc.

DRAWING NUMBER 051-02221

SIZE D

REVISION 9.0.0

BRANCH evt-1

PAGE 19 OF 80

SHEET 15 OF 51

NOTICE OF PROPRIETARY PROPERTY:

THE INFORMATION CONTAINED HEREIN IS THE PROPRIETARY PROPERTY OF APPLE INC.
THE POSESSOR AGREES TO THE FOLLOWING:
I TO MAINTAIN THIS DOCUMENT IN CONFIDENCE
II NOT TO REPRODUCE OR COPY IT
III NOT TO REVEAL OR PUBLISH IT IN WHOLE OR PART
IV ALL RIGHTS RESERVED

S4E NAND

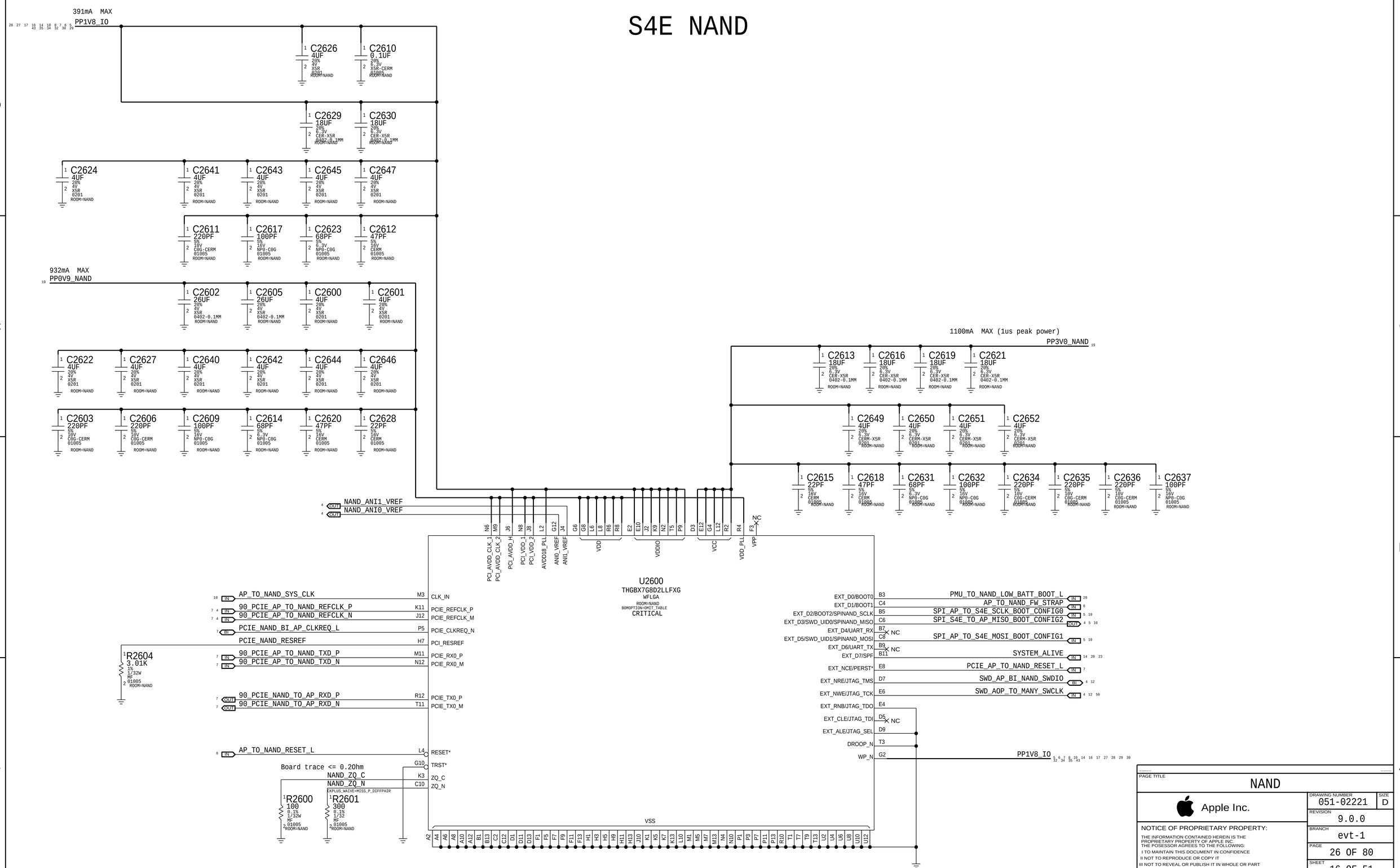

PAGE TITLE
NAND

Apple Inc.

DRAWING NUMBER 051-02221
SIZE D
REVISION 9.0.0
BRANCH evt-1
PAGE 26 OF 80
SHEET 16 OF 51

NOTICE OF PROPRIETARY PROPERTY:
THE INFORMATION CONTAINED HEREIN IS THE PROPRIETARY PROPERTY OF APPLE INC.
THE POSESSOR AGREES TO THE FOLLOWING:
I TO MAINTAIN THIS DOCUMENT IN CONFIDENCE
II NOT TO REPRODUCE OR COPY IT
III NOT TO REVEAL OR PUBLISH IT IN WHOLE OR PART
IV ALL RIGHTS RESERVED

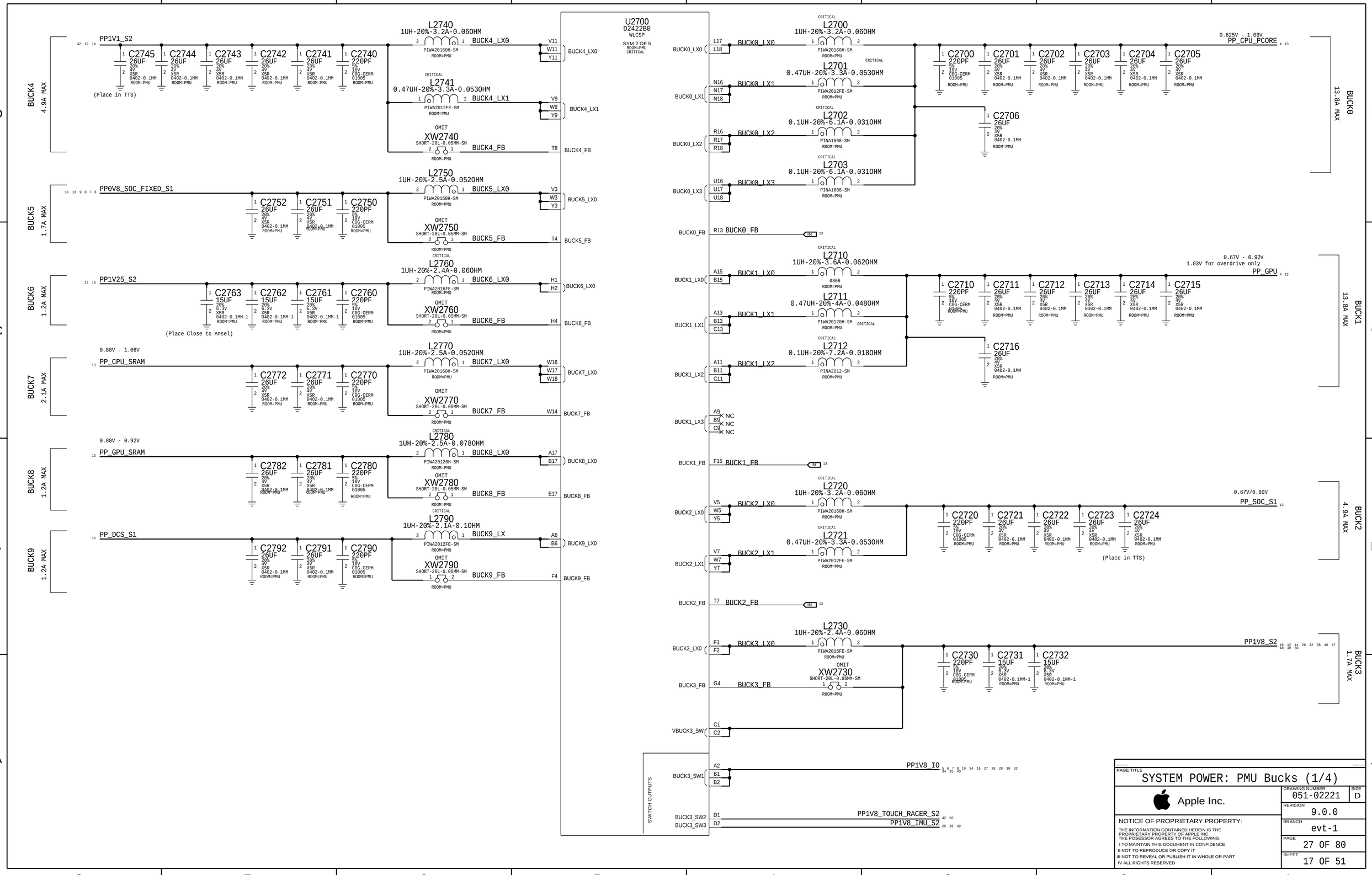
U2700
D2422B0
WLCSP
SYM 2 OF 5
ROOM=PMU
CRITICAL
BUCK4
4.9A MAX
PP1V1_S2
(Place in TTS)
C2745 26UF 20% 4V X5R 0402-0.1MM ROOM=PMU
C2744 26UF 20% 4V X5R 0402-0.1MM ROOM=PMU
C2743 26UF 20% 4V X5R 0402-0.1MM ROOM=PMU
C2742 26UF 20% 4V X5R 0402-0.1MM ROOM=PMU
C2741 26UF 20% 4V X5R 0402-0.1MM ROOM=PMU
C2740 220PF 5% 10V C0G-CERM 01005 ROOM=PMU
L2740 1UH-20%-3.2A-0.060HM PIWA20160H-SM ROOM=PMU
BUCK4_LX0
V11
W11
Y11
L2741 0.47UH-20%-3.3A-0.053OHM PIWA2012FE-SM ROOM=PMU
BUCK4_LX1
V9
W9
Y9
OMIT
XW2740 SHORT-20L-0.05MM-SM ROOM=PMU
BUCK4_FB
T8
BUCK5
1.7A MAX
PP0V8_SOC_FIXED_S1
C2752 26UF 20% 4V X5R 0402-0.1MM ROOM=PMU
C2751 26UF 20% 4V X5R 0402-0.1MM ROOM=PMU
C2750 220PF 5% 10V C0G-CERM 01005 ROOM=PMU
L2750 1UH-20%-2.5A-0.052OHM PIWA20160H-SM ROOM=PMU
BUCK5_LX0
V3
W3
Y3
OMIT
XW2750 SHORT-20L-0.05MM-SM ROOM=PMU
BUCK5_FB
T4
BUCK6
1.2A MAX
PP1V25_S2
C2763 15UF 20% 6.3V X5R 0402-0.1MM-1 ROOM=PMU
C2762 15UF 20% 6.3V X5R 0402-0.1MM-1 ROOM=PMU
C2761 15UF 20% 6.3V X5R 0402-0.1MM-1 ROOM=PMU
C2760 220PF 5% 10V C0G-CERM 01005 ROOM=PMU
(Place Close to Ansel)
L2760 1UH-20%-2.4A-0.060HM PIWA2016FE-SM ROOM=PMU
BUCK6_LX0
H1
H2
OMIT
XW2760 SHORT-20L-0.05MM-SM ROOM=PMU
BUCK6_FB
H4
BUCK7
2.1A MAX
0.80V - 1.06V
PP_CPU_SRAM
C2772 26UF 20% 4V X5R 0402-0.1MM ROOM=PMU
C2771 26UF 20% 4V X5R 0402-0.1MM ROOM=PMU
C2770 220PF 5% 10V C0G-CERM 01005 ROOM=PMU
L2770 1UH-20%-2.5A-0.052OHM PIWA20160H-SM ROOM=PMU
BUCK7_LX0
W16
W17
W18
OMIT
XW2770 SHORT-20L-0.05MM-SM ROOM=PMU
BUCK7_FB
W14
BUCK8
1.2A MAX
0.80V - 0.92V
PP_GPU_SRAM
C2782 26UF 20% 4V X5R 0402-0.1MM ROOM=PMU
C2781 26UF 20% 4V X5R 0402-0.1MM ROOM=PMU
C2780 220PF 5% 10V C0G-CERM 01005 ROOM=PMU
L2780 1UH-20%-2.5A-0.078OHM PIWA20120H-SM ROOM=PMU
BUCK8_LX0
A17
B17
OMIT
XW2780 SHORT-20L-0.05MM-SM ROOM=PMU
BUCK8_FB
E17
BUCK9
1.2A MAX
PP_DCS_S1
C2792 26UF 20% 4V X5R 0402-0.1MM ROOM=PMU
C2791 26UF 20% 4V X5R 0402-0.1MM ROOM=PMU
C2790 220PF 5% 10V C0G-CERM 01005 ROOM=PMU
L2790 1UH-20%-2.1A-0.10HM PIWA2012FE-SM ROOM=PMU
BUCK9_LX
A6
B6
OMIT
XW2790 SHORT-20L-0.05MM-SM ROOM=PMU
BUCK9_FB
F4
BUCK0
13.8A MAX
0.625V - 1.06V
PP_CPU_PCORE
L17
L18
BUCK0_LX0
BUCK0_LX1
N16
N17
N18
BUCK0_LX2
R16
R17
R18
BUCK0_LX3
U16
U17
U18
L2700 1UH-20%-3.2A-0.060HM PIWA20160H-SM ROOM=PMU
L2701 0.47UH-20%-3.3A-0.053OHM PIWA2012FE-SM ROOM=PMU
L2702 0.1UH-20%-6.1A-0.031OHM PINA1608-SM ROOM=PMU
L2703 0.1UH-20%-6.1A-0.031OHM PINA1608-SM ROOM=PMU
C2700 220PF 5% 10V C0G-CERM 01005 ROOM=PMU
C2701 26UF 20% 4V X5R 0402-0.1MM ROOM=PMU
C2702 26UF 20% 4V X5R 0402-0.1MM ROOM=PMU
C2703 26UF 20% 4V X5R 0402-0.1MM ROOM=PMU
C2704 26UF 20% 4V X5R 0402-0.1MM ROOM=PMU
C2705 26UF 20% 4V X5R 0402-0.1MM ROOM=PMU
C2706 26UF 20% 4V X5R 0402-0.1MM ROOM=PMU
BUCK0_FB
R13
BUCK1
13.8A MAX
0.67V - 0.92V
1.03V for overdrive only
PP_GPU
A15
B15
BUCK1_LX0
A13
B13
C13
BUCK1_LX1
A11
B11
C11
BUCK1_LX2
A9
B9
C9
BUCK1_LX3
NC
BUCK1_FB
F15
L2710 1UH-20%-3.6A-0.062OHM 0806 ROOM=PMU
L2711 0.47UH-20%-4A-0.048OHM PIWA20120H-SM ROOM=PMU
L2712 0.1UH-20%-7.2A-0.018OHM PINA2012-SM ROOM=PMU
C2710 220PF 5% 10V C0G-CERM 01005 ROOM=PMU
C2711 26UF 20% 4V X5R 0402-0.1MM ROOM=PMU
C2712 26UF 20% 4V X5R 0402-0.1MM ROOM=PMU
C2713 26UF 20% 4V X5R 0402-0.1MM ROOM=PMU
C2714 26UF 20% 4V X5R 0402-0.1MM ROOM=PMU
C2715 26UF 20% 4V X5R 0402-0.1MM ROOM=PMU
C2716 26UF 20% 4V X5R 0402-0.1MM ROOM=PMU
BUCK2
4.9A MAX
0.67V/0.80V
PP_SOC_S1
V5
W5
Y5
BUCK2_LX0
V7
W7
Y7
BUCK2_LX1
BUCK2_FB
T7
L2720 1UH-20%-3.2A-0.060HM PIWA20160H-SM ROOM=PMU
L2721 0.47UH-20%-3.3A-0.053OHM PIWA2012FE-SM ROOM=PMU
C2720 220PF 5% 10V C0G-CERM 01005 ROOM=PMU
C2721 26UF 20% 4V X5R 0402-0.1MM ROOM=PMU
C2722 26UF 20% 4V X5R 0402-0.1MM ROOM=PMU
C2723 26UF 20% 4V X5R 0402-0.1MM ROOM=PMU
C2724 26UF 20% 4V X5R 0402-0.1MM ROOM=PMU
(Place in TTS)
BUCK3
1.7A MAX
PP1V8_S2
F1
F2
BUCK3_LX0
G4
BUCK3_FB
C1
C2
VBUCK3_SW
L2730 1UH-20%-2.4A-0.060HM PIWA2016FE-SM ROOM=PMU
OMIT
XW2730 SHORT-20L-0.05MM-SM ROOM=PMU
C2730 220PF 5% 10V C0G-CERM 01005 ROOM=PMU
C2731 15UF 20% 6.3V X5R 0402-0.1MM-1 ROOM=PMU
C2732 15UF 20% 6.3V X5R 0402-0.1MM-1 ROOM=PMU
SWITCH OUTPUTS
A2
B1
B2
BUCK3_SW1
PP1V8_IO
D1
D2
BUCK3_SW2
BUCK3_SW3
PP1V8_TOUCH_RACER_S2
PP1V8_IMU_S2
PAGE TITLE
SYSTEM POWER: PMU Bucks (1/4)
Apple Inc.
DRAWING NUMBER
051-02221
SIZE
D
REVISION
9.0.0
NOTICE OF PROPRIETARY PROPERTY:
THE INFORMATION CONTAINED HEREIN IS THE PROPRIETARY PROPERTY OF APPLE INC.
THE POSESSOR AGREES TO THE FOLLOWING:
I TO MAINTAIN THIS DOCUMENT IN CONFIDENCE
II NOT TO REPRODUCE OR COPY IT
III NOT TO REVEAL OR PUBLISH IT IN WHOLE OR PART
IV ALL RIGHTS RESERVED
BRANCH
evt-1
PAGE
27 OF 80
SHEET
17 OF 51

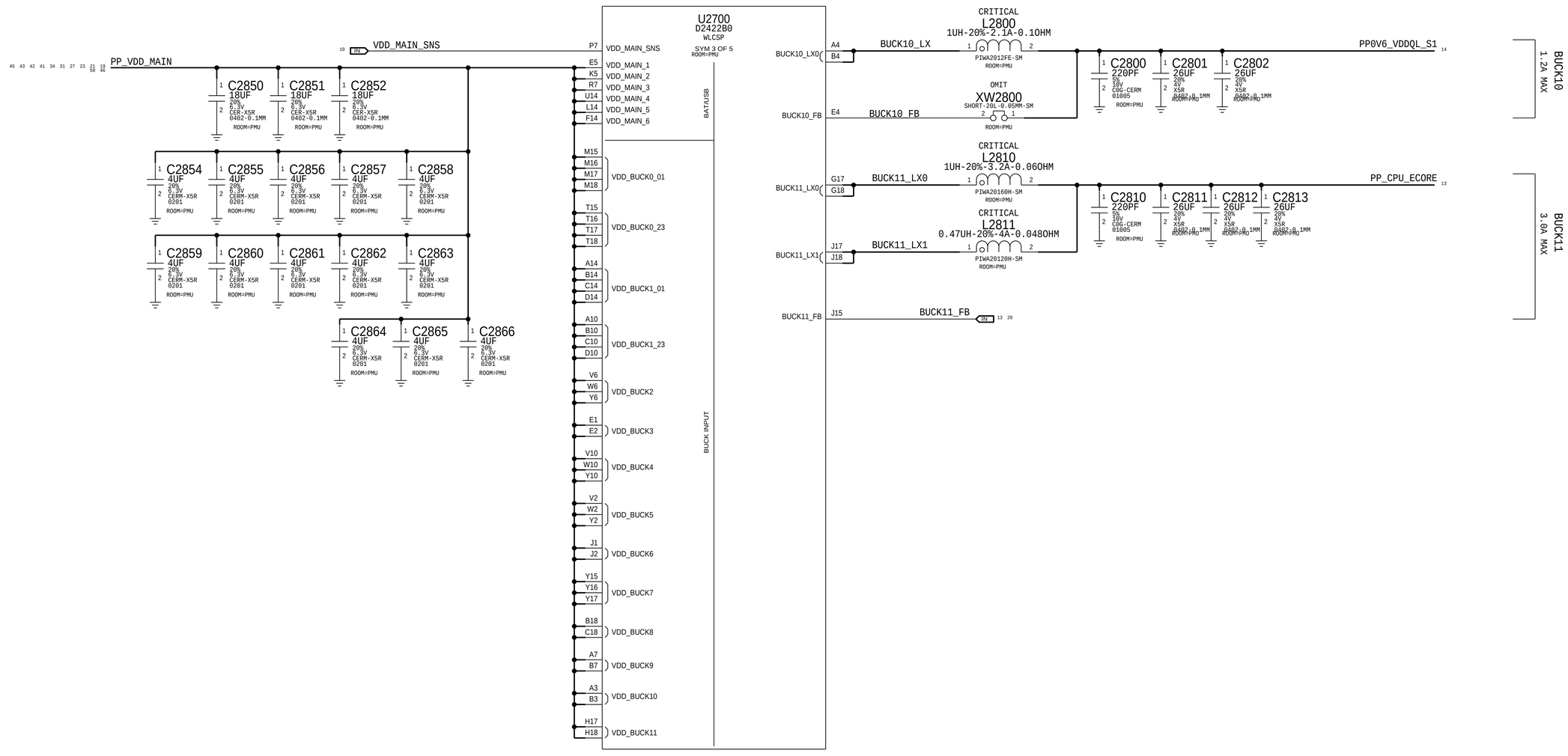

PAGE TITLE
SYSTEM POWER: PMU Bucks (2/4)

Apple Inc.

DRAWING NUMBER 051-02221 SIZE D

REVISION 9.0.0

BRANCH evt-1

PAGE 28 OF 80

SHEET 18 OF 51

NOTICE OF PROPRIETARY PROPERTY:
THE INFORMATION CONTAINED HEREIN IS THE PROPRIETARY PROPERTY OF APPLE INC.
THE POSESSOR AGREES TO THE FOLLOWING:
I TO MAINTAIN THIS DOCUMENT IN CONFIDENCE
II NOT TO REPRODUCE OR COPY IT
III NOT TO REVEAL OR PUBLISH IT IN WHOLE OR PART
IV ALL RIGHTS RESERVED

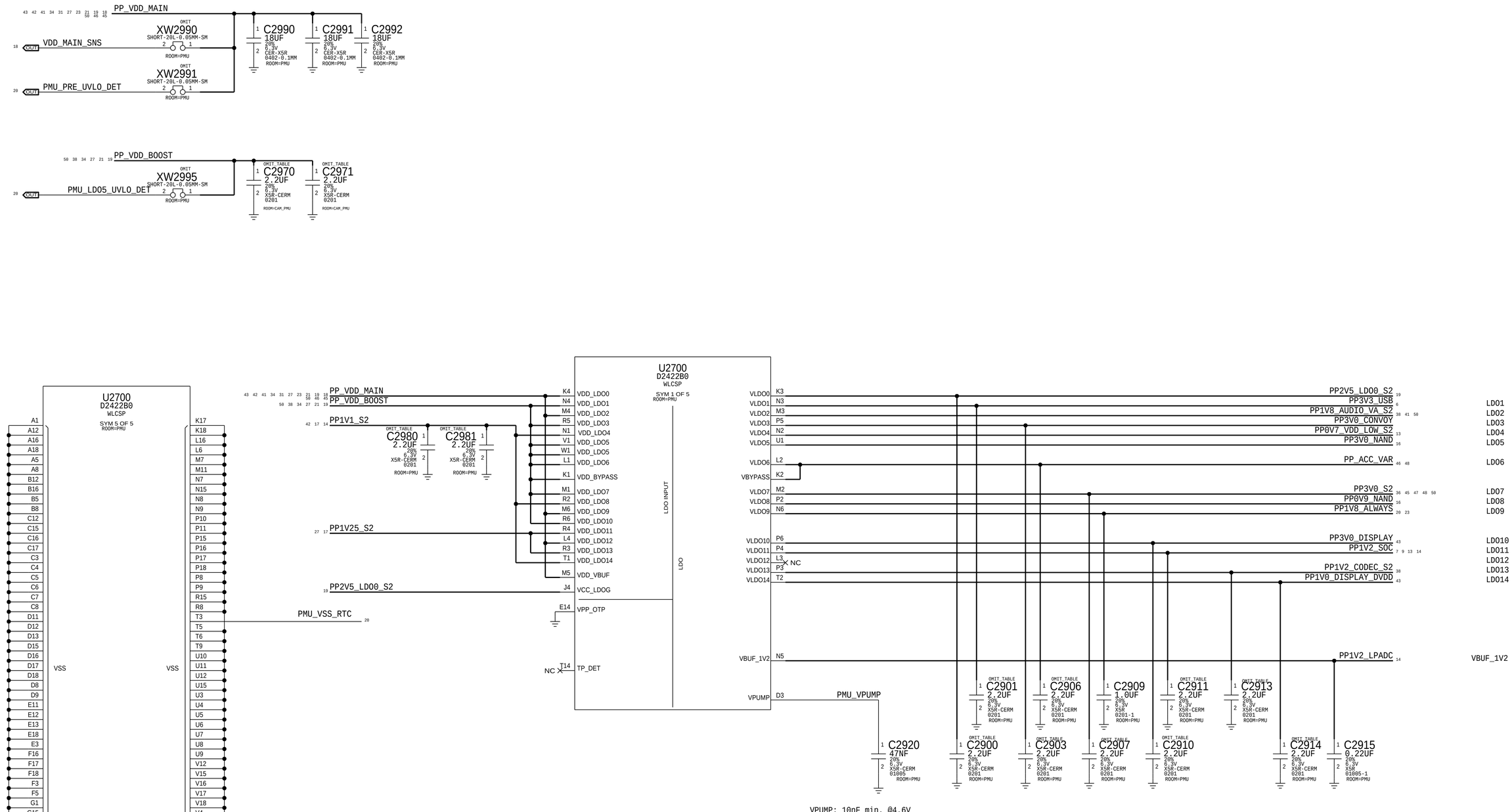

VPUMP: 10nF min. @4.6V

PAGE TITLE

SYSTEM POWER: PMU LDOs (3/4)

Apple Inc.

DRAWING NUMBER 051-02221 SIZE D

REVISION 9.0.0

BRANCH evt-1

PAGE 29 OF 80

SHEET 19 OF 51

NOTICE OF PROPRIETARY PROPERTY:

THE INFORMATION CONTAINED HEREIN IS THE PROPRIETARY PROPERTY OF APPLE INC.
THE POSESSOR AGREES TO THE FOLLOWING:

I TO MAINTAIN THIS DOCUMENT IN CONFIDENCE

II NOT TO REPRODUCE OR COPY IT

III NOT TO REVEAL OR PUBLISH IT IN WHOLE OR PART

IV ALL RIGHTS RESERVED

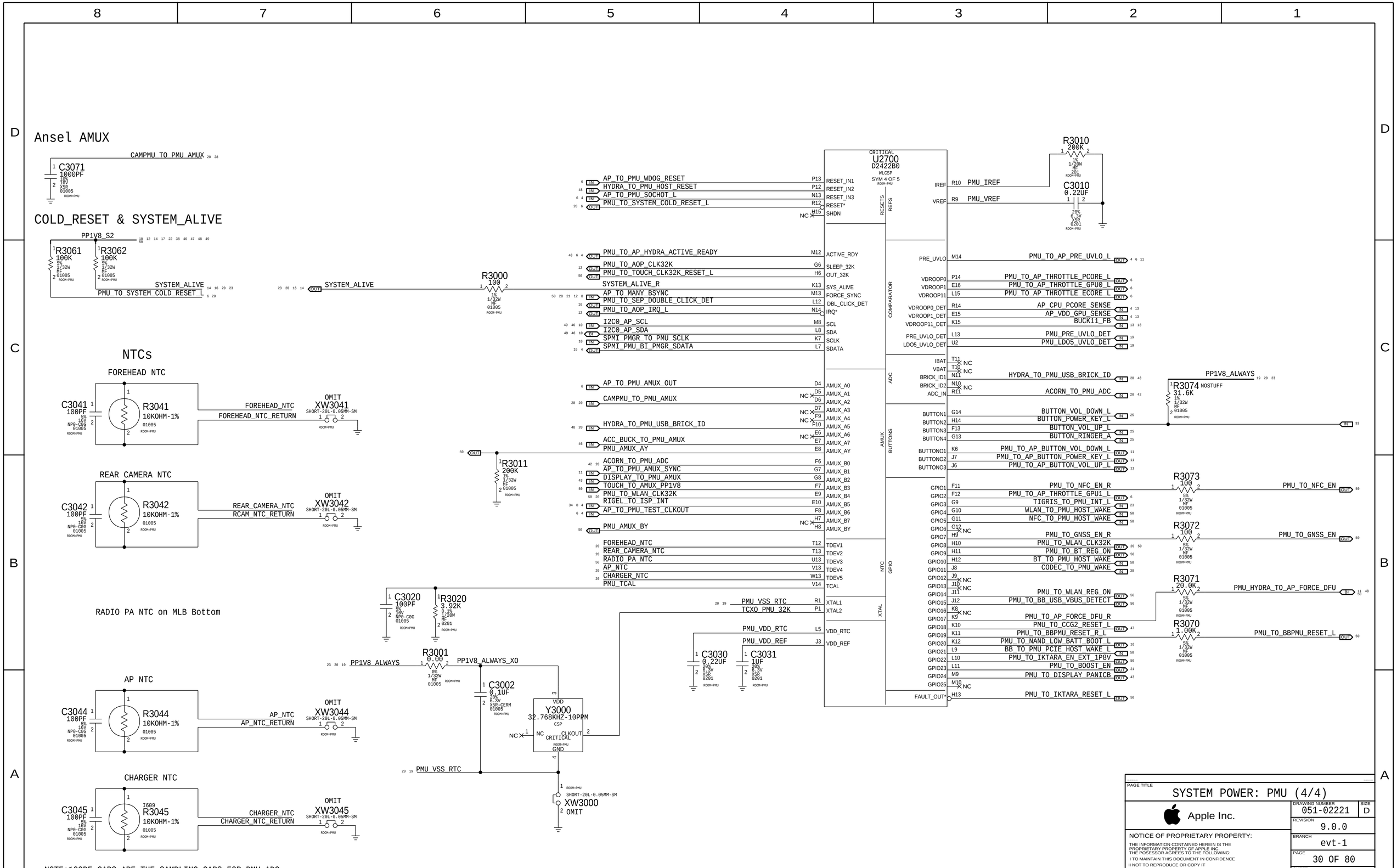

PAGE TITLE	SYSTEM POWER: PMU (4/4)
Apple Inc.	DRAWING NUMBER 051-02221 · SIZE D
	REVISION 9.0.0
	BRANCH evt-1
	PAGE 30 OF 80
	SHEET 20 OF 51

NOTICE OF PROPRIETARY PROPERTY:
THE INFORMATION CONTAINED HEREIN IS THE PROPRIETARY PROPERTY OF APPLE INC.
THE POSESSOR AGREES TO THE FOLLOWING:
I TO MAINTAIN THIS DOCUMENT IN CONFIDENCE
II NOT TO REPRODUCE OR COPY IT
III NOT TO REVEAL OR PUBLISH IT IN WHOLE OR PART
IV ALL RIGHTS RESERVED

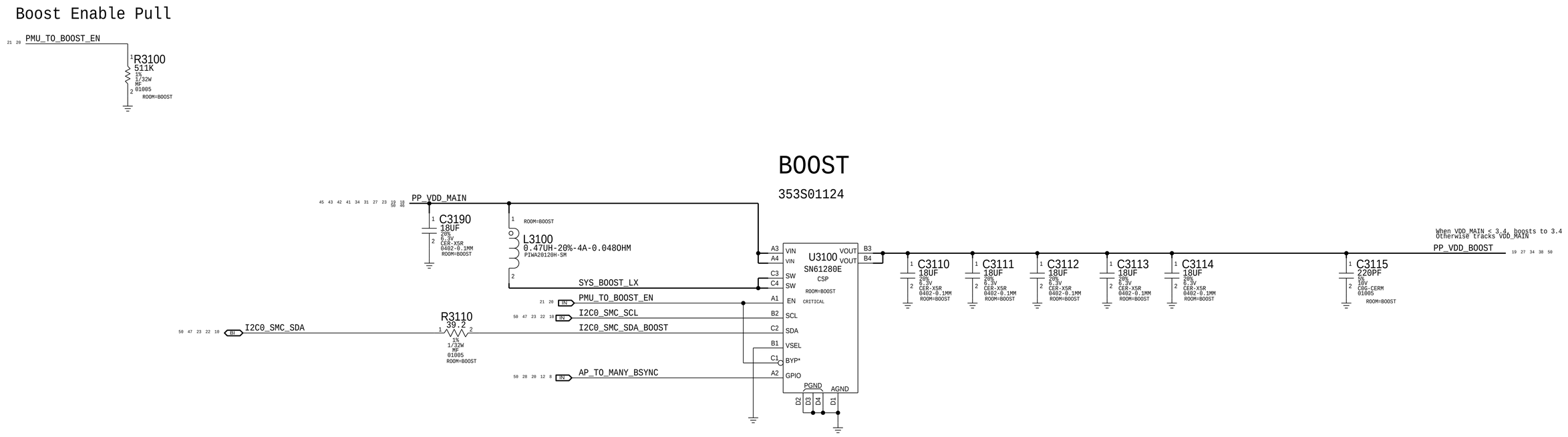

PAGE TITLE

SYSTEM POWER: Boost

Apple Inc.

DRAWING NUMBER 051-02221

SIZE D

REVISION 9.0.0

BRANCH evt-1

PAGE 31 OF 80

SHEET 21 OF 51

NOTICE OF PROPRIETARY PROPERTY:
THE INFORMATION CONTAINED HEREIN IS THE PROPRIETARY PROPERTY OF APPLE INC.
THE POSESSOR AGREES TO THE FOLLOWING:
I TO MAINTAIN THIS DOCUMENT IN CONFIDENCE
II NOT TO REPRODUCE OR COPY IT
III NOT TO REVEAL OR PUBLISH IT IN WHOLE OR PART
IV ALL RIGHTS RESERVED

BATTERY CONNECTOR

Rcpt: 516S00232
Plug: 516S00233

<-- This one on MLB

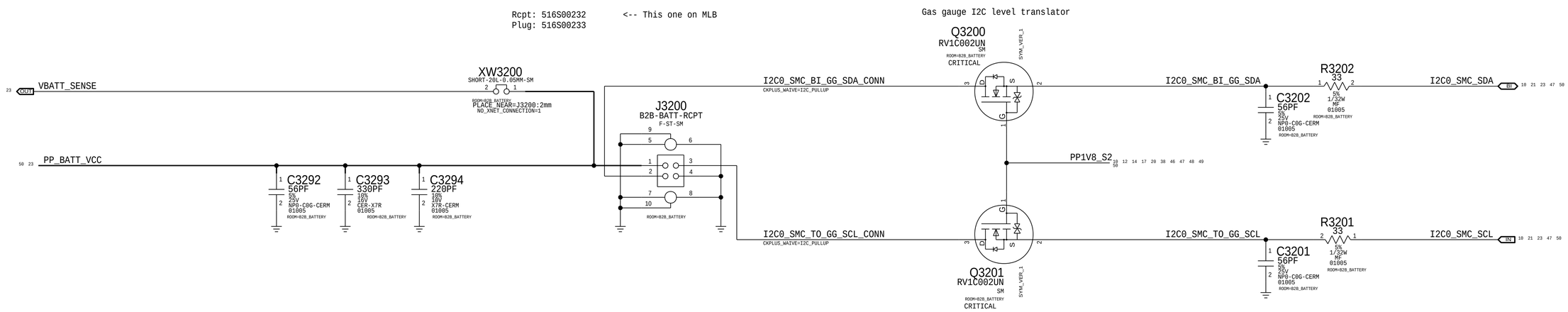

PAGE TITLE
SYSTEM POWER: B2B Battery

Apple Inc.

DRAWING NUMBER 051-02221
SIZE D
REVISION 9.0.0
BRANCH evt-1
PAGE 32 OF 80
SHEET 22 OF 51

NOTICE OF PROPRIETARY PROPERTY:
THE INFORMATION CONTAINED HEREIN IS THE PROPRIETARY PROPERTY OF APPLE INC.
THE POSESSOR AGREES TO THE FOLLOWING:
I TO MAINTAIN THIS DOCUMENT IN CONFIDENCE
II NOT TO REPRODUCE OR COPY IT
III NOT TO REVEAL OR PUBLISH IT IN WHOLE OR PART
IV ALL RIGHTS RESERVED

TIGRIS2 CHARGER

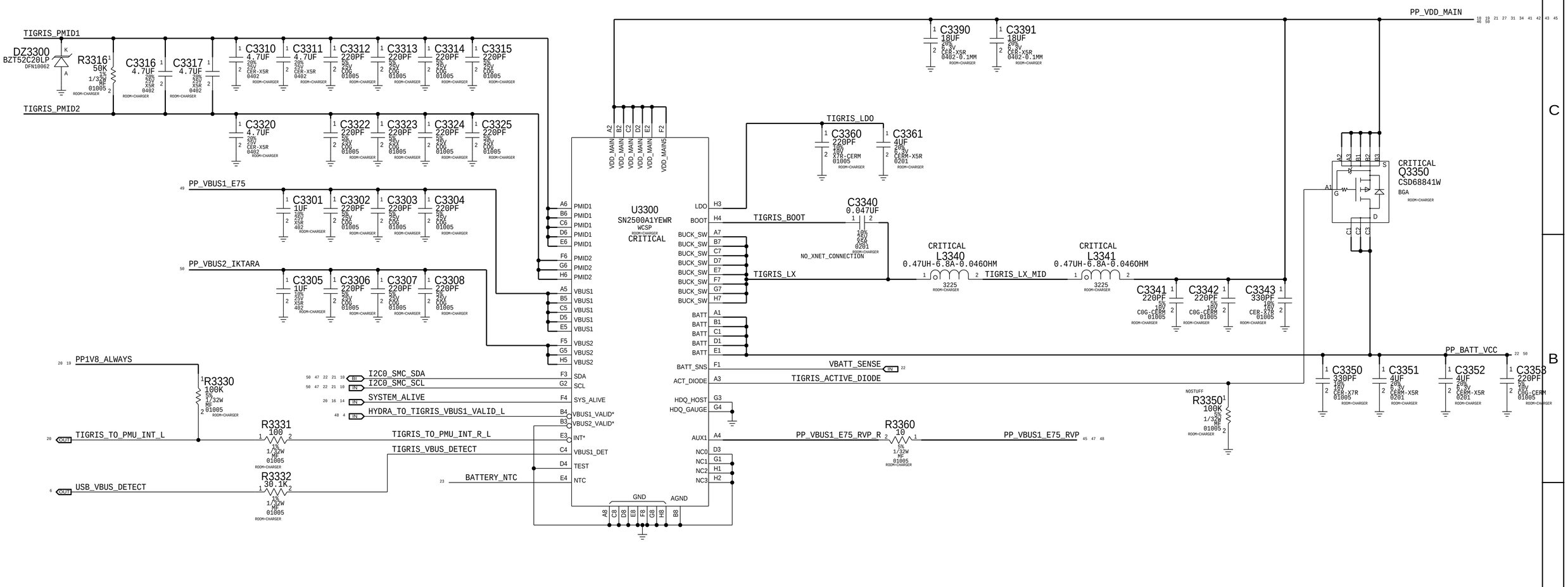

PAGE TITLE

SYSTEM POWER: Charger

Apple Inc.

DRAWING NUMBER 051-02221 SIZE D

REVISION 9.0.0

BRANCH evt-1

PAGE 33 OF 80

SHEET 23 OF 51

NOTICE OF PROPRIETARY PROPERTY:

THE INFORMATION CONTAINED HEREIN IS THE PROPRIETARY PROPERTY OF APPLE INC.
THE POSESSOR AGREES TO THE FOLLOWING:

I TO MAINTAIN THIS DOCUMENT IN CONFIDENCE

II NOT TO REPRODUCE OR COPY IT

III NOT TO REVEAL OR PUBLISH IT IN WHOLE OR PART

IV ALL RIGHTS RESERVED

Iktara Components on MLB Bottom

PAGE TITLE
SYSTEM POWER: Iktara

Apple Inc.

DRAWING NUMBER 051-02221
SIZE D
REVISION 9.0.0
BRANCH evt-1
PAGE 34 OF 80
SHEET 24 OF 51

NOTICE OF PROPRIETARY PROPERTY:
THE INFORMATION CONTAINED HEREIN IS THE PROPRIETARY PROPERTY OF APPLE INC.
THE POSESSOR AGREES TO THE FOLLOWING:
I TO MAINTAIN THIS DOCUMENT IN CONFIDENCE
II NOT TO REPRODUCE OR COPY IT
III NOT TO REVEAL OR PUBLISH IT IN WHOLE OR PART
IV ALL RIGHTS RESERVED

Cyclone Filtering

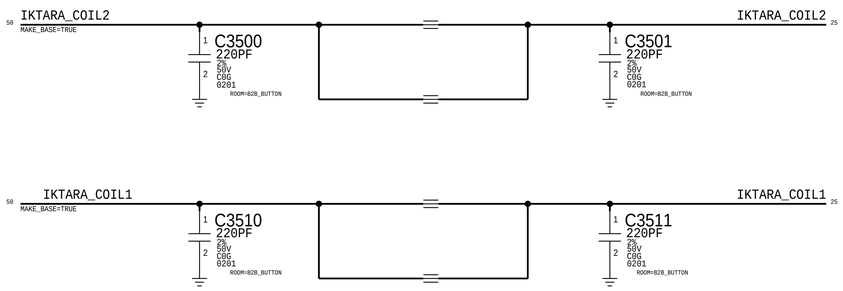

BUTTONS

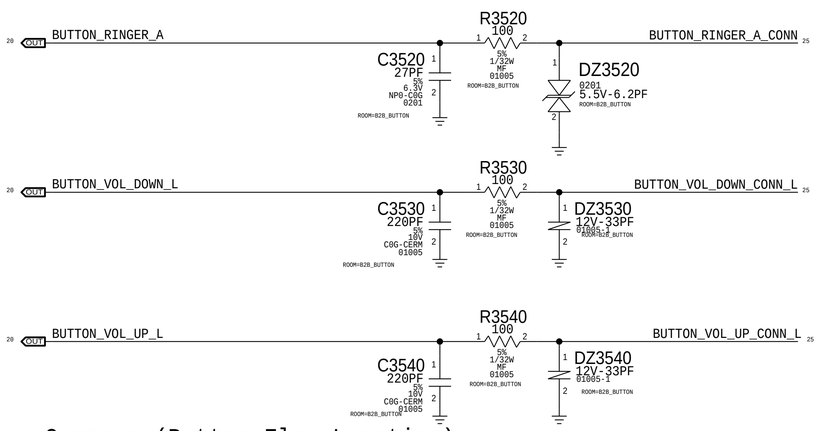

Compass (Button Flex Location)

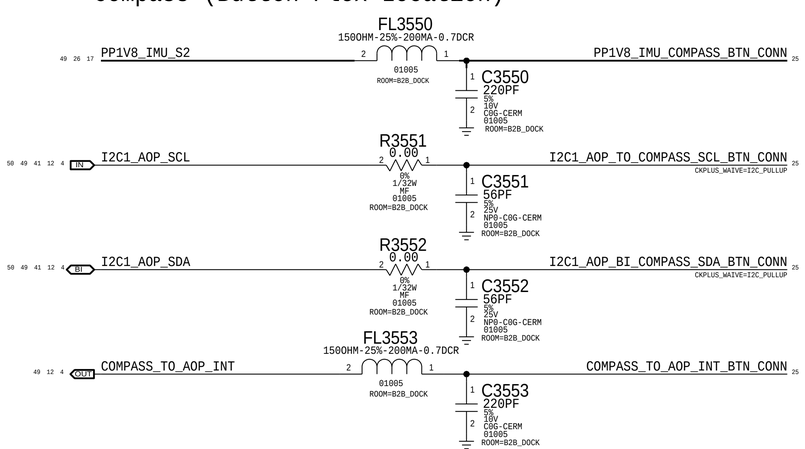

Cyclone + Button Connnector

Rcpt: 516S00289 <-- This one on MLB
Plug: 516S00290

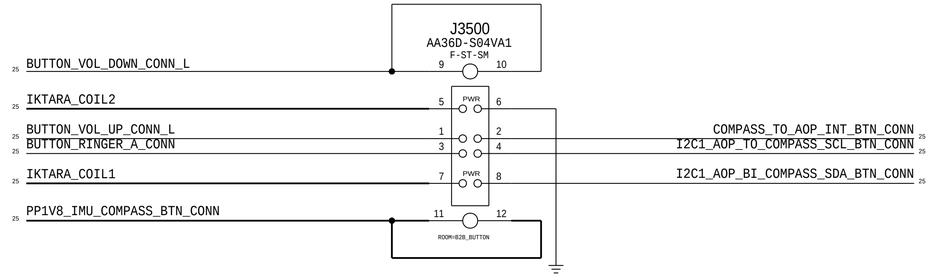

PAGE TITLE
SYSTEM POWER: B2B Cyclone + Button

Apple Inc.

DRAWING NUMBER 051-02221 SIZE D
REVISION 9.0.0
BRANCH evt-1
PAGE 35 OF 80
SHEET 25 OF 51

NOTICE OF PROPRIETARY PROPERTY:
THE INFORMATION CONTAINED HEREIN IS THE PROPRIETARY PROPERTY OF APPLE INC.
THE POSESSOR AGREES TO THE FOLLOWING:
I TO MAINTAIN THIS DOCUMENT IN CONFIDENCE
II NOT TO REPRODUCE OR COPY IT
III NOT TO REVEAL OR PUBLISH IT IN WHOLE OR PART
IV ALL RIGHTS RESERVED

Graphite - Accel & Gyro

APN: 338S00304

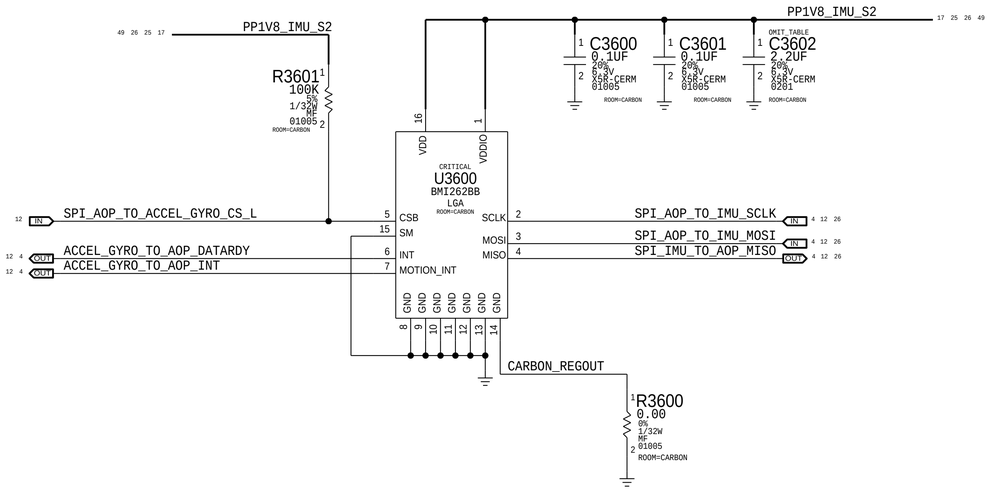

Magnesium - Compass

(On Dock or Button Flex)

Phosphorus

BOSCH (APN:338S00188)
ST (APN:338S00230)

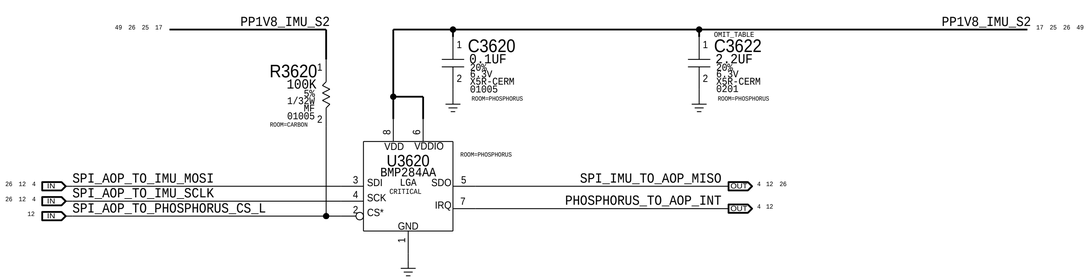

PAGE TITLE

SENSORS

Apple Inc.

DRAWING NUMBER	051-02221
SIZE	D
REVISION	9.0.0
BRANCH	evt-1
PAGE	36 OF 80
SHEET	26 OF 51

NOTICE OF PROPRIETARY PROPERTY:

THE INFORMATION CONTAINED HEREIN IS THE PROPRIETARY PROPERTY OF APPLE INC.
THE POSESSOR AGREES TO THE FOLLOWING:

I TO MAINTAIN THIS DOCUMENT IN CONFIDENCE

II NOT TO REPRODUCE OR COPY IT

III NOT TO REVEAL OR PUBLISH IT IN WHOLE OR PART

IV ALL RIGHTS RESERVED

Camera PMU

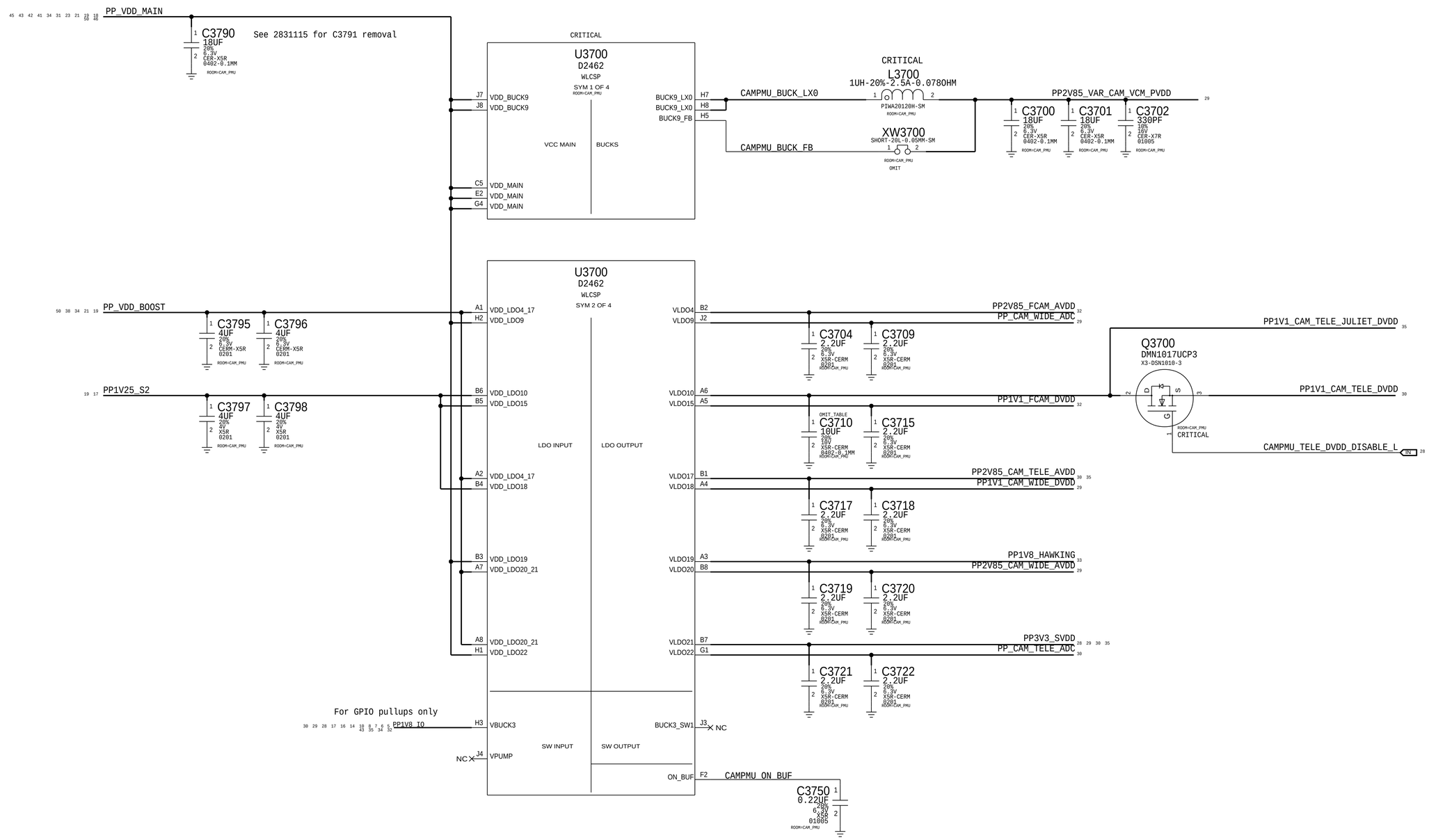

PAGE TITLE	CAMERA: PMU (1/2)
Apple Inc.	DRAWING NUMBER 051-02221 SIZE D
	REVISION 9.0.0
	BRANCH evt-1
	PAGE 37 OF 80
	SHEET 27 OF 51

NOTICE OF PROPRIETARY PROPERTY:
THE INFORMATION CONTAINED HEREIN IS THE PROPRIETARY PROPERTY OF APPLE INC.
THE POSESSOR AGREES TO THE FOLLOWING:
I TO MAINTAIN THIS DOCUMENT IN CONFIDENCE
II NOT TO REPRODUCE OR COPY IT
III NOT TO REVEAL OR PUBLISH IT IN WHOLE OR PART
IV ALL RIGHTS RESERVED

Pull Downs

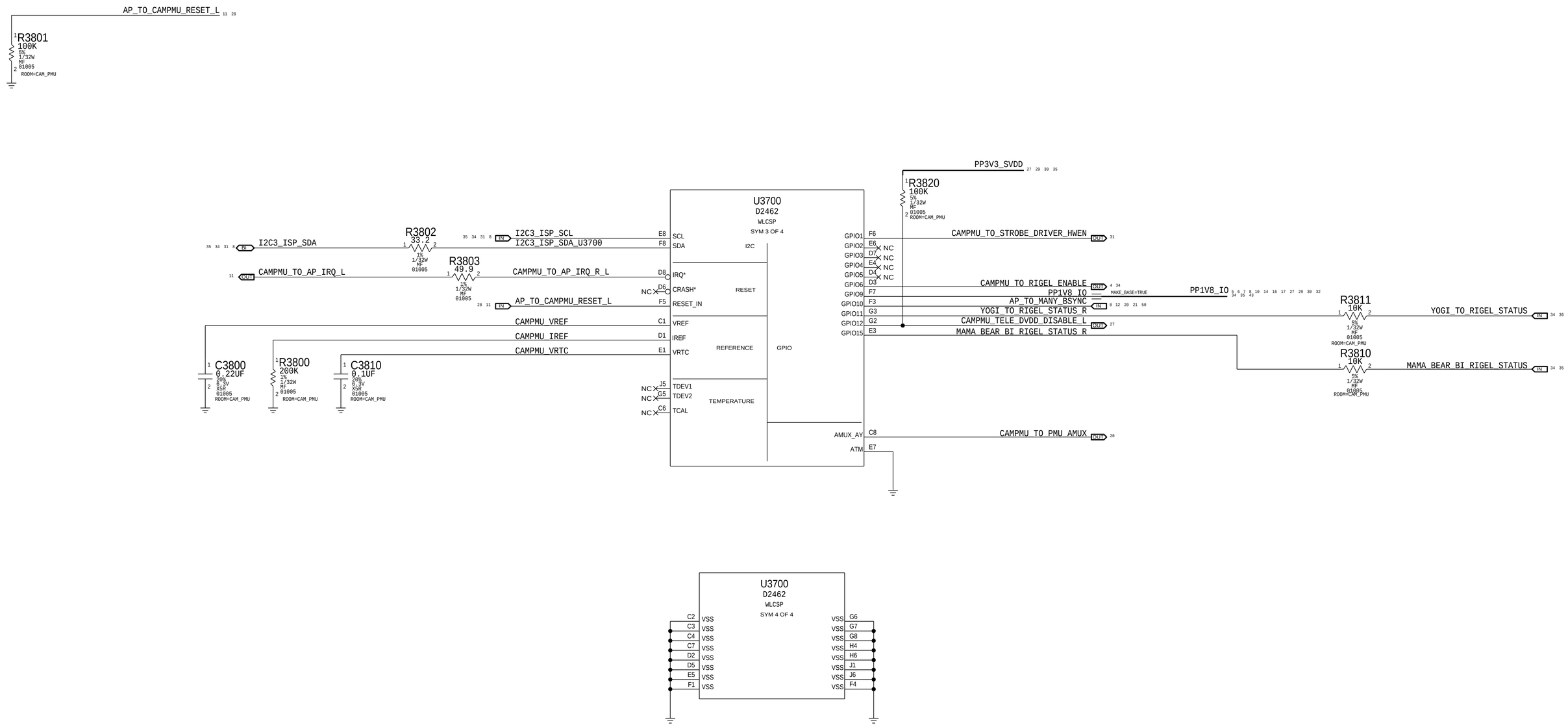

PAGE TITLE

CAMERA: PMU (2/2)

Apple Inc.

DRAWING NUMBER	051-02221
SIZE	D
REVISION	9.0.0
BRANCH	evt-1
PAGE	38 OF 80
SHEET	28 OF 51

NOTICE OF PROPRIETARY PROPERTY:
THE INFORMATION CONTAINED HEREIN IS THE PROPRIETARY PROPERTY OF APPLE INC.
THE POSESSOR AGREES TO THE FOLLOWING:
I TO MAINTAIN THIS DOCUMENT IN CONFIDENCE
II NOT TO REPRODUCE OR COPY IT
III NOT TO REVEAL OR PUBLISH IT IN WHOLE OR PART
IV ALL RIGHTS RESERVED

Wide Camera Connector

Rcpt: 516S00313 <-- This one on MLB
Plug: 516S00314

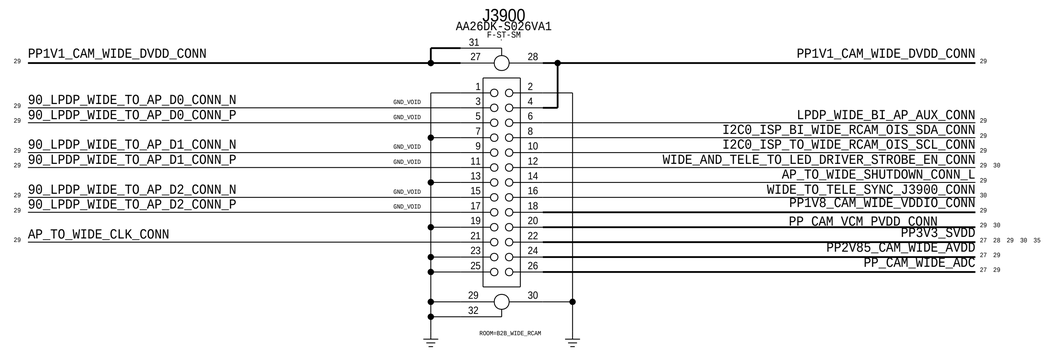

ISP I2C

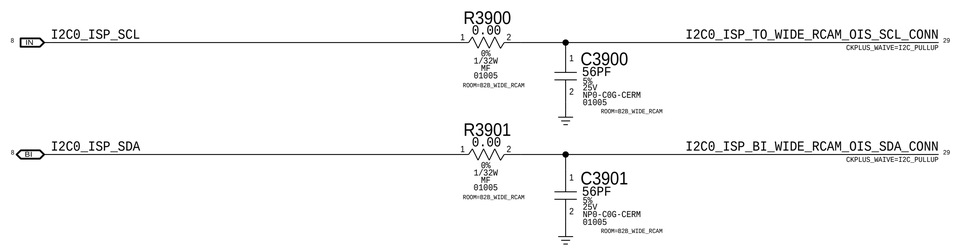

IO Filters

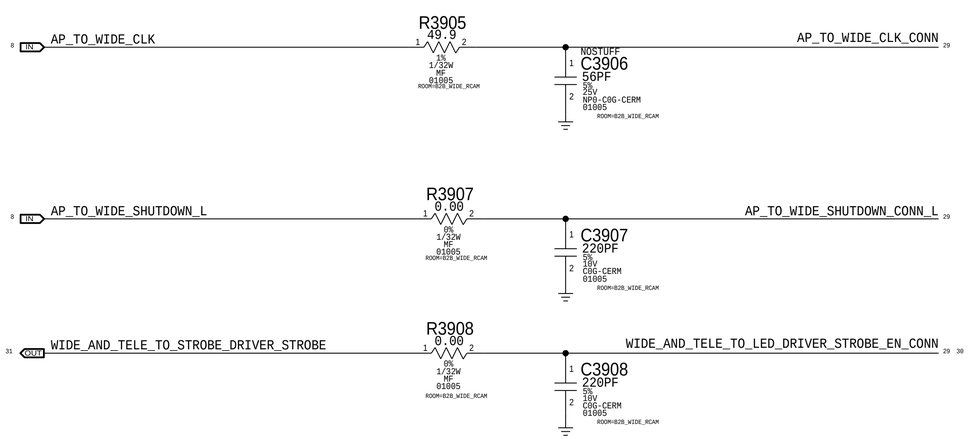

Power Filtering

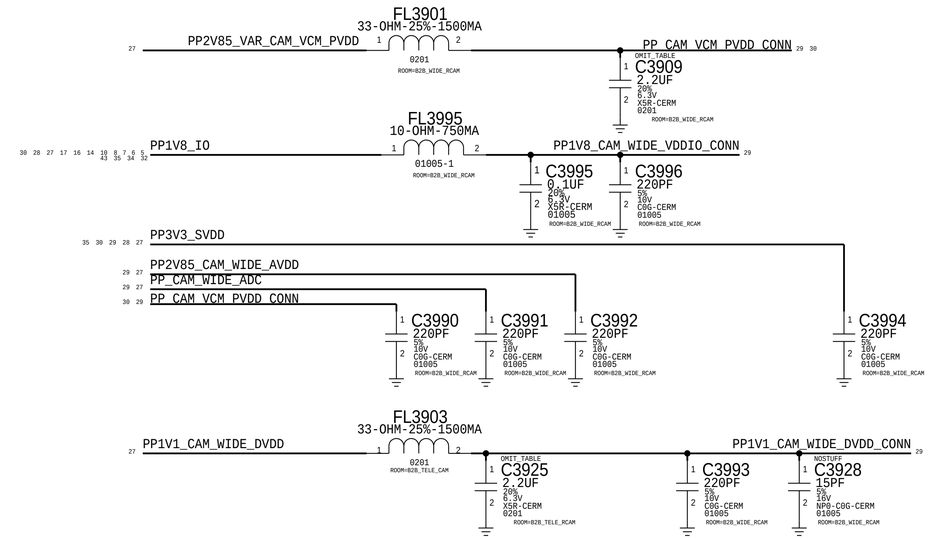

LPDP Filters

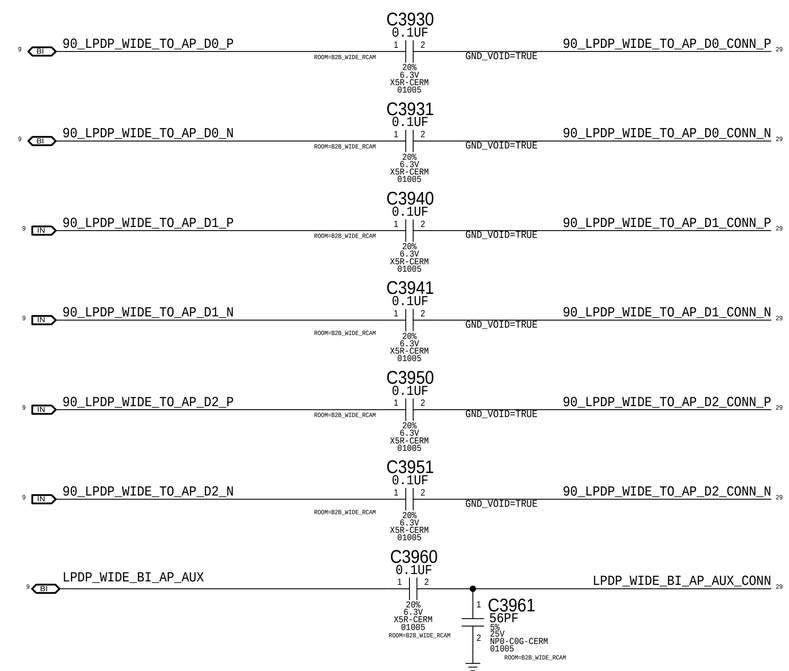

PAGE TITLE	CAMERA: B2B Wide (WY)
Apple Inc.	DRAWING NUMBER 051-02221 SIZE D
	REVISION 9.0.0
	BRANCH evt-1
	PAGE 39 OF 80
	SHEET 29 OF 51

NOTICE OF PROPRIETARY PROPERTY:
THE INFORMATION CONTAINED HEREIN IS THE PROPRIETARY PROPERTY OF APPLE INC.
THE POSESSOR AGREES TO THE FOLLOWING:
I TO MAINTAIN THIS DOCUMENT IN CONFIDENCE
II NOT TO REPRODUCE OR COPY IT
III NOT TO REVEAL OR PUBLISH IT IN WHOLE OR PART
IV ALL RIGHTS RESERVED

Tele Camera Connector

Rcpt: 516S00313 <-- This one on MLB
Plug: 516S00314

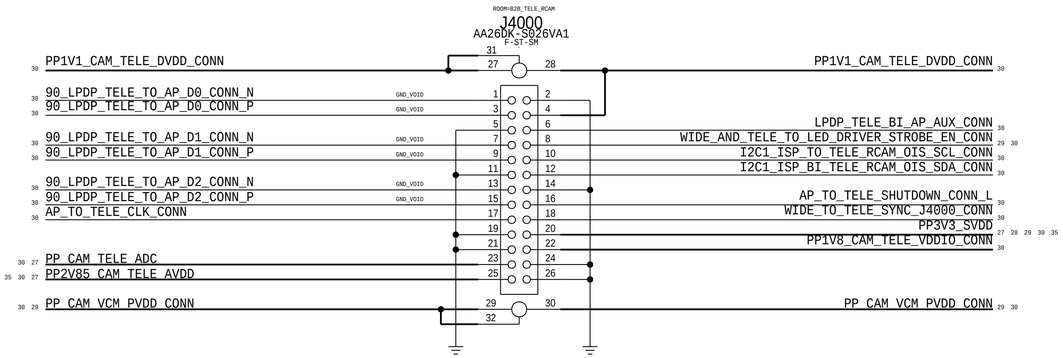

ISP I2C

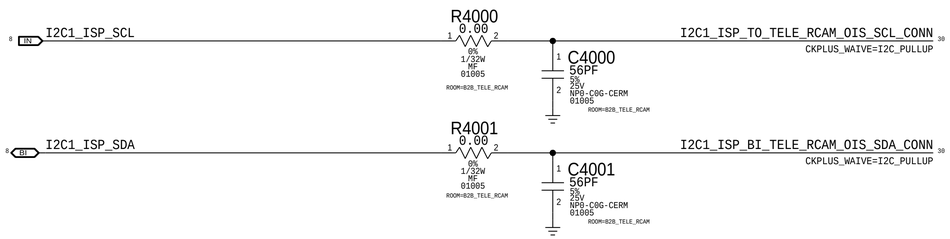

IO Filters

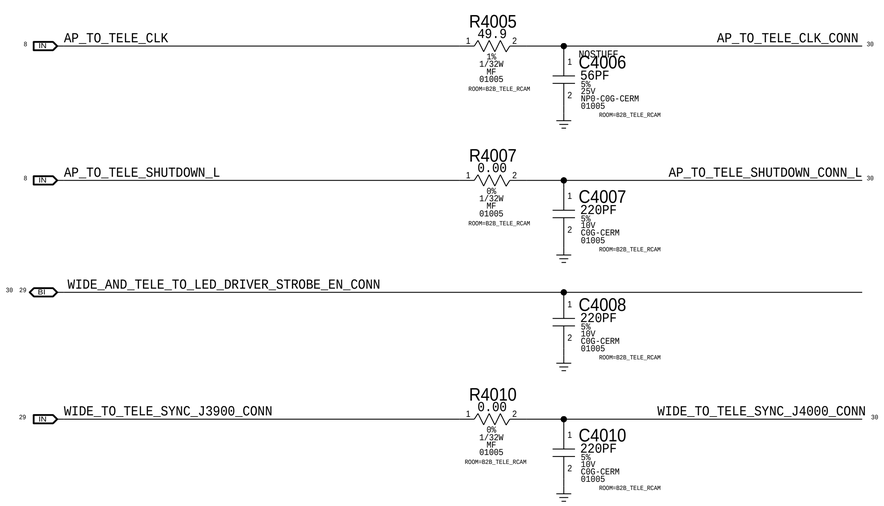

Power Filtering

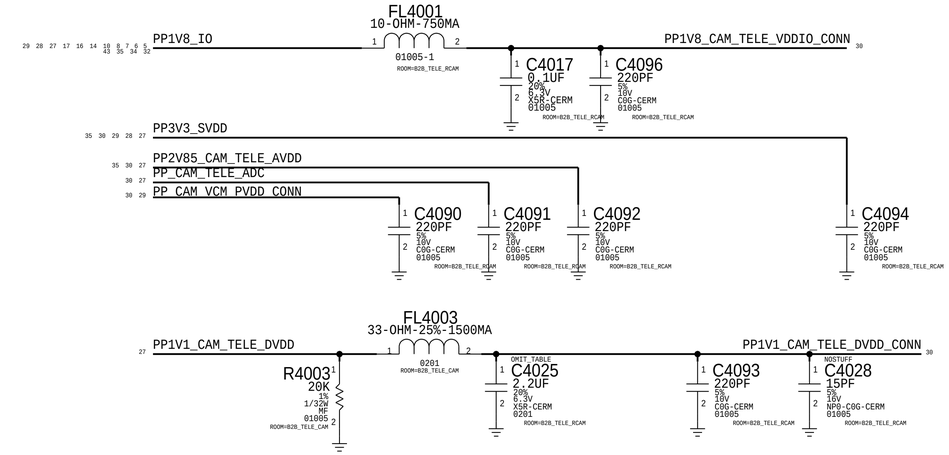

LPDP

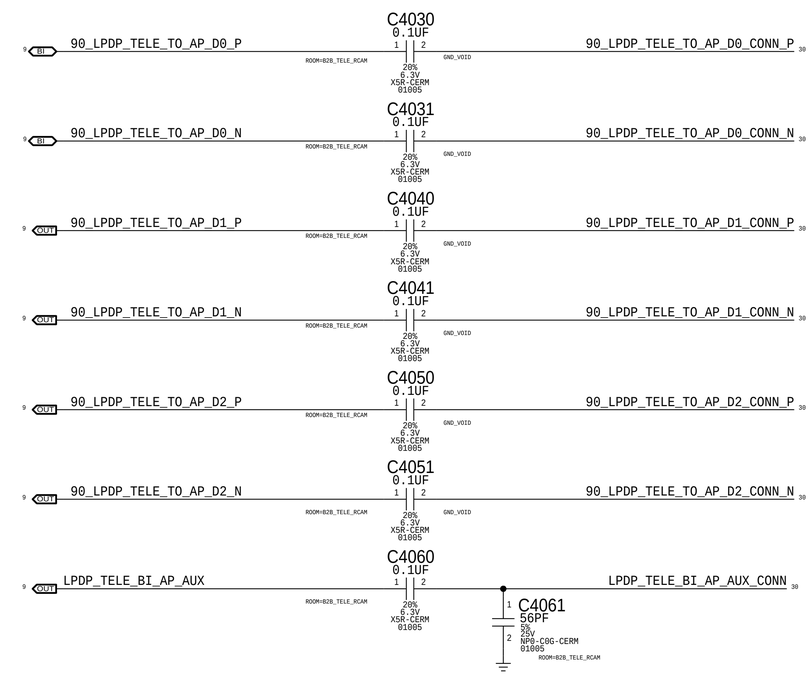

PAGE TITLE	CAMERA: B2B Tele (MT)
Apple Inc.	DRAWING NUMBER 051-02221 — SIZE D
	REVISION 9.0.0
	BRANCH evt-1
	PAGE 40 OF 80
	SHEET 30 OF 51

NOTICE OF PROPRIETARY PROPERTY:
THE INFORMATION CONTAINED HEREIN IS THE PROPRIETARY PROPERTY OF APPLE INC.
THE POSESSOR AGREES TO THE FOLLOWING:
I TO MAINTAIN THIS DOCUMENT IN CONFIDENCE
II NOT TO REPRODUCE OR COPY IT
III NOT TO REVEAL OR PUBLISH IT IN WHOLE OR PART
IV ALL RIGHTS RESERVED

LED STROBE DRIVERS (NEON)

APN:353S00558
I2C Address (7-bit): 0x63

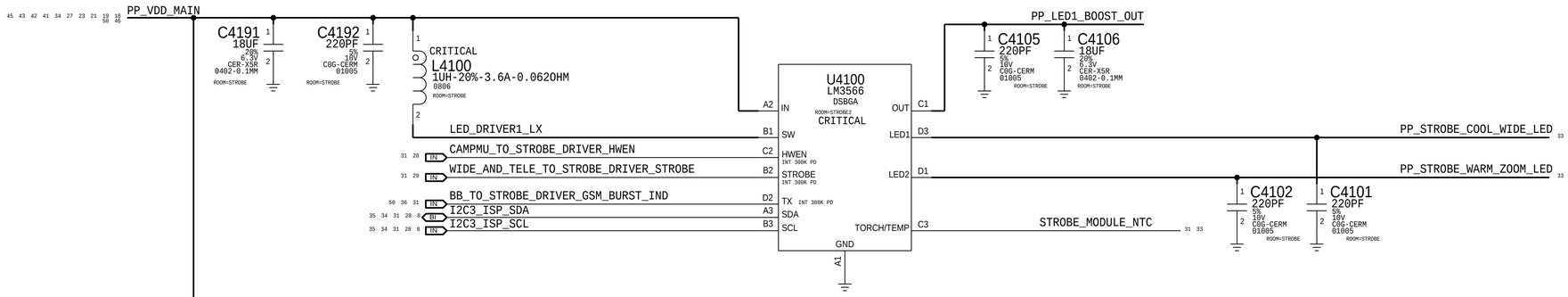

APN:353S00868
I2C Address (7-bit): 0x67

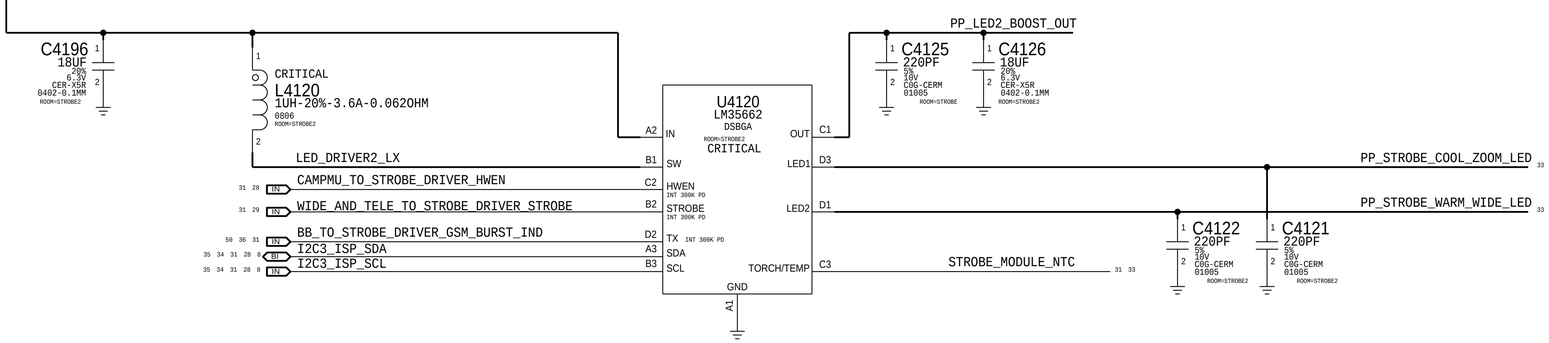

PAGE TITLE
CAMERA: Strobe Drivers

Apple Inc.

DRAWING NUMBER	051-02221
SIZE	D
REVISION	9.0.0
BRANCH	evt-1
PAGE	41 OF 80
SHEET	31 OF 51

NOTICE OF PROPRIETARY PROPERTY:
THE INFORMATION CONTAINED HEREIN IS THE PROPRIETARY PROPERTY OF APPLE INC.
THE POSESSOR AGREES TO THE FOLLOWING:
I TO MAINTAIN THIS DOCUMENT IN CONFIDENCE
II NOT TO REPRODUCE OR COPY IT
III NOT TO REVEAL OR PUBLISH IT IN WHOLE OR PART
IV ALL RIGHTS RESERVED

NEW HAMPSHIRE POWER

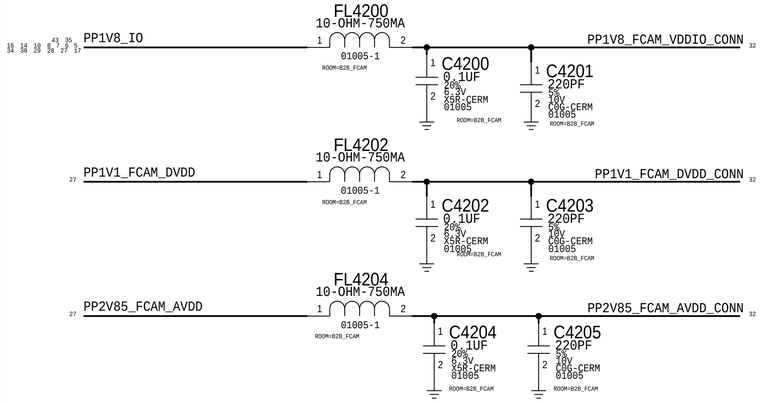

FCAM I/O

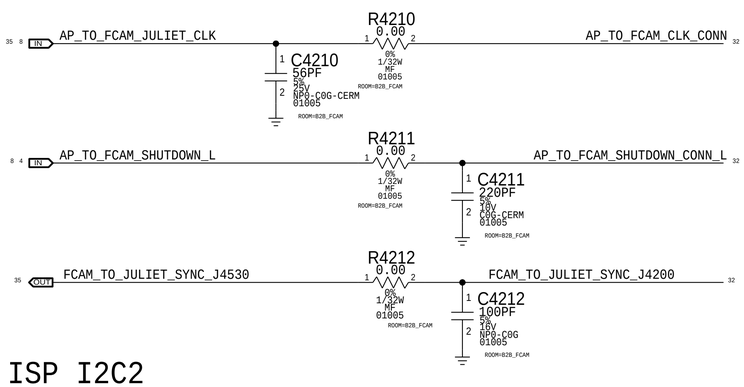

ISP I2C2

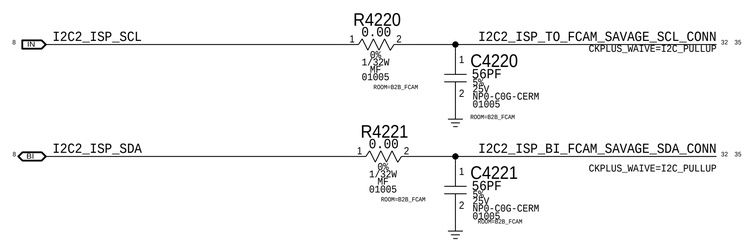

FCAM Connector

Rcpt: 516S00244 <-- This one on MLB
Plug: 516S00245

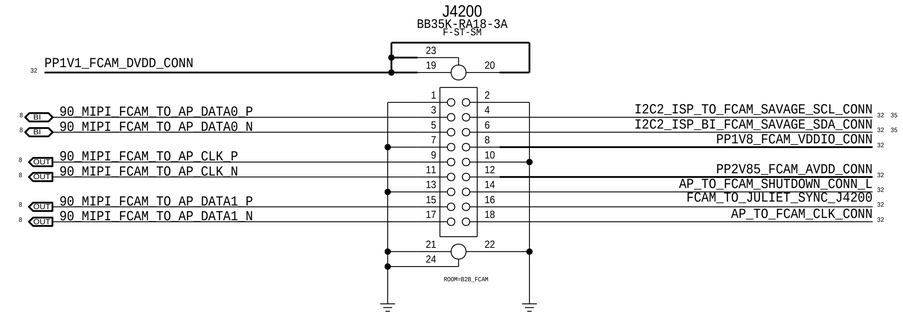

PAGE TITLE	CAMERA: B2B FCAM
Apple Inc.	DRAWING NUMBER 051-02221 SIZE D
	REVISION 9.0.0
	BRANCH evt-1
	PAGE 42 OF 80
	SHEET 32 OF 51

NOTICE OF PROPRIETARY PROPERTY:
THE INFORMATION CONTAINED HEREIN IS THE PROPRIETARY PROPERTY OF APPLE INC.
THE POSESSOR AGREES TO THE FOLLOWING:
I TO MAINTAIN THIS DOCUMENT IN CONFIDENCE
II NOT TO REPRODUCE OR COPY IT
III NOT TO REVEAL OR PUBLISH IT IN WHOLE OR PART
IV ALL RIGHTS RESERVED

HAWKING

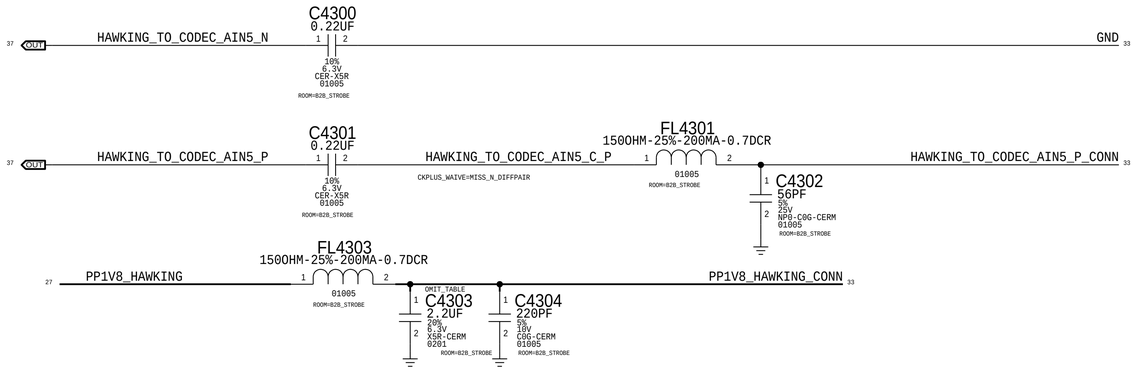

MIC2 (ANC REF)

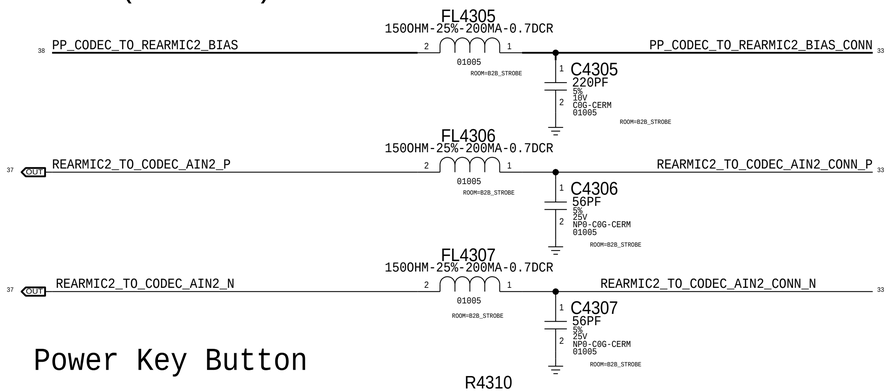

Power Key Button

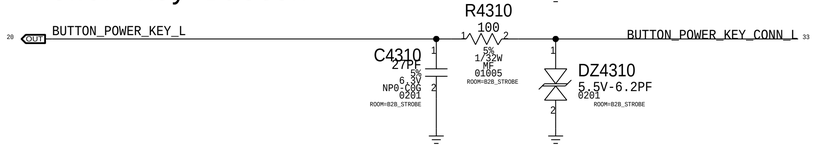

Strobe Connector

Rcpt: 516S00267 <-- This one on MLB
Plug: 516S00268

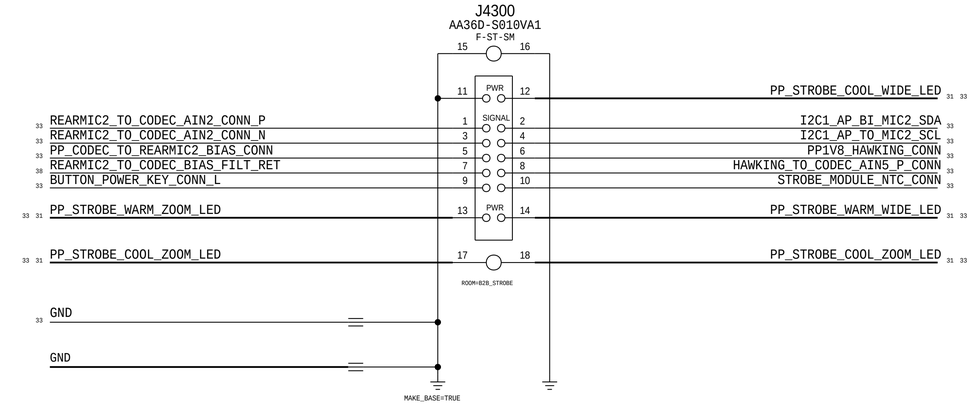

Strobe Filtering

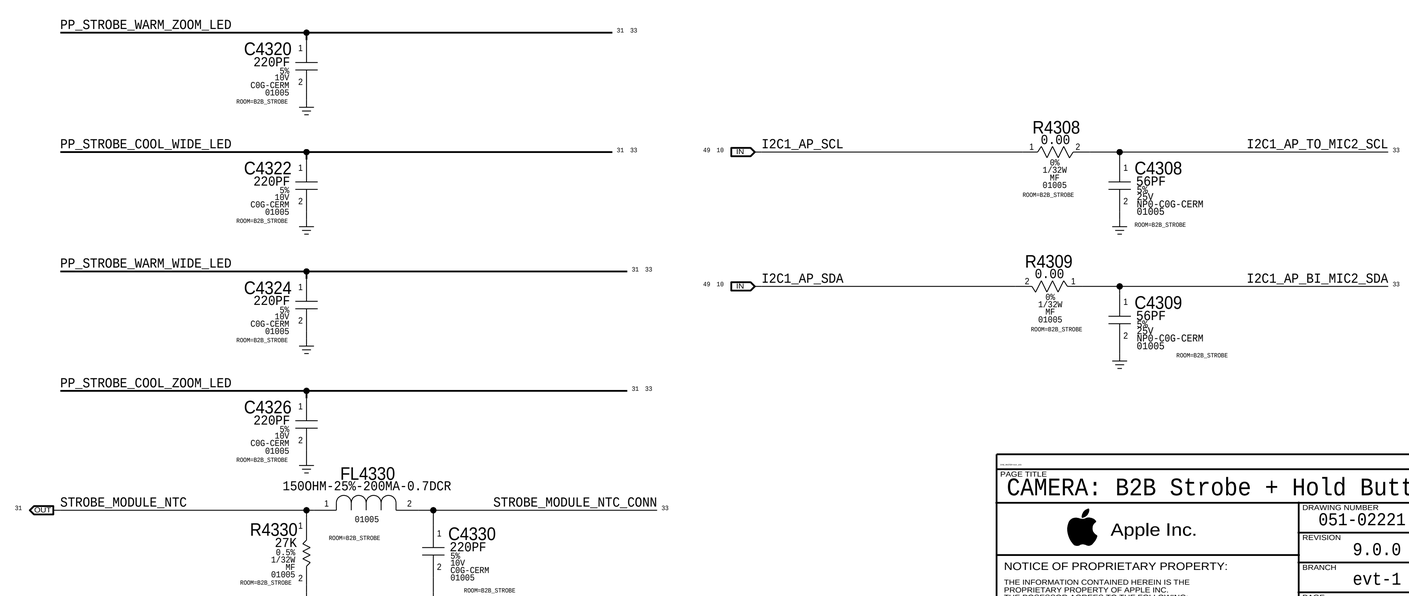

PAGE TITLE
CAMERA: B2B Strobe + Hold Button

Apple Inc.

DRAWING NUMBER	051-02221
SIZE	D
REVISION	9.0.0
BRANCH	evt-1
PAGE	43 OF 80
SHEET	33 OF 51

NOTICE OF PROPRIETARY PROPERTY:
THE INFORMATION CONTAINED HEREIN IS THE PROPRIETARY PROPERTY OF APPLE INC.
THE POSESSOR AGREES TO THE FOLLOWING:
I TO MAINTAIN THIS DOCUMENT IN CONFIDENCE
II NOT TO REPRODUCE OR COPY IT
III NOT TO REVEAL OR PUBLISH IT IN WHOLE OR PART
IV ALL RIGHTS RESERVED

Rigel Driver

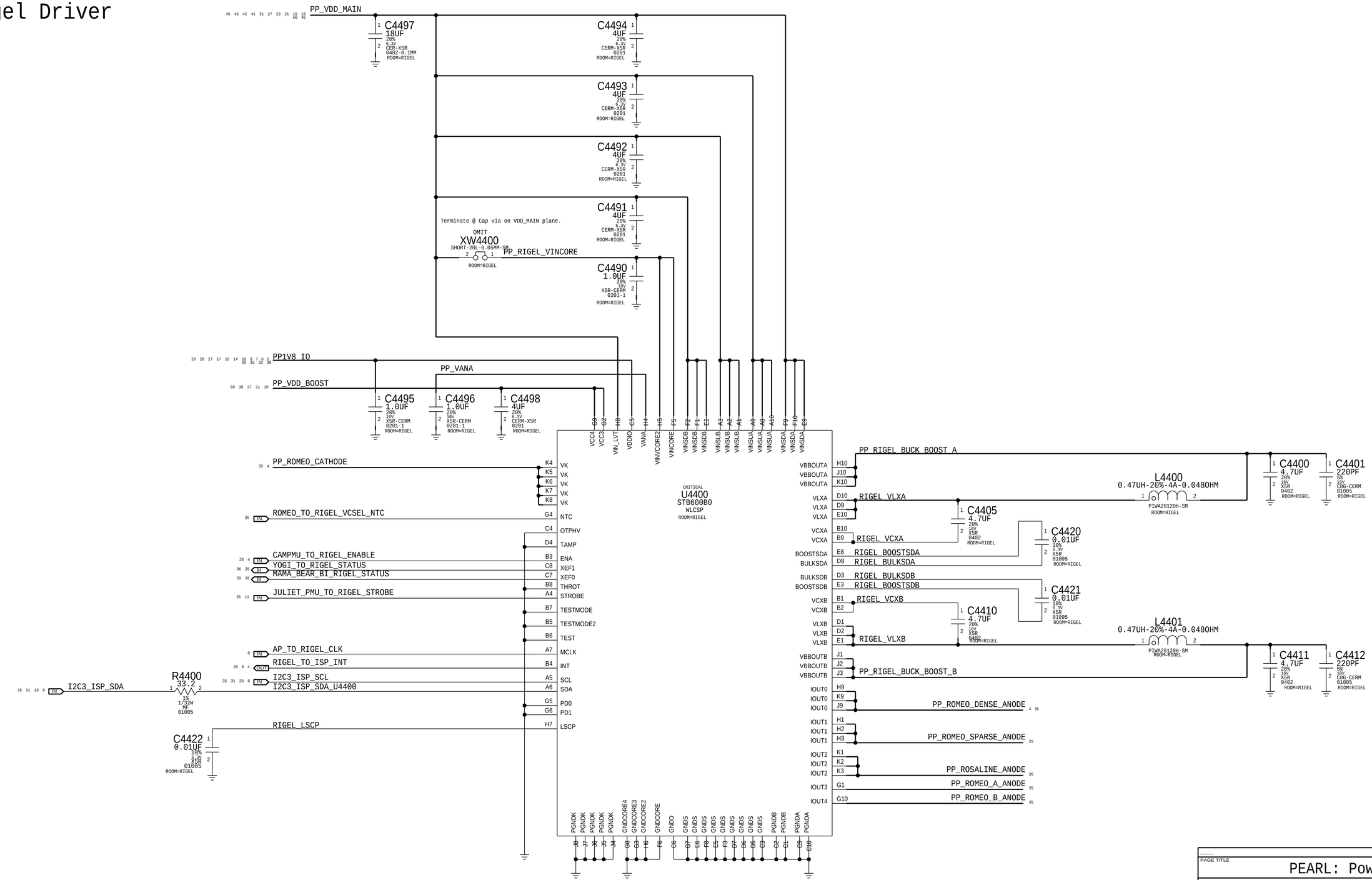

PAGE TITLE

PEARL: Power

Apple Inc.

DRAWING NUMBER	051-02221
SIZE	D
REVISION	9.0.0
BRANCH	evt-1
PAGE	44 OF 80
SHEET	34 OF 51

NOTICE OF PROPRIETARY PROPERTY:

THE INFORMATION CONTAINED HEREIN IS THE PROPRIETARY PROPERTY OF APPLE INC.
THE POSESSOR AGREES TO THE FOLLOWING:

I TO MAINTAIN THIS DOCUMENT IN CONFIDENCE

II NOT TO REPRODUCE OR COPY IT

III NOT TO REVEAL OR PUBLISH IT IN WHOLE OR PART

IV ALL RIGHTS RESERVED

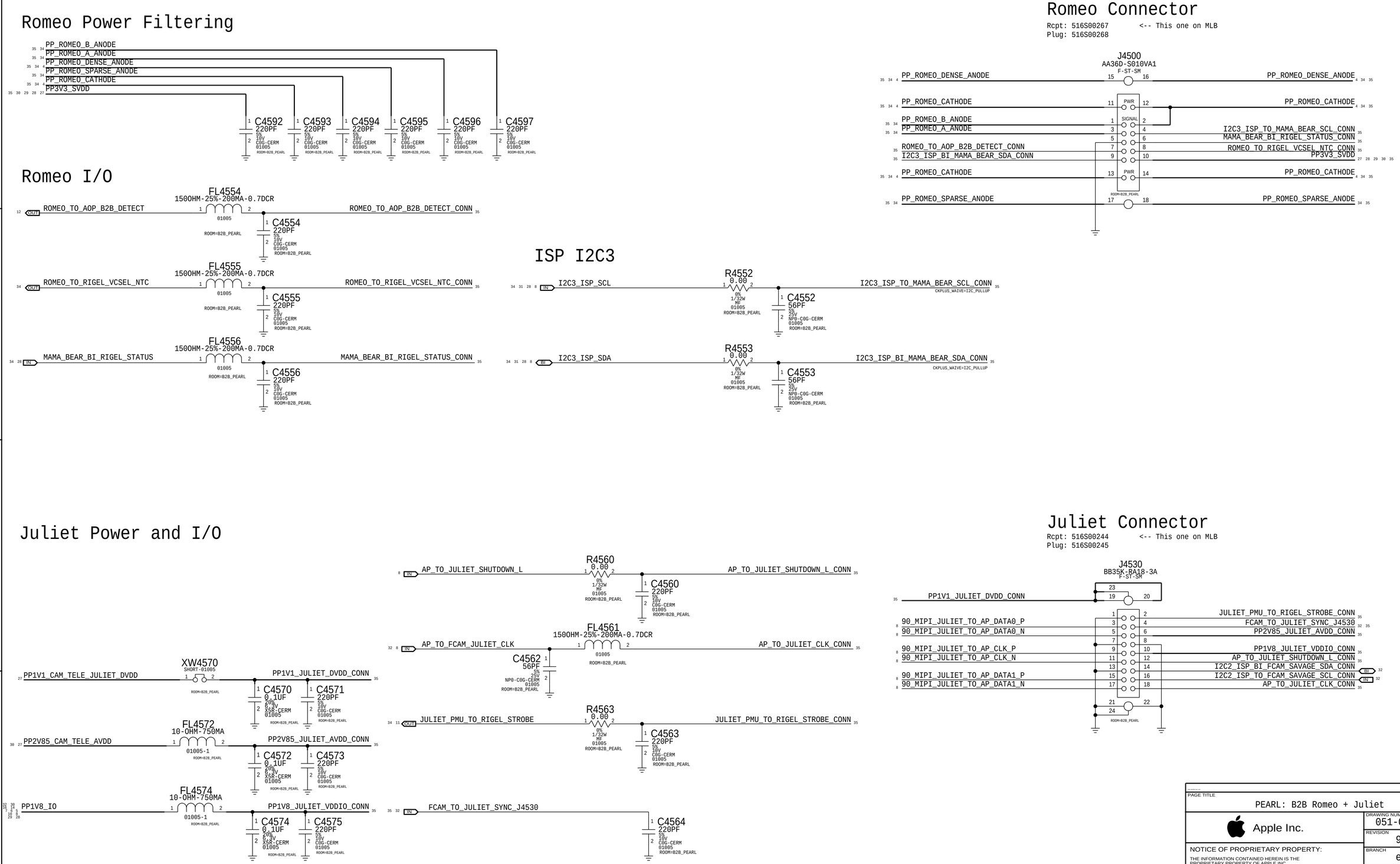
Romeo Power Filtering
PP_ROMEO_B_ANODE
PP_ROMEO_A_ANODE
PP_ROMEO_DENSE_ANODE
PP_ROMEO_SPARSE_ANODE
PP_ROMEO_CATHODE
PP3V3_SVDD
C4592 220PF
C4593 220PF
C4594 220PF
C4595 220PF
C4596 220PF
C4597 220PF
Romeo Connector
Rcpt: 516S00267 <-- This one on MLB
Plug: 516S00268
J4500
AA36D-S010VA1
F-ST-SM
PP_ROMEO_DENSE_ANODE
PP_ROMEO_CATHODE
PP_ROMEO_B_ANODE
PP_ROMEO_A_ANODE
ROMEO_TO_AOP_B2B_DETECT_CONN
I2C3_ISP_BI_MAMA_BEAR_SDA_CONN
PP_ROMEO_SPARSE_ANODE
I2C3_ISP_TO_MAMA_BEAR_SCL_CONN
MAMA_BEAR_BI_RIGEL_STATUS_CONN
ROMEO_TO_RIGEL_VCSEL_NTC_CONN
PP3V3_SVDD
Romeo I/O
FL4554 150OHM-25%-200MA-0.7DCR
ROMEO_TO_AOP_B2B_DETECT
ROMEO_TO_AOP_B2B_DETECT_CONN
C4554 220PF
FL4555 150OHM-25%-200MA-0.7DCR
ROMEO_TO_RIGEL_VCSEL_NTC
ROMEO_TO_RIGEL_VCSEL_NTC_CONN
C4555 220PF
FL4556 150OHM-25%-200MA-0.7DCR
MAMA_BEAR_BI_RIGEL_STATUS
MAMA_BEAR_BI_RIGEL_STATUS_CONN
C4556 220PF
ISP I2C3
I2C3_ISP_SCL
R4552 0.00
I2C3_ISP_TO_MAMA_BEAR_SCL_CONN
C4552 56PF
I2C3_ISP_SDA
R4553 0.00
I2C3_ISP_BI_MAMA_BEAR_SDA_CONN
C4553 56PF
Juliet Power and I/O
XW4570 SHORT-01005
PP1V1_CAM_TELE_JULIET_DVDD
PP1V1_JULIET_DVDD_CONN
C4570 0.1UF
C4571 220PF
FL4572 10-OHM-750MA
PP2V85_CAM_TELE_AVDD
PP2V85_JULIET_AVDD_CONN
C4572 0.1UF
C4573 220PF
FL4574 10-OHM-750MA
PP1V8_IO
PP1V8_JULIET_VDDIO_CONN
C4574 0.1UF
C4575 220PF
AP_TO_JULIET_SHUTDOWN_L
R4560 0.00
AP_TO_JULIET_SHUTDOWN_L_CONN
C4560 220PF
FL4561 150OHM-25%-200MA-0.7DCR
AP_TO_FCAM_JULIET_CLK
AP_TO_JULIET_CLK_CONN
C4562 56PF
JULIET_PMU_TO_RIGEL_STROBE
R4563 0.00
JULIET_PMU_TO_RIGEL_STROBE_CONN
C4563 220PF
FCAM_TO_JULIET_SYNC_J4530
C4564 220PF
Juliet Connector
Rcpt: 516S00244 <-- This one on MLB
Plug: 516S00245
J4530
BB35K-RA18-3A
F-ST-SM
PP1V1_JULIET_DVDD_CONN
90_MIPI_JULIET_TO_AP_DATA0_P
90_MIPI_JULIET_TO_AP_DATA0_N
90_MIPI_JULIET_TO_AP_CLK_P
90_MIPI_JULIET_TO_AP_CLK_N
90_MIPI_JULIET_TO_AP_DATA1_P
90_MIPI_JULIET_TO_AP_DATA1_N
JULIET_PMU_TO_RIGEL_STROBE_CONN
FCAM_TO_JULIET_SYNC_J4530
PP2V85_JULIET_AVDD_CONN
PP1V8_JULIET_VDDIO_CONN
AP_TO_JULIET_SHUTDOWN_L_CONN
I2C2_ISP_BI_FCAM_SAVAGE_SDA_CONN
I2C2_ISP_TO_FCAM_SAVAGE_SCL_CONN
AP_TO_JULIET_CLK_CONN
PAGE TITLE
PEARL: B2B Romeo + Juliet
Apple Inc.
DRAWING NUMBER 051-02221
SIZE D
REVISION 9.0.0
BRANCH evt-1
PAGE 45 OF 80
SHEET 35 OF 51
NOTICE OF PROPRIETARY PROPERTY:
THE INFORMATION CONTAINED HEREIN IS THE PROPRIETARY PROPERTY OF APPLE INC.
THE POSESSOR AGREES TO THE FOLLOWING:
I TO MAINTAIN THIS DOCUMENT IN CONFIDENCE
II NOT TO REPRODUCE OR COPY IT
III NOT TO REVEAL OR PUBLISH IT IN WHOLE OR PART
IV ALL RIGHTS RESERVED

AOP I2C

12 IN I2C0_AOP_SCL — R4600 0.00 (0% 1/32W MF 01005 ROOM=B2B_PEARL) — C4600 56PF (5% 25V NPO-C0G-CERM 01005 ROOM=B2B_PEARL) — I2C0_AOP_TO_PROX_ALS_YOGI_SCL_CONN 36 (CKPLUS_WAIVE=I2C_PULLUP)

12 BI I2C0_AOP_SDA — R4601 0.00 (0% 1/32W MF 01005 ROOM=B2B_PEARL) — C4601 56PF (5% 25V NPO-C0G-CERM 01005 ROOM=B2B_PEARL) — I2C0_AOP_BI_PROX_ALS_YOGI_SDA_CONN 36 (CKPLUS_WAIVE=I2C_PULLUP)

Yogi Signals

34 28 BI YOGI_TO_RIGEL_STATUS — FL4650 1500HM-25%-200MA-0.7DCR (01005 ROOM=B2B_PEARL) — C4650 220PF (5% 10V C0G-CERM 01005 ROOM=B2B_PEARL) — YOGI_TO_RIGEL_STATUS_CONN 36

Rosaline + Misc Connector

Rcpt: 516S00325 <-- This one on MLB
Plug: 516S00326

J4600 AA26DK-S028VA1 F-ST-SM

38 FRONTMIC3_TO_CODEC_BIAS_FILT_RET — XW4600 (ROOM=B2B_PEARL OMIT SHORT-20L-0.05MM-SM) — J4600 pin 29

36 FRONTMIC3_TO_CODEC_AIN3_CONN_N — J4600 pin 1 — FRONTMIC3_TO_CODEC_AIN3_CONN_P 36
36 PP3V0_YOGI_PROX_ALS_CONN — J4600 pin 3 — PP_CODEC_TO_FRONTMIC3_BIAS_CONN 36
J4600 pin 5 — YOGI_TO_RIGEL_STATUS_CONN 36
J4600 pin 7 — PROX_BI_AP_AOP_INT_CONN_L 36
J4600 pin 9 — I2C0_AOP_BI_PROX_ALS_YOGI_SDA_CONN 36
J4600 pin 11 — I2C0_AOP_TO_PROX_ALS_YOGI_SCL_CONN 36
J4600 pin 13 — ALS_TO_AOP_INT_CONN_L 36
36 34 PP_ROSALINE_ANODE — J4600 pin 17 — PP_ROSALINE_ANODE 34 36
J4600 pin 19 — BB_TO_STROBE_DRIVER_GSM_BURST_IND_CONN 36
36 COIL_TO_SPKRAMP_TOP_VSENSE_POS_CONN — J4600 pin 21 — COIL_TO_SPKRAMP_TOP_VSENSE_NEG_CONN 36
50 36 SPKRAMP_TOP_TO_COIL_OUT_NEG — J4600 pin 25 — SPKRAMP_TOP_TO_COIL_OUT_NEG 36 50
36 CODEC_AOUT_TO_HAC_CONN_P — J4600 pin 27 — CODEC_AOUT_TO_HAC_CONN_N 36
50 36 SPKRAMP_TOP_TO_COIL_OUT_POS — J4600 pin 31 — SPKRAMP_TOP_TO_COIL_OUT_POS 36 50
J4600 pin 34 (ROOM=B2B_PEARL)

SPEAKER2

50 36 IN SPKRAMP_TOP_TO_COIL_OUT_POS — C4631 220PF (5% 10V C0G-CERM 01005 ROOM=B2B_PEARL) — C4635 820PF (10% 10V X5R 01005 ROOM=B2B_PEARL) — C4630 220PF (5% 10V C0G-CERM 01005 ROOM=B2B_PEARL)

50 36 IN SPKRAMP_TOP_TO_COIL_OUT_NEG — C4636 820PF (10% 10V X5R 01005 ROOM=B2B_PEARL) — C4632 220PF (5% 10V C0G-CERM 01005 ROOM=B2B_PEARL)

50 OUT COIL_TO_SPKRAMP_TOP_VSENSE_POS — C4633 220PF (NOSTUFF 5% 10V C0G-CERM 01005 ROOM=B2B_PEARL) — R4633 0.00 (0% 1/32W MF 01005 ROOM=B2B_PEARL) — COIL_TO_SPKRAMP_TOP_VSENSE_POS_CONN 36

PP_ROSALINE_ANODE 34 36 — C4660 220PF (5% 10V C0G-CERM 01005 ROOM=B2B_PEARL)

50 OUT COIL_TO_SPKRAMP_TOP_VSENSE_NEG — C4634 220PF (NOSTUFF 5% 10V C0G-CERM 01005 ROOM=B2B_PEARL) — R4634 0.00 (0% 1/32W MF 01005 ROOM=B2B_PEARL) — COIL_TO_SPKRAMP_TOP_VSENSE_NEG_CONN 36

MIC3

38 PP_CODEC_TO_FRONTMIC3_BIAS — FL4640 1500HM-25%-200MA-0.7DCR (01005 ROOM=B2B_PEARL) — PP_CODEC_TO_FRONTMIC3_BIAS_CONN 36 — DZ4640 6.8V-100PF (01005 ROOM=B2B_PEARL)

37 OUT FRONTMIC3_TO_CODEC_AIN3_N — FL4641 1500HM-25%-200MA-0.7DCR (01005 ROOM=B2B_PEARL) — FRONTMIC3_TO_CODEC_AIN3_CONN_N 36 — DZ4641 6.8V-100PF (01005 ROOM=B2B_PEARL)

37 OUT FRONTMIC3_TO_CODEC_AIN3_P — FL4642 1500HM-25%-200MA-0.7DCR (01005 ROOM=B2B_PEARL) — FRONTMIC3_TO_CODEC_AIN3_CONN_P 36 — DZ4642 6.8V-100PF (01005 ROOM=B2B_PEARL)

37 OUT CODEC_AOUT_TO_HAC_P — FL4643 1500HM-25%-200MA-0.7DCR (01005 ROOM=B2B_PEARL) — CODEC_AOUT_TO_HAC_CONN_P 36 — DZ4643 6.8V-100PF (01005 ROOM=B2B_PEARL)

37 OUT CODEC_AOUT_TO_HAC_N — FL4644 1500HM-25%-200MA-0.7DCR (01005 ROOM=B2B_PEARL) — CODEC_AOUT_TO_HAC_CONN_N 36 — DZ4644 6.8V-100PF (01005 ROOM=B2B_PEARL)

PROX & ALS POWER

48 47 45 13 50 PP3V0_S2 — R4611 0.00 (0% 1/32W MF 01005 ROOM=B2B_PEARL) — C4613 2.2UF (OMIT TABLE 20% 6.3V X5R-CERM 0201 ROOM=B2B_PEARL) — C4614 220PF (5% 10V C0G-CERM 01005 ROOM=B2B_PEARL) — PP3V0_YOGI_PROX_ALS_CONN 36

PROX/ALS I/O

12 BI PROX_BI_AP_AOP_INT_L — R4617 240 (1% 1/32W MF 01005 ROOM=B2B_PEARL) — C4617 220PF (5% 10V C0G-CERM 01005 ROOM=B2B_PEARL) — PROX_BI_AP_AOP_INT_CONN_L 36

12 OUT ALS_TO_AOP_INT_L — FL4618 1500HM-25%-200MA-0.7DCR (01005 ROOM=B2B_PEARL) — C4618 220PF (5% 10V C0G-CERM 01005 ROOM=B2B_PEARL) — ALS_TO_AOP_INT_CONN_L 36

50 31 IN BB_TO_STROBE_DRIVER_GSM_BURST_IND — FL4619 NOSTUFF 1500HM-25%-200MA-0.7DCR (01005 ROOM=B2B_PEARL) — BB_TO_STROBE_DRIVER_GSM_BURST_IND_CONN 36 — R4619 0.00 (0% 1/32W MF 01005 ROOM=B2B_PEARL)

PAGE TITLE	PEARL: B2B Rosaline + Misc
Apple Inc.	DRAWING NUMBER 051-02221 — SIZE D
	REVISION 9.0.0
	BRANCH evt-1
	PAGE 46 OF 80
	SHEET 36 OF 51

NOTICE OF PROPRIETARY PROPERTY:
THE INFORMATION CONTAINED HEREIN IS THE PROPRIETARY PROPERTY OF APPLE INC.
THE POSESSOR AGREES TO THE FOLLOWING:
I TO MAINTAIN THIS DOCUMENT IN CONFIDENCE
II NOT TO REPRODUCE OR COPY IT
III NOT TO REVEAL OR PUBLISH IT IN WHOLE OR PART
IV ALL RIGHTS RESERVED

CALLAN AUDIO CODEC (ANALOG INPUTS & OUTPUTS)

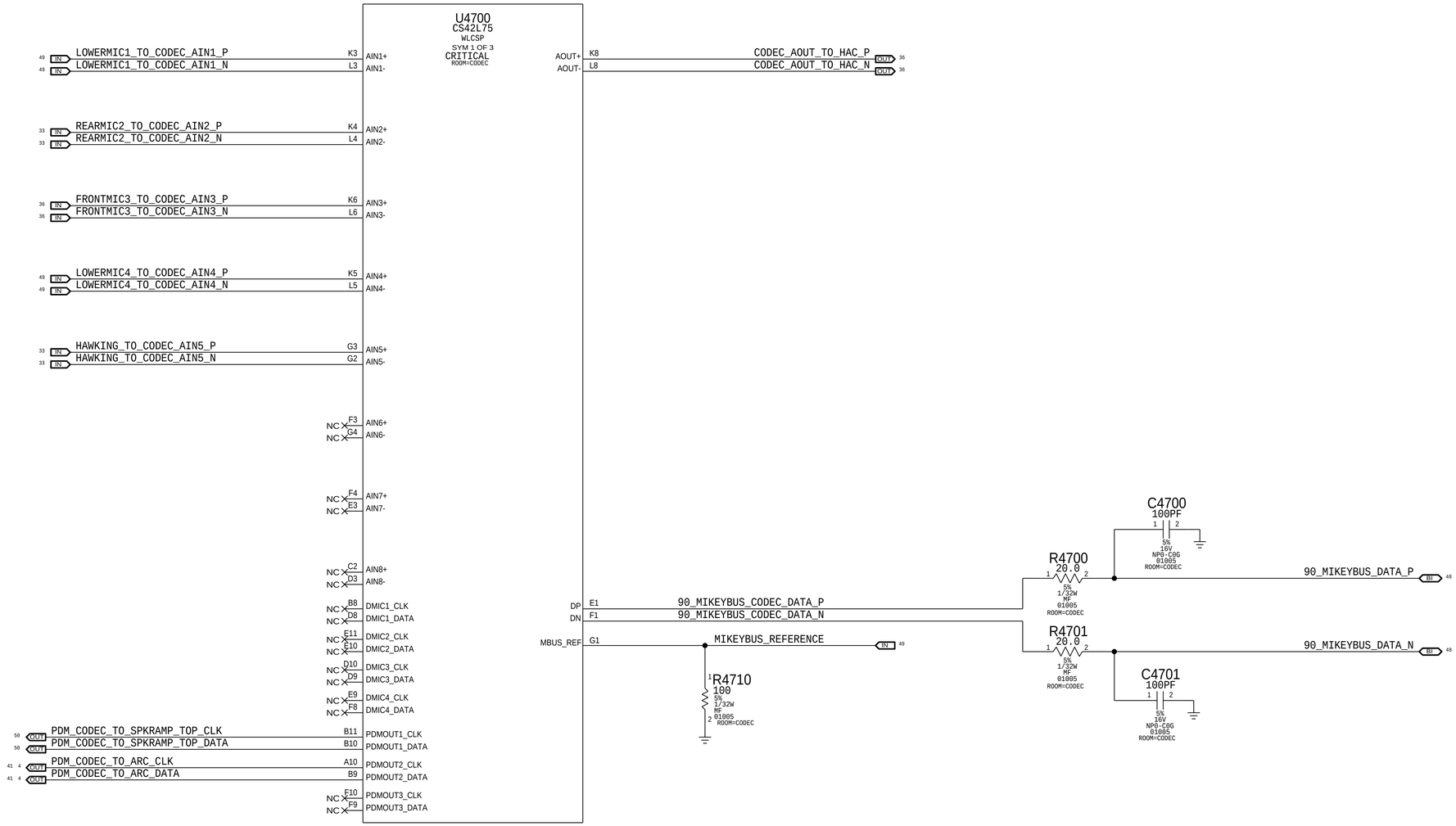

PAGE TITLE

AUDIO: CODEC (1/2)

Apple Inc.

DRAWING NUMBER	051-02221
SIZE	D
REVISION	9.0.0
BRANCH	evt-1
PAGE	47 OF 80
SHEET	37 OF 51

NOTICE OF PROPRIETARY PROPERTY:

THE INFORMATION CONTAINED HEREIN IS THE PROPRIETARY PROPERTY OF APPLE INC.
THE POSESSOR AGREES TO THE FOLLOWING:

I TO MAINTAIN THIS DOCUMENT IN CONFIDENCE

II NOT TO REPRODUCE OR COPY IT

III NOT TO REVEAL OR PUBLISH IT IN WHOLE OR PART

IV ALL RIGHTS RESERVED

CALLAN AUDIO CODEC (POWER & I/O)

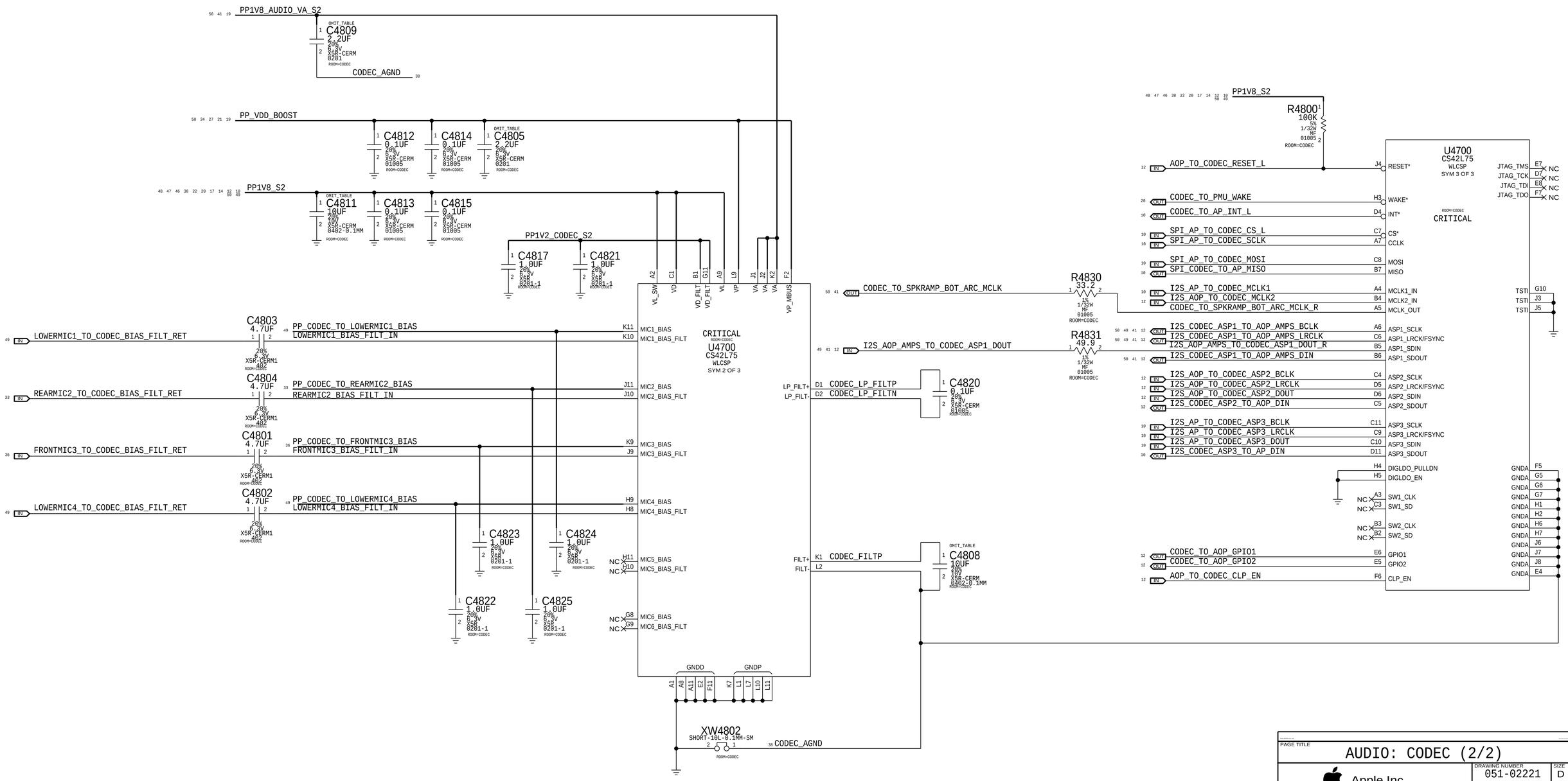

PAGE TITLE

AUDIO: CODEC (2/2)

Apple Inc.

DRAWING NUMBER 051-02221

SIZE D

REVISION 9.0.0

BRANCH evt-1

PAGE 48 OF 80

SHEET 38 OF 51

NOTICE OF PROPRIETARY PROPERTY:

THE INFORMATION CONTAINED HEREIN IS THE PROPRIETARY PROPERTY OF APPLE INC.
THE POSESSOR AGREES TO THE FOLLOWING:

I TO MAINTAIN THIS DOCUMENT IN CONFIDENCE

II NOT TO REPRODUCE OR COPY IT

III NOT TO REVEAL OR PUBLISH IT IN WHOLE OR PART

IV ALL RIGHTS RESERVED

South Speaker Amplifier on MLB Bottom

SYNC_DATE=08/25/2015

PAGE TITLE
AUDIO: Speaker Amp Bottom

Apple Inc.

DRAWING NUMBER 051-02221
SIZE D
REVISION 9.0.0
BRANCH evt-1
PAGE 49 OF 80
SHEET 39 OF 51

NOTICE OF PROPRIETARY PROPERTY:
THE INFORMATION CONTAINED HEREIN IS THE PROPRIETARY PROPERTY OF APPLE INC.
THE POSESSOR AGREES TO THE FOLLOWING:
I TO MAINTAIN THIS DOCUMENT IN CONFIDENCE
II NOT TO REPRODUCE OR COPY IT
III NOT TO REVEAL OR PUBLISH IT IN WHOLE OR PART
IV ALL RIGHTS RESERVED

North Speaker Amplifier on MLB Bottom

SYNC_DATE=08/25/2015

PAGE TITLE
AUDIO: Speaker Amp Top

Apple Inc.

DRAWING NUMBER 051-02221
SIZE D
REVISION 9.0.0
BRANCH evt-1
PAGE 50 OF 80
SHEET 40 OF 51

NOTICE OF PROPRIETARY PROPERTY:
THE INFORMATION CONTAINED HEREIN IS THE PROPRIETARY PROPERTY OF APPLE INC.
THE POSESSOR AGREES TO THE FOLLOWING:
I TO MAINTAIN THIS DOCUMENT IN CONFIDENCE
II NOT TO REPRODUCE OR COPY IT
III NOT TO REVEAL OR PUBLISH IT IN WHOLE OR PART
IV ALL RIGHTS RESERVED

ARC DRIVER

APN: 338S00296
I2C ADDRESS: 1000 001x
0x82

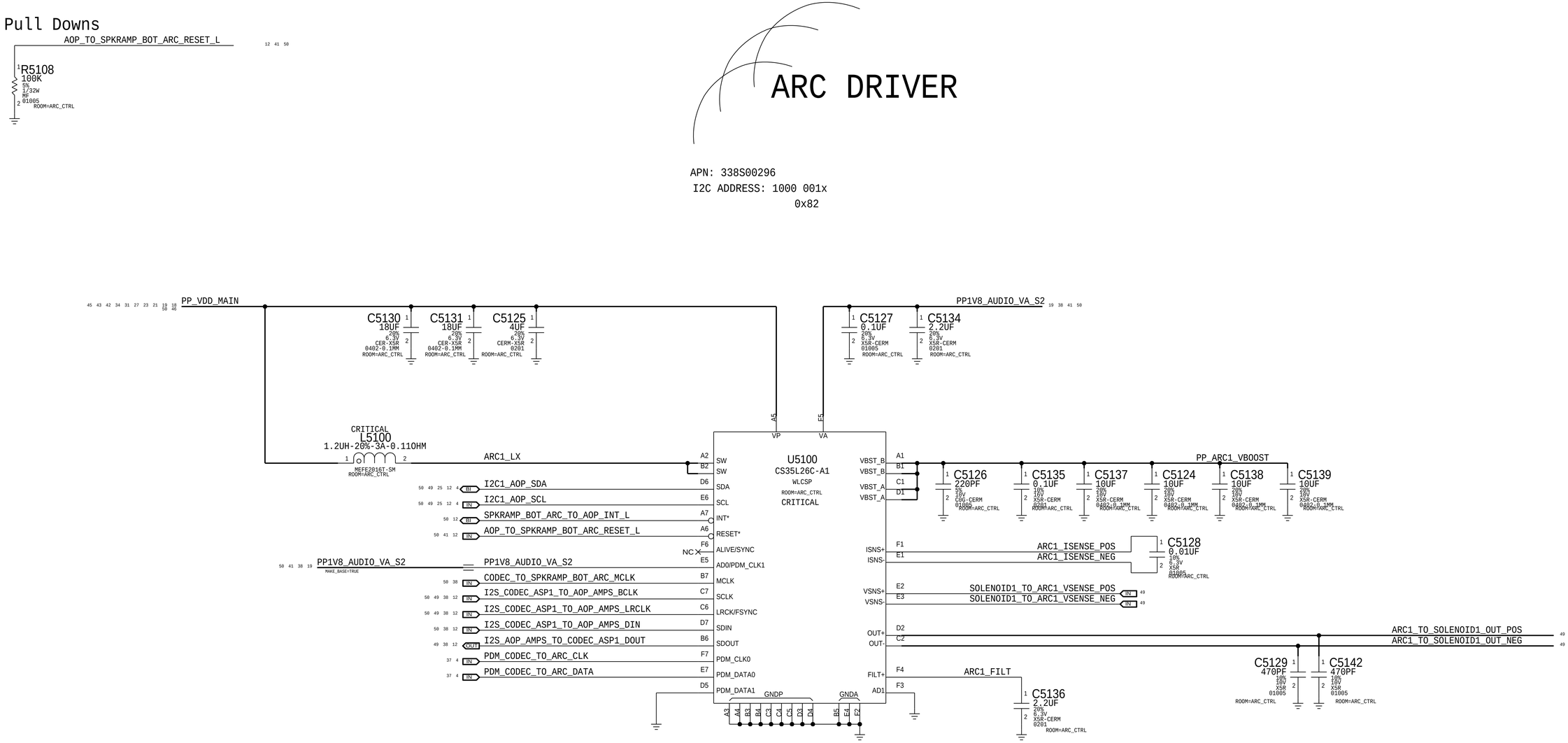

PAGE TITLE
ARC: Driver

Apple Inc.

DRAWING NUMBER 051-02221
SIZE D
REVISION 9.0.0
BRANCH evt-1
PAGE 51 OF 80
SHEET 41 OF 51

NOTICE OF PROPRIETARY PROPERTY:
THE INFORMATION CONTAINED HEREIN IS THE PROPRIETARY PROPERTY OF APPLE INC.
THE POSESSOR AGREES TO THE FOLLOWING:
I TO MAINTAIN THIS DOCUMENT IN CONFIDENCE
II NOT TO REPRODUCE OR COPY IT
III NOT TO REVEAL OR PUBLISH IT IN WHOLE OR PART
IV ALL RIGHTS RESERVED

Acorn PMU

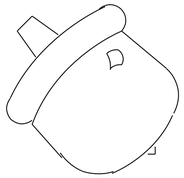

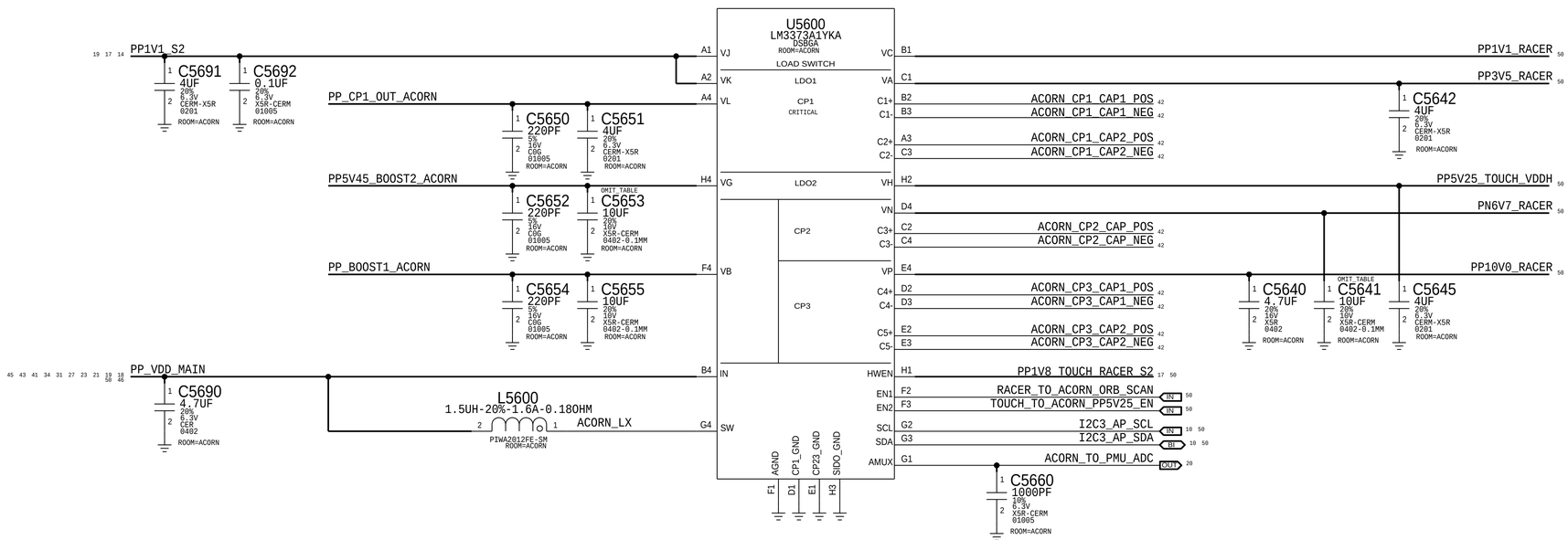

Charge Pump 1 Caps

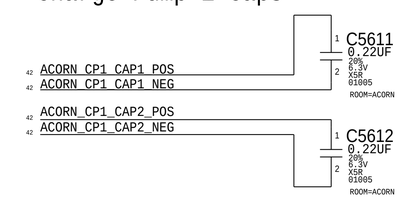

Charge Pump 2 Caps

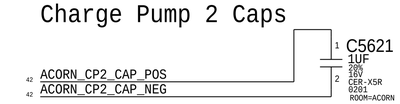

Charge Pump 3 Caps

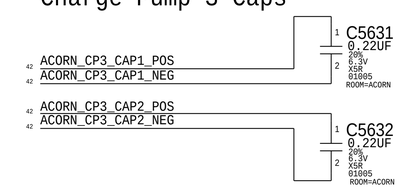

PAGE TITLE
CG: Power Supplies - Touch & Display

Apple Inc.

DRAWING NUMBER 051-02221 SIZE D
REVISION 9.0.0
BRANCH evt-1
PAGE 56 OF 80
SHEET 42 OF 51

NOTICE OF PROPRIETARY PROPERTY:
THE INFORMATION CONTAINED HEREIN IS THE PROPRIETARY PROPERTY OF APPLE INC.
THE POSESSOR AGREES TO THE FOLLOWING:
I TO MAINTAIN THIS DOCUMENT IN CONFIDENCE
II NOT TO REPRODUCE OR COPY IT
III NOT TO REVEAL OR PUBLISH IT IN WHOLE OR PART
IV ALL RIGHTS RESERVED

Display Control Signals

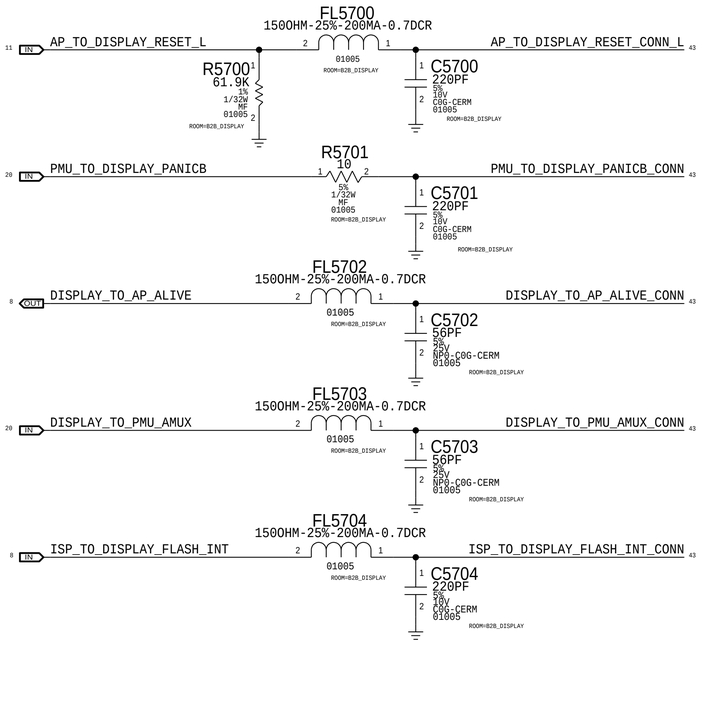

Display Flex Connector

Rcpt: 516S00210 <-- This one on MLB
Plug: 516S00211

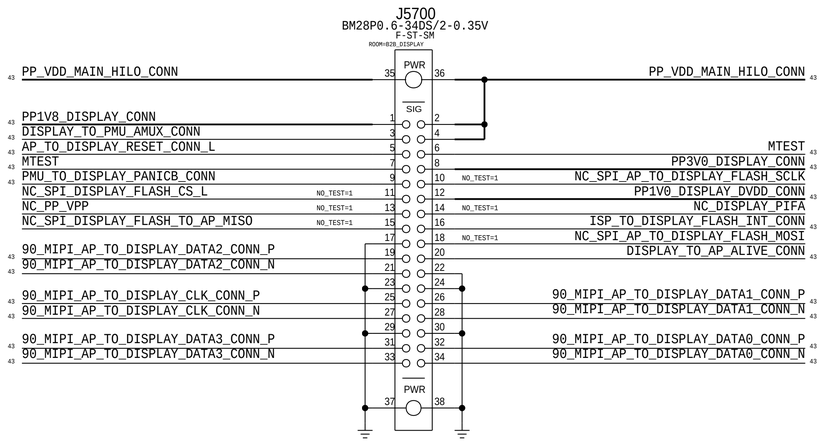

Display MIPI

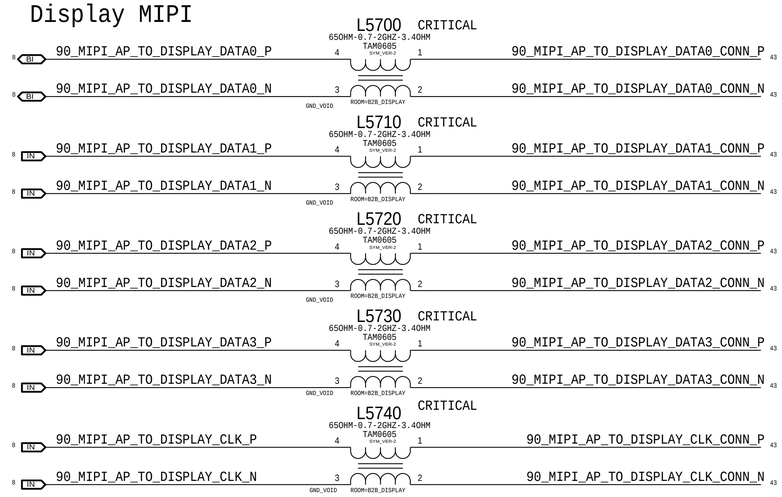

Display Power

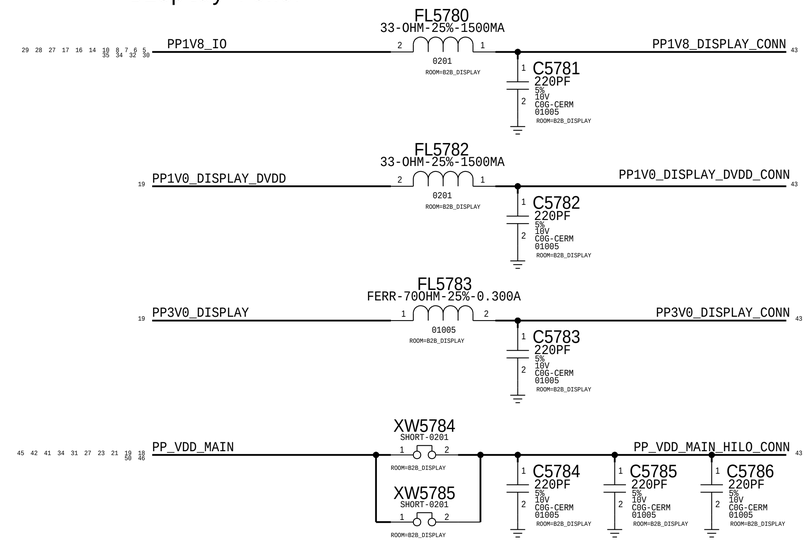

PAGE TITLE	CG: B2B Display
Apple Inc.	DRAWING NUMBER 051-02221 SIZE D
	REVISION 9.0.0
	BRANCH evt-1
	PAGE 57 OF 80
	SHEET 43 OF 51

NOTICE OF PROPRIETARY PROPERTY:
THE INFORMATION CONTAINED HEREIN IS THE PROPRIETARY PROPERTY OF APPLE INC.
THE POSESSOR AGREES TO THE FOLLOWING:
I TO MAINTAIN THIS DOCUMENT IN CONFIDENCE
II NOT TO REPRODUCE OR COPY IT
III NOT TO REVEAL OR PUBLISH IT IN WHOLE OR PART
IV ALL RIGHTS RESERVED

Orb + Touch Connector on MLB Bottom

SYNC_DATE=08/25/2015

PAGE TITLE
CG: B2B Orb & Touch

Apple Inc.

DRAWING NUMBER 051-02221
SIZE D
REVISION 9.0.0
BRANCH evt-1
PAGE 58 OF 80
SHEET 44 OF 51

NOTICE OF PROPRIETARY PROPERTY:
THE INFORMATION CONTAINED HEREIN IS THE PROPRIETARY PROPERTY OF APPLE INC.
THE POSESSOR AGREES TO THE FOLLOWING:
I TO MAINTAIN THIS DOCUMENT IN CONFIDENCE
II NOT TO REPRODUCE OR COPY IT
III NOT TO REVEAL OR PUBLISH IT IN WHOLE OR PART
IV ALL RIGHTS RESERVED

VDD_MAIN OV CUT-OFF CIRCUIT

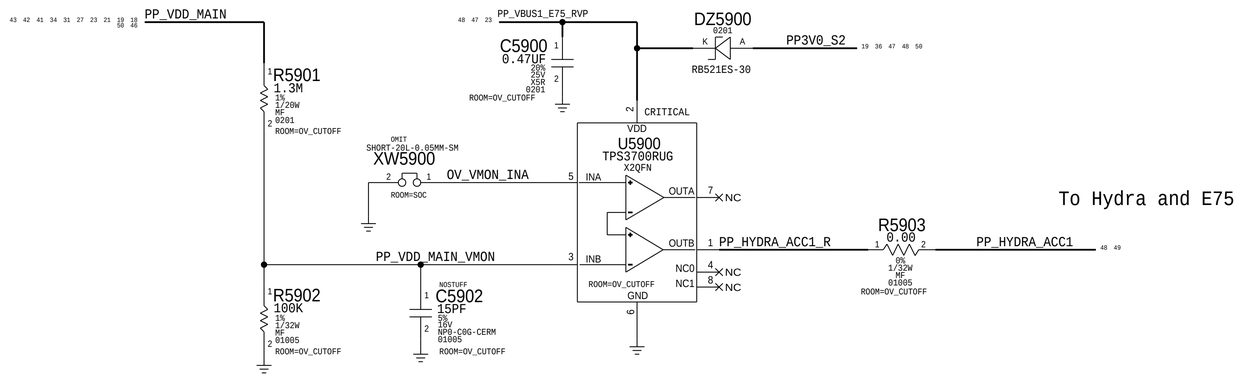

PAGE TITLE
I/O: Overvoltage Cut-Off Circuit

Apple Inc.

DRAWING NUMBER 051-02221 SIZE D
REVISION 9.0.0
BRANCH evt-1
PAGE 59 OF 80
SHEET 45 OF 51

NOTICE OF PROPRIETARY PROPERTY:
THE INFORMATION CONTAINED HEREIN IS THE PROPRIETARY PROPERTY OF APPLE INC.
THE POSESSOR AGREES TO THE FOLLOWING:
I TO MAINTAIN THIS DOCUMENT IN CONFIDENCE
II NOT TO REPRODUCE OR COPY IT
III NOT TO REVEAL OR PUBLISH IT IN WHOLE OR PART
IV ALL RIGHTS RESERVED

ACCESSORY BUCK

I2C ADDRESS: 0x52

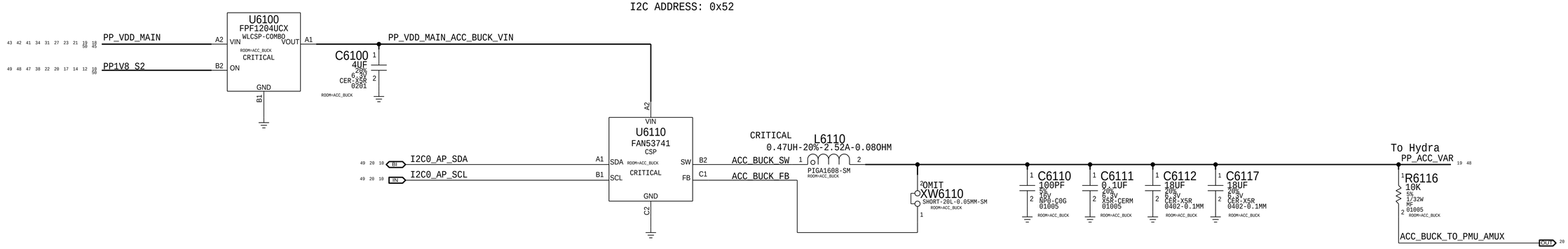

PAGE TITLE

I/O: Accessory Buck

Apple Inc.

DRAWING NUMBER 051-02221

SIZE D

REVISION 9.0.0

BRANCH evt-1

PAGE 61 OF 80

SHEET 46 OF 51

NOTICE OF PROPRIETARY PROPERTY:

THE INFORMATION CONTAINED HEREIN IS THE PROPRIETARY PROPERTY OF APPLE INC.
THE POSESSOR AGREES TO THE FOLLOWING:

I TO MAINTAIN THIS DOCUMENT IN CONFIDENCE

II NOT TO REPRODUCE OR COPY IT

III NOT TO REVEAL OR PUBLISH IT IN WHOLE OR PART

IV ALL RIGHTS RESERVED

USB-PD

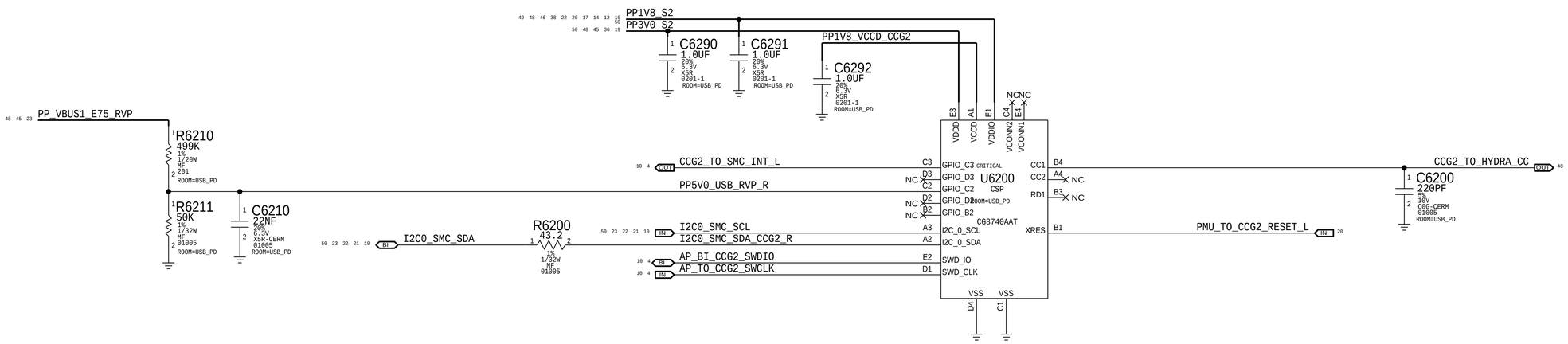

PAGE TITLE

I/O: USB PD

Apple Inc.

DRAWING NUMBER	051-02221
SIZE	D
REVISION	9.0.0
BRANCH	evt-1
PAGE	62 OF 80
SHEET	47 OF 51

NOTICE OF PROPRIETARY PROPERTY:

THE INFORMATION CONTAINED HEREIN IS THE PROPRIETARY PROPERTY OF APPLE INC.
THE POSESSOR AGREES TO THE FOLLOWING:

I TO MAINTAIN THIS DOCUMENT IN CONFIDENCE

II NOT TO REPRODUCE OR COPY IT

III NOT TO REVEAL OR PUBLISH IT IN WHOLE OR PART

IV ALL RIGHTS RESERVED

Hydra

I2C Address: 0011010X

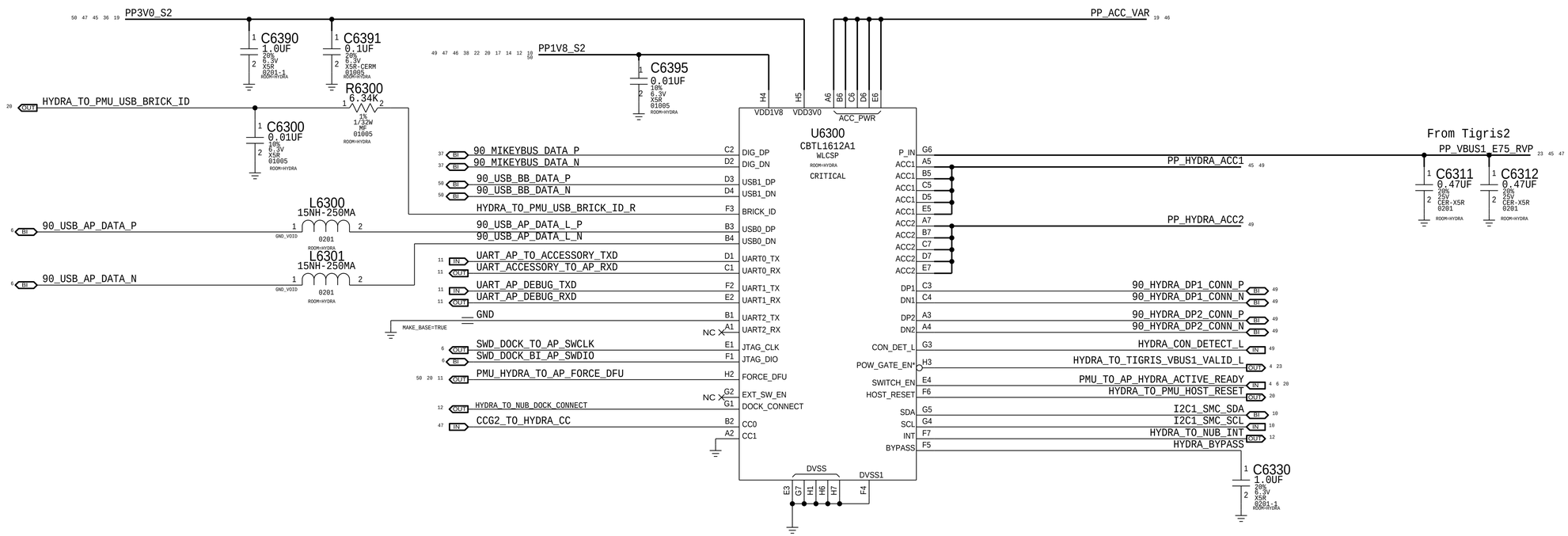

PAGE TITLE

I/O: Hydra

Apple Inc.

DRAWING NUMBER	051-02221
SIZE	D
REVISION	9.0.0
BRANCH	evt-1
PAGE	63 OF 80
SHEET	48 OF 51

NOTICE OF PROPRIETARY PROPERTY:

THE INFORMATION CONTAINED HEREIN IS THE PROPRIETARY PROPERTY OF APPLE INC.
THE POSESSOR AGREES TO THE FOLLOWING:
I TO MAINTAIN THIS DOCUMENT IN CONFIDENCE
II NOT TO REPRODUCE OR COPY IT
III NOT TO REVEAL OR PUBLISH IT IN WHOLE OR PART
IV ALL RIGHTS RESERVED

ARC

FL6400
1500OHM-25%-200MA-0.7DCR
01005
ROOM=B2B_DOCK

PP1V8_S2 → PP1V8_SAKONNET_CONN

C6400 220PF 5% 10V C0G-CERM 01005 ROOM=B2B_DOCK

I2C0_AP_SCL (IN) → I2C0_AP_TO_SAKONNET_SCL_CONN (CKPLUS_WAIVE=I2C_PULLUP)
R6416 0.00 5% 1/32W MF 01005 ROOM=B2B_DOCK
C6416 56PF 5% 25V NP0-C0G-CERM 01005 ROOM=B2B_DOCK

I2C0_AP_SDA (BI) → I2C0_AP_BI_SAKONNET_SDA_CONN (CKPLUS_WAIVE=I2C_PULLUP)
R6418 0.00 5% 1/32W MF 01005 ROOM=B2B_DOCK
C6418 56PF 5% 25V NP0-C0G-CERM 01005 ROOM=B2B_DOCK

I2S_CODEC_ASP1_TO_AOP_AMPS_BCLK (IN) → I2S_CODEC_ASP1_TO_AOP_AMPS_BCLK_CONN
R6419 49.9 1% 1/32W MF 01005 ROOM=B2B_DOCK
C6419 68PF 5% 25V NP0-C0G-CERM 01005 ROOM=B2B_DOCK

I2S_CODEC_ASP1_TO_AOP_AMPS_LRCLK (IN) → I2S_CODEC_ASP1_TO_AOP_AMPS_LRCLK_CONN
R6420 49.9 1% 1/32W MF 01005 ROOM=B2B_DOCK
C6420 68PF 5% 25V NP0-C0G-CERM 01005 ROOM=B2B_DOCK

I2S_AOP_AMPS_TO_CODEC_ASP1_DOUT (BI) → I2S_AOP_AMPS_TO_CODEC_ASP1_DOUT_CONN
R6421 49.9 1% 1/32W MF 01005 ROOM=B2B_DOCK
C6421 68PF 5% 25V NP0-C0G-CERM 01005 ROOM=B2B_DOCK

ARC1_TO_SOLENOID1_OUT_POS
ARC1_TO_SOLENOID1_OUT_NEG

C6472 820PF 10% 10V X5R 01005 ROOM=B2B_DOCK
C6471 220PF 5% 10V C0G-CERM 01005 ROOM=B2B_DOCK
C6470 220PF 5% 10V C0G-CERM 01005 ROOM=B2B_DOCK
C6473 820PF 10% 10V X5R 01005 ROOM=B2B_DOCK

Compass (Dock Flex Location)

FL6430 (NOSTUFF)
1500OHM-25%-200MA-0.7DCR
01005
ROOM=B2B_DOCK

PP1V8_IMU_S2 → PP1V8_IMU_COMPASS_DOCK_CONN

C6430 (NOSTUFF) 220PF 5% 10V C0G-CERM 01005 ROOM=B2B_DOCK

I2C1_AOP_SCL (IN) → I2C1_AOP_TO_COMPASS_SCL_DOCK_CONN (CKPLUS_WAIVE=I2C_PULLUP)
R6431 (NOSTUFF) 0.00 5% 1/32W MF 01005 ROOM=B2B_DOCK
C6431 (NOSTUFF) 56PF 5% 25V NP0-C0G-CERM 01005 ROOM=B2B_DOCK

I2C1_AOP_SDA (BI) → I2C1_AOP_BI_COMPASS_SDA_DOCK_CONN (CKPLUS_WAIVE=I2C_PULLUP)
R6432 (NOSTUFF) 0.00 5% 1/32W MF 01005 ROOM=B2B_DOCK
C6432 (NOSTUFF) 56PF 5% 25V NP0-C0G-CERM 01005 ROOM=B2B_DOCK

FL6433 (NOSTUFF)
1500OHM-25%-200MA-0.7DCR
01005
ROOM=B2B_DOCK

COMPASS_TO_AOP_INT (OUT) → COMPASS_TO_AOP_INT_DOCK_CONN
C6433 (NOSTUFF) 220PF 5% 10V C0G-CERM 01005 ROOM=B2B_DOCK

LOWER MIC1 + LOWER MIC4

FL6450
1500OHM-25%-200MA-0.7DCR
01005
ROOM=B2B_DOCK

LOWERMIC1_TO_CODEC_AIN1_P (OUT) → LOWERMIC1_TO_CODEC_AIN1_CONN_P
C6450 56PF 5% 25V NP0-C0G-CERM 01005 ROOM=B2B_DOCK

FL6452
1500OHM-25%-200MA-0.7DCR
01005
ROOM=B2B_DOCK

LOWERMIC1_TO_CODEC_AIN1_N (OUT) → LOWERMIC1_TO_CODEC_AIN1_CONN_N
C6452 56PF 5% 25V NP0-C0G-CERM 01005 ROOM=B2B_DOCK

FL6454
1500OHM-25%-200MA-0.7DCR
01005
ROOM=B2B_DOCK

PP_CODEC_TO_LOWERMIC1_BIAS → PP_CODEC_TO_LOWERMIC1_BIAS_CONN
C6454 220PF 5% 10V C0G-CERM 01005 ROOM=B2B_DOCK

FL6460
1500OHM-25%-200MA-0.7DCR
01005
ROOM=B2B_DOCK

LOWERMIC4_TO_CODEC_AIN4_P (OUT) → LOWERMIC4_TO_CODEC_AIN4_CONN_P
C6460 56PF 5% 25V NP0-C0G-CERM 01005 ROOM=B2B_DOCK

Hydra

HYDRA_CON_DETECT_L (OUT) → HYDRA_CON_DETECT_CONN_L
R6410 100 5% 1/32W MF 01005 ROOM=B2B_DOCK
C6410 27PF 5% 10V NP0-C0G 01005 ROOM=B2B_DOCK

FL6411
10-OHM-1.1A
01005
ROOM=B2B_DOCK

PP_HYDRA_ACC1 → PP_HYDRA_ACC1_CONN
C6411 220PF 5% 10V C0G-CERM 01005 ROOM=B2B_DOCK

FL6413
22-OHM-25%-1800MA-
0201
ROOM=B2B_DOCK

PP_HYDRA_ACC2 → PP_HYDRA_ACC2_CONN
C6413 220PF 5% 10V C0G-CERM 01005 ROOM=B2B_DOCK

FL6462
1500OHM-25%-200MA-0.7DCR
01005
ROOM=B2B_DOCK

LOWERMIC4_TO_CODEC_AIN4_N (OUT) → LOWERMIC4_TO_CODEC_AIN4_CONN_N
C6462 56PF 5% 25V NP0-C0G-CERM 01005 ROOM=B2B_DOCK

FL6464
1500OHM-25%-200MA-0.7DCR
01005
ROOM=B2B_DOCK

PP_CODEC_TO_LOWERMIC4_BIAS → PP_CODEC_TO_LOWERMIC4_BIAS_CONN
C6464 220PF 5% 10V C0G-CERM 01005 ROOM=B2B_DOCK

I2C1_AP_SCL (IN) → I2C1_AP_TO_MIC1_SCL_CONN (CKPLUS_WAIVE=I2C_PULLUP)
R6465 0.00 5% 1/32W MF 01005 ROOM=B2B_DOCK
C6465 56PF 5% 25V NP0-C0G-CERM 01005 ROOM=B2B_DOCK

I2C1_AP_SDA (BI) → I2C1_AP_BI_MIC1_SDA_CONN (CKPLUS_WAIVE=I2C_PULLUP)
R6466 0.00 5% 1/32W MF 01005 ROOM=B2B_DOCK
C6466 56PF 5% 25V NP0-C0G-CERM 01005 ROOM=B2B_DOCK

DOCK FLEX CONNECTOR

Rcpt: 516S00038 <-- This one on MLB
Plug: 516S00037

J6400
BM28P0.6-44DS-0.35V
F-ST-SM
ROOM=B2B_DOCK

Pin	Signal	Pin	Signal
45	SPKRAMP_BOT_TO_COIL_OUT_NEG	46	
1	SPKRAMP_BOT_TO_COIL_OUT_POS	2	
3	COIL_TO_SPKRAMP_BOT_VSENSE_POS_CONN	4	90_HYDRA_DP1_CONN_P
5	COIL_TO_SPKRAMP_BOT_VSENSE_NEG_CONN	6	90_HYDRA_DP1_CONN_N
7		8	
9	PP_CODEC_TO_LOWERMIC4_BIAS_CONN	10	90_HYDRA_DP2_CONN_N
11	LOWERMIC4_TO_CODEC_BIAS_FILT_RET	12	90_HYDRA_DP2_CONN_P
13	LOWERMIC4_TO_CODEC_AIN4_CONN_N	14	
15	LOWERMIC4_TO_CODEC_AIN4_CONN_P	16	PP_HYDRA_ACC1_CONN
17	PP1V8_IMU_COMPASS_DOCK_CONN	18	MIKEYBUS_REFERENCE
19	I2C1_AOP_BI_COMPASS_SDA_DOCK_CONN	20	HYDRA_CON_DETECT_CONN_L
21	I2C1_AOP_TO_COMPASS_SCL_DOCK_CONN	22	PP1V8_SAKONNET_CONN
23	COMPASS_TO_AOP_INT_DOCK_CONN	24	I2S_CODEC_ASP1_TO_AOP_AMPS_LRCLK_CONN
25		26	I2C0_AP_BI_SAKONNET_SDA_CONN
27	LOWERMIC1_TO_CODEC_AIN1_CONN_P	28	I2C0_AP_TO_SAKONNET_SCL_CONN
29	LOWERMIC1_TO_CODEC_AIN1_CONN_N	30	I2S_CODEC_ASP1_TO_AOP_AMPS_BCLK_CONN
31	LOWERMIC1_TO_CODEC_BIAS_FILT_RET	32	I2S_AOP_AMPS_TO_CODEC_ASP1_DOUT_CONN
33	PP_CODEC_TO_LOWERMIC1_BIAS_CONN	34	
35	I2C1_AP_BI_MIC1_SDA_CONN	36	PP_HYDRA_ACC2_CONN
37	I2C1_AP_TO_MIC1_SCL_CONN	38	
39		40	ARC1_TO_SOLENOID1_OUT_NEG
41	SOLENOID1_TO_ARC1_VSENSE_NEG	42	
43	SOLENOID1_TO_ARC1_VSENSE_POS	44	ARC1_TO_SOLENOID1_OUT_POS
47	PP_VBUS1_E75	48	

C6490 0.1UF 10% 16V X5R 0201 ROOM=B2B_DOCK
C6491 0.1UF 10% 16V X5R 0201 ROOM=B2B_DOCK
C6492 0.1UF 10% 16V X5R 0201 ROOM=B2B_DOCK
C6493 220PF 5% 25V C0G 01005 ROOM=B2B_DOCK
C6494 220PF 5% 25V C0G 01005 ROOM=B2B_DOCK
C6495 0.1UF 10% 16V X5R 0201 ROOM=B2B_DOCK
C6496 0.1UF 10% 16V X5R 0201 ROOM=B2B_DOCK
C6497 0.1UF 10% 16V X5R 0201 ROOM=B2B_DOCK

SOUTH SPEAKER

FL6480
1500OHM-25%-200MA-0.7DCR
01005
ROOM=B2B_DOCK

COIL_TO_SPKRAMP_BOT_VSENSE_POS (OUT) → COIL_TO_SPKRAMP_BOT_VSENSE_POS_CONN
C6480 (NOSTUFF) 220PF 5% 10V C0G-CERM 01005 ROOM=B2B_DOCK

FL6482
1500OHM-25%-200MA-0.7DCR
01005
ROOM=B2B_DOCK

COIL_TO_SPKRAMP_BOT_VSENSE_NEG (OUT) → COIL_TO_SPKRAMP_BOT_VSENSE_NEG_CONN
C6482 (NOSTUFF) 220PF 5% 10V C0G-CERM 01005 ROOM=B2B_DOCK

SPKRAMP_BOT_TO_COIL_OUT_POS (IN)
C6484 820PF 10% 10V X5R 01005 ROOM=B2B_DOCK
C6483 220PF 5% 10V C0G-CERM 01005 ROOM=B2B_DOCK

SPKRAMP_BOT_TO_COIL_OUT_NEG (IN)
C6486 820PF 10% 10V X5R 01005 ROOM=B2B_DOCK
C6485 220PF 5% 10V C0G-CERM 01005 ROOM=B2B_DOCK

PAGE TITLE: I/O: B2B Dock

Apple Inc.

DRAWING NUMBER: 051-02221 SIZE: D
REVISION: 9.0.0
BRANCH: evt-1
PAGE: 64 OF 80
SHEET: 49 OF 51

NOTICE OF PROPRIETARY PROPERTY:
THE INFORMATION CONTAINED HEREIN IS THE PROPRIETARY PROPERTY OF APPLE INC.
THE POSESSOR AGREES TO THE FOLLOWING:
I TO MAINTAIN THIS DOCUMENT IN CONFIDENCE
II NOT TO REPRODUCE OR COPY IT
III NOT TO REVEAL OR PUBLISH IT IN WHOLE OR PART
IV ALL RIGHTS RESERVED

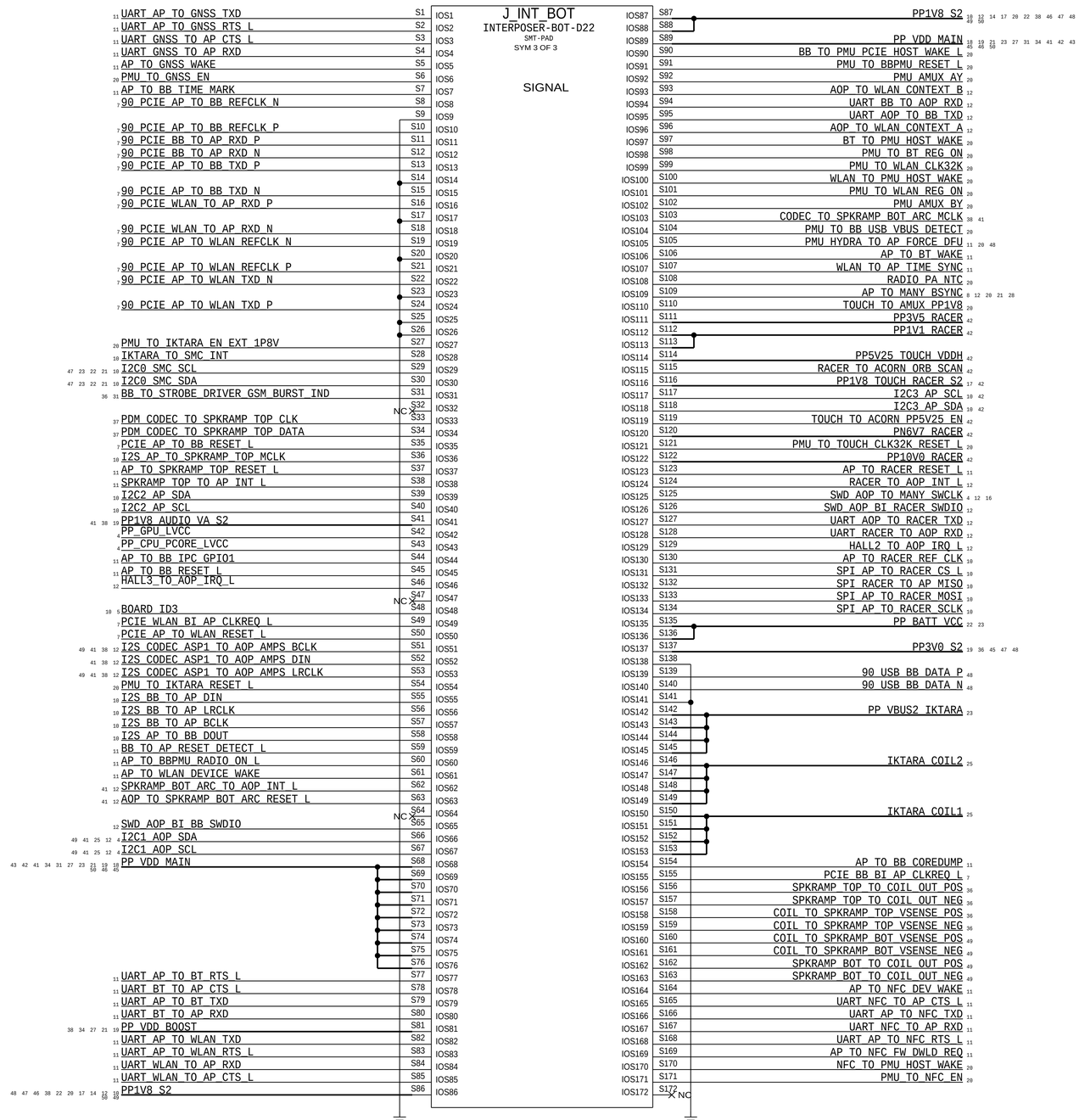

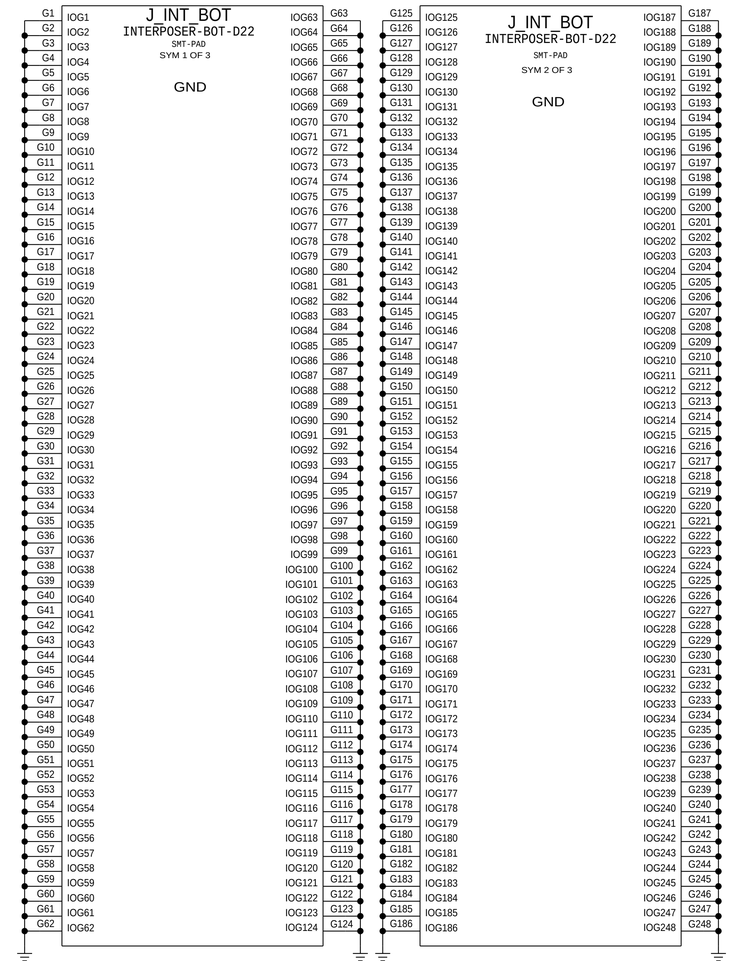

PAGE TITLE

I/O: Interposer (Bottom)

Apple Inc.

DRAWING NUMBER 051-02221 SIZE D

REVISION 9.0.0

BRANCH evt-1

PAGE 65 OF 80

SHEET 50 OF 51

NOTICE OF PROPRIETARY PROPERTY:

THE INFORMATION CONTAINED HEREIN IS THE PROPRIETARY PROPERTY OF APPLE INC.
THE POSESSOR AGREES TO THE FOLLOWING:

I TO MAINTAIN THIS DOCUMENT IN CONFIDENCE

II NOT TO REPRODUCE OR COPY IT

III NOT TO REVEAL OR PUBLISH IT IN WHOLE OR PART

IV ALL RIGHTS RESERVED

Radios on MLB Bottom

SYNC_DATE=06/04/2015

PAGE TITLE
RADIOS

Apple Inc.

DRAWING NUMBER 051-02221
SIZE D
REVISION 9.0.0
BRANCH evt-1
PAGE 80 OF 80
SHEET 51 OF 51

NOTICE OF PROPRIETARY PROPERTY:
THE INFORMATION CONTAINED HEREIN IS THE PROPRIETARY PROPERTY OF APPLE INC.
THE POSESSOR AGREES TO THE FOLLOWING:
I TO MAINTAIN THIS DOCUMENT IN CONFIDENCE
II NOT TO REPRODUCE OR COPY IT
III NOT TO REVEAL OR PUBLISH IT IN WHOLE OR PART
IV ALL RIGHTS RESERVED

1. ALL RESISTANCE VALUES ARE IN OHMS, 0.1 WATT +/- 5%.
2. ALL CAPACITANCE VALUES ARE IN MICROFARADS.
3. ALL CRYSTALS & OSCILLATOR VALUES ARE IN HERTZ.

REV	ECN	DESCRIPTION OF REVISION	CK APPD / DATE
7	0008448938	ENGINEERING RELEASED	2017-04-11

X893 MLB Bottom: EVT

LAST_MODIFICATION=Tue Apr 11 16:10:11 2017

PAGE	CSA	CONTENTS	SYNC	DATE
1	1	TABLE OF CONTENTS		07/29/2016
2	2	SYSTEM:BOM Tables		03/08/2017
3	4	SYSTEM: Mechanical Components		12/01/2016
4	6	BOOTSTRAPPING		11/03/2016
5	7	SYSTEM: Testpoints (Bottom)	test_mlb	01/17/2017
6	34	SYSTEM POWER: Iktara	mlb_bot	04/04/2017
7	49	AUDIO: Speaker Amp Bottom	mlb_bot	04/04/2017
8	50	AUDIO: Speaker Amp Top	mlb_bot	04/04/2017
9	55	HALL EFFECT	mlb_bot	04/04/2017
10	58	CG: B2B Luna & Touch	mlb_bot	04/04/2017
11	66	I/O: Interposer (Top)	mlb_bot	04/04/2017
12	80	RADIOS		07/29/2016
13	1	RADIO_MLB		
14	2	BASEBAND		
15	3	BASEBAND MEMORY/DEBUG		
16	4	BASEBAND POWER		
17	5	BASEBAND PMIC		
18	6	TRANSCEIVERS		
19	7	ET MODULATOR		
20	8	TDD TRANSMIT		
21	9	FDD TRANSMIT		
22	10	PRIMARY RECEIVE		
23	11	LOWER ANTENNA & COUPLERS		
24	12	DIVERSITY RECEIVE ASM'S		
25	13	DIVERSITY RECEIVE LNA'S		
26	14	UPPER ANTENNA FEEDS		
27	15	GNSS		
28	16	TEST POINTS & SIM		
29	17	RF CONNECTORS AND MC		
30	1	SymbolPorts		
31	4	Guinness	WIFI	01/30/2014
32	5	WiFiANTFeeds		
33	1	page1		
34	75	NFC		

PAGE	CSA	CONTENTS	SYNC	DATE

Sub Designs

SOURCE PROJECT	SUB-DESIGN NAME	VERSION	HARD/SOFT	SYNC_DATE/TIME
D221	RADIO_MLB	0.115.0	S	2017_04_05_18:48:43
D22	NFC_MLB	0.22.0	S	2017_03_22_22:11:23
D22	WIFI_MLB	0.20.0	S	2017_04_04_09:54:33

BOM:639-03229
MCO:056-04080

PART#	QTY	DESCRIPTION	REFERENCE DESIGNATOR(S)	CRITICAL	BOM OPTION
051-02247	1	SCH,MLB_BOT,X893	SCH	NO	COMMON
820-00869	1	PCB,MLB_BOT,X893	PCB	NO	COMMON

TABLE OF CONTENTS
SYNC_DATE=07/29/2016

DRAWING TITLE: SCH,MLB,BOT,X893

Apple Inc.

DRAWING NUMBER: 051-02247
SIZE: D
REVISION: 7.0.0
BRANCH: evt-1
PAGE: 1 OF 80
SHEET: 1 OF 34

NOTICE OF PROPRIETARY PROPERTY:
THE INFORMATION CONTAINED HEREIN IS THE PROPRIETARY PROPERTY OF APPLE INC.
THE POSESSOR AGREES TO THE FOLLOWING:
I TO MAINTAIN THIS DOCUMENT IN CONFIDENCE
II NOT TO REPRODUCE OR COPY IT
III NOT TO REVEAL OR PUBLISH IT IN WHOLE OR PART
IV ALL RIGHTS RESERVED

EEEE Codes

PART#	QTY	DESCRIPTION	REFERENCE DESIGNATOR(S)	CRITICAL	BOM OPTION
825-7691	1	EEEE FOR (MLB_BOT, 639-03229)	EEEE_HM07	NO	COMMON

Global Capacitors

PART NUMBER	ALTERNATE FOR PART NUMBER	BOM OPTION	REF DES	COMMENTS:
138S00148	138S00149	BOM_TABLE_ALTS	ALL	0402-3T,10.5uF@1V, Kyocera
138S00150	138S00149	BOM_TABLE_ALTS	ALL	0402-3T,10.5uF@1V, SEMCO
138S00151	138S00149	BOM_TABLE_ALTS	ALL	0402-3T,10.5uF@1V, TY

CRITICAL PART#	COMMENT
138S00149	0402-3T,10.5uF@1V

PART NUMBER	ALTERNATE FOR PART NUMBER	BOM OPTION	REF DES	COMMENTS:
138S00143	138S00144	BOM_TABLE_ALTS	ALL	0402,16uF@1V, Kyocera
138S00163	138S00144	BOM_TABLE_ALTS	ALL	0402,16uF@1V, Taiyo

CRITICAL PART#	COMMENT
138S00144	0402,16uF@1V

PART NUMBER	ALTERNATE FOR PART NUMBER	BOM OPTION	REF DES	COMMENTS:
138S00138	138S00139	BOM_TABLE_ALTS	ALL	0201,3uF@1V, Kyocera
138S00164	138S00139	BOM_TABLE_ALTS	ALL	0201,3uF@1V, Taiyo

CRITICAL PART#	COMMENT
138S00139	0201,3uF@1V

PART NUMBER	ALTERNATE FOR PART NUMBER	BOM OPTION	REF DES	COMMENTS:
138S00145	138S00146	BOM_TABLE_ALTS	ALL	0402,5.1uF@3V, Kyocera
138S00165	138S00146	BOM_TABLE_ALTS	ALL	0402,5.1uF@3V, Taiyo

CRITICAL PART#	COMMENT
138S00146	0402,5.1uF@3V

PART NUMBER	ALTERNATE FOR PART NUMBER	BOM OPTION	REF DES	COMMENTS:
138S00140	138S00141	BOM_TABLE_ALTS	ALL	0201,1.1uF@3V, Kyocera
138S00142	138S00141	BOM_TABLE_ALTS	ALL	0201,1.1uF@3V, SEMCO
138S00166	138S00141	BOM_TABLE_ALTS	ALL	0201,1.1uF@3V, Taiyo

CRITICAL PART#	COMMENT
138S00141	0201,1.1uF@3V

Global Ferrites

PART NUMBER	ALTERNATE FOR PART NUMBER	BOM OPTION	REF DES	COMMENTS:
152S00558	152S00557	BOM_TABLE_ALTS	ALL	IND,MLD,0.47UH,20%,2.5A,80MΩ,1608
155S00194	155S0610	BOM_TABLE_ALTS	ALL	FERR BD,150 OHM,25%,200MA,0.7 DCR,01005
155S00200	155S0610	BOM_TABLE_ALTS	ALL	FERR BD,150 OHM,25%,200MA,0.7 DCR,01005

CRITICAL PART#	COMMENT
152S00557	IND,MLD,0.47UH,20%,2.5A,80MΩ,1608
155S0610	FERR BD,150 OHM,25%,200MA,0.7 DCR,01005

Global R/C Alternates

PART NUMBER	ALTERNATE FOR PART NUMBER	BOM OPTION	REF DES	COMMENTS:
138S0648	138S0652	BOM_TABLE_ALTS	ALL	CAP,X5R,4.7UF,6.3V,0.65MM,0402,TAIYO
138S00024	138S0986	BOM_TABLE_ALTS	ALL	CAP,CER,3-TERM,7.5UF,20%,4V,0402,TAIYO/TDK
138S0706	138S0739	BOM_TABLE_ALTS	ALL	CAP,CER,1UF,20%,10V,X5R,0201,MURATA
138S0945	138S0739	BOM_TABLE_ALTS	ALL	CAP,CER,1UF,20%,10V,X5R,0201,KYOCERA
138S0739	138S0706	BOM_TABLE_ALTS	ALL	CAP,CER,X5R,0.22UF,20%,6.3V,20%
132S0436	132S0400	BOM_TABLE_ALTS	ALL	CAP,CER,X5R,0.22UF,20%,6.3V,01005
138S00049	138S0831	BOM_TABLE_ALTS	ALL	CAP,CER,X5R,2.2UF,20%,6.3V,0201

CRITICAL PART#	COMMENT
138S0652	CAP,X5R,4.7UF,6.3V,0.65MM,0402,TAIYO
138S0986	CAP,CER,3-TERM,7.5UF,20%,4V,0402,TAIYO/TDK
138S0739	CAP,CER,1UF,20%,10V,X5R,0201,MURATA
138S0706	CAP,CER,X5R,0.22UF,20%,6.3V,20%
132S0400	CAP,CER,X5R,0.22UF,20%,6.3V,01005
138S0831	CAP,CER,X5R,2.2UF,20%,6.3V,0201

Global Inductors

PART NUMBER	ALTERNATE FOR PART NUMBER	BOM OPTION	REF DES	COMMENTS:
152S00653	152S00651	BOM_TABLE_ALTS	ALL	IND,1.2UH,3A,2016,0.65Ω
152S00654	152S00652	BOM_TABLE_ALTS	ALL	IND,1.2UH,3A,2016,0.8Ω

CRITICAL PART#	COMMENT
152S00651	IND,1.2UH,3A,2016,0.65Ω
152S00652	IND,1.2UH,3A,2016,0.8Ω

Multi-Vendor Criticals

CRITICAL PART#	COMMENT
138S0979	CAP,CER,X5R,10UF,20%,10V,0402,H=0.65MM
138S0683	CAP,CER,X5R,1UF,10%,25V,0402
132S0663	CAP,CER,X5R,1UF,10%,25V,0402
132S0288	CAP,CER,X5R,0.1UF,10%,16V,0201
132S0275	CAP,CER,X5R,470PF,10%,10V,01005
132S0245	CAP,CER,X5R,0.01UF,10%,6.3V,01005

CRITICAL PART#	COMMENT
132S00008	CAP,CER,0.1UF,10%,50V,X7R,0402
131S0804	CAP,CER,27PF,5%,C0G,25V,0201
131S0307	CAP,CER,NPO/C0G,100PF,5%,16V,01005
131S00053	CAP,CER,C0G,220PF,5%,10V,01005
117S0055	RES,MF,1/20W,2M OHM,5,0201,SMD
107S0257	THERMISTOR,NTC,10K OHM,1%,B=3435,01005

Iktara

PART#	QTY	DESCRIPTION	REFERENCE DESIGNATOR(S)	CRITICAL	BOM OPTION
132S00021	8	CAP,CER,0.082UF,10%,50V,X7R,0402	C3452,C3453,C3454,C3455,C3461,C3462,C3463,C3464	NO	COMMON
132S0423	2	CAP,CER,0.022UF,50V,X7R,10%,0402	C3451,C3465	CRITICAL	COMMON
132S0423	2	CAP,CER,0.022UF,50V,X7R,10%,0402	C3455,C3466	CRITICAL	NOSTUFF

PART NUMBER	ALTERNATE FOR PART NUMBER	BOM OPTION	REF DES	COMMENTS:
685-00185	685-00184	BOM_TABLE_ALTS	SUBBOM_DS	SUBBOM,MLB,BOT,DIODES,ONSEMI,X893

PART#	QTY	DESCRIPTION	REFERENCE DESIGNATOR(S)	CRITICAL	BOM OPTION
685-00184	1	SUBBOM,MLB,BOT,DIODES,DIODES,X893	SUBBOM_DS	CRITICAL	COMMON
371S00133	4	DIODES,SHOTTKY DIODE,30V,2A,0603	D3400,D3401,D3402,D3403	CRITICAL	DIODES_DS
371S00132	4	ONSEMI,SHOTTKY DIODE,30V,2A,0603	D3400,D3401,D3402,D3403	CRITICAL	ONSEMI_DS

Soft-Term Cap Sub BOMs

PART#	QTY	DESCRIPTION	REFERENCE DESIGNATOR(S)	CRITICAL	BOM OPTION
685-00159	1	SUBBOM,MLB,BOT,CAP,TYPICAL,X893	SUBBOM_CAP	CRITICAL	COMMON

Touch/Luna B2B

PART#	QTY	DESCRIPTION	REFERENCE DESIGNATOR(S)	CRITICAL	BOM OPTION
138S00159	1	CAP,SOFT-TERM,2.2UF,6.3V,0201,KYOCERA	C5890	CRITICAL	SOFT_CAP
138S0831	1	CAP,TYPICAL,2.2UF,6.3V,0201,MURATA	C5890	CRITICAL	TYPICAL_CAP

PART NUMBER	ALTERNATE FOR PART NUMBER	BOM OPTION	REF DES	COMMENTS:
685-00160	685-00159	BOM_TABLE_ALTS	SUBBOM_CAP	SUBBOM,MLB,BOT,CAP,SOFT,X893

SYNC_MASTER= SYNC_DATE=03/08/2017

PAGE TITLE

SYSTEM:BOM Tables

Apple Inc.

DRAWING NUMBER 051-02247 SIZE D

REVISION 7.0.0

BRANCH evt-1

PAGE 2 OF 80

SHEET 2 OF 34

NOTICE OF PROPRIETARY PROPERTY:

THE INFORMATION CONTAINED HEREIN IS THE PROPRIETARY PROPERTY OF APPLE INC.
THE POSESSOR AGREES TO THE FOLLOWING:

I TO MAINTAIN THIS DOCUMENT IN CONFIDENCE

II NOT TO REPRODUCE OR COPY IT

III NOT TO REVEAL OR PUBLISH IT IN WHOLE OR PART

IV ALL RIGHTS RESERVED

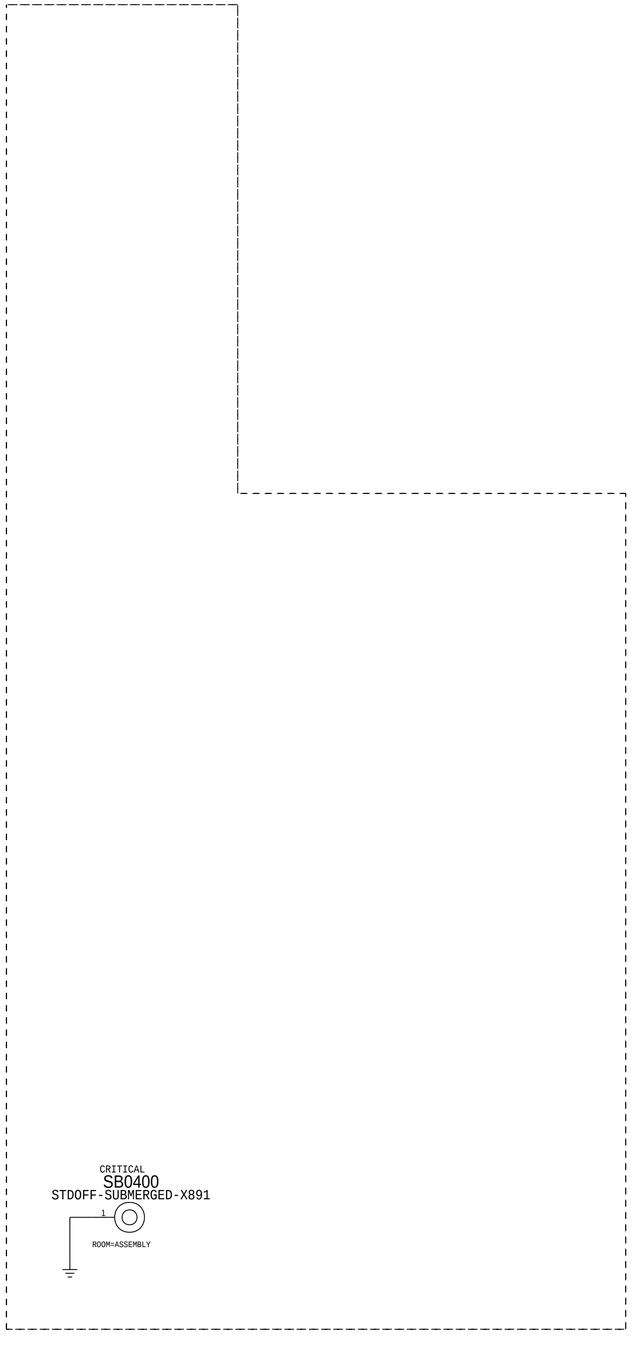

FIDUCIALS

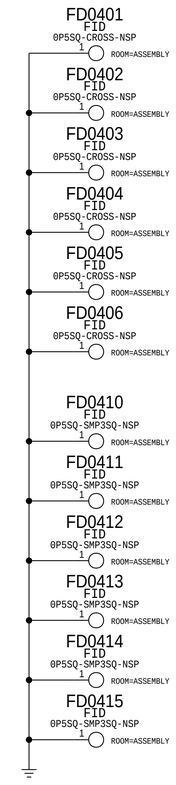

SYNC_DATE=12/01/2016

PAGE TITLE

SYSTEM: Mechanical Components

Apple Inc.

DRAWING NUMBER	051-02247
SIZE	D
REVISION	7.0.0
BRANCH	evt-1
PAGE	4 OF 80
SHEET	3 OF 34

NOTICE OF PROPRIETARY PROPERTY:

THE INFORMATION CONTAINED HEREIN IS THE PROPRIETARY PROPERTY OF APPLE INC.
THE POSESSOR AGREES TO THE FOLLOWING:
I TO MAINTAIN THIS DOCUMENT IN CONFIDENCE
II NOT TO REPRODUCE OR COPY IT
III NOT TO REVEAL OR PUBLISH IT IN WHOLE OR PART
IV ALL RIGHTS RESERVED

BOOTSTRAPPING:BOARD ID[3]

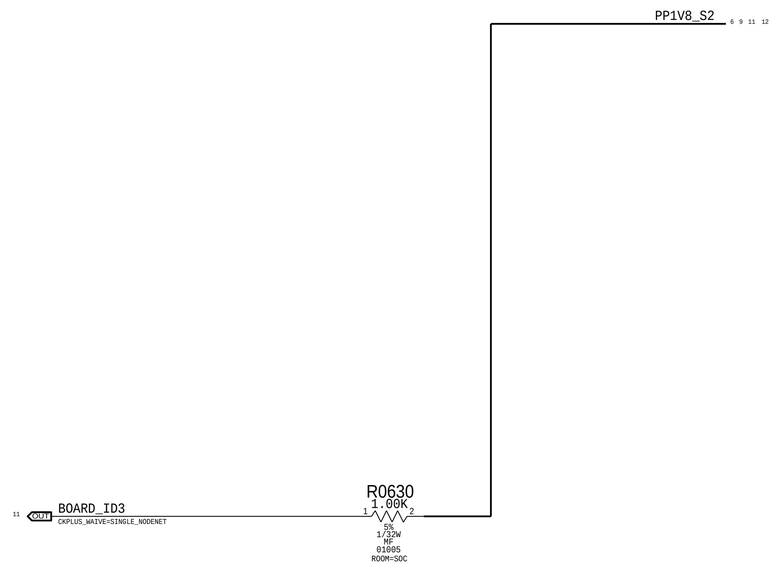

D221 Selected (BOARD_ID3) ->

Board Rev[3:0]				
Float=Low I PU=High				
	3	2	1	0
	Build Major		Build Minor	
Proto 1	1	1	1	1
Proto 2	1	1	1	0
Proto 3	1	1	0	1
(Spare)	1	1	0	0
EVT	1	0	1	1
(Spare)	1	0	1	0
Carrier	0	1	1	1
(Spare)	0	1	1	0
DVT	0	0	1	1
(Spare)	0	0	1	0
(Spare)	0	0	0	1
PVT	0	0	0	0

Board ID[4:0]					
Float=Low I PU=High					
	4	3	2	1	0
	X	Baseband	Form Factor		MLB/Dev
D20 MLB	0	0	0	1	0
D20 Dev	0	0	0	1	1
D21 MLB	0	0	1	0	0
D21 Dev	0	0	1	0	1
D22 MLB	0	0	1	1	0
D22 Dev	0	0	1	1	1
D201 MLB	0	1	0	1	0
D201 Dev	0	1	0	1	1
D211 MLB	0	1	1	0	0
D211 Dev	0	1	1	0	1
D221 MLB	0	1	1	1	0
D221 Dev	0	1	1	1	1

Boot Config[2:0]			
Float=Low I PU=High			
	2	1	0
SPI0	0	0	0
SPI0 Test Mode	0	0	1
SPI0 NAND	0	1	0
SPI0 NAND Test	0	1	1
Slow SPI0 Test	1	1	0

SYNC_MASTER
SYNC_DATE=11/03/2016

PAGE TITLE
BOOTSTRAPPING

Apple Inc.

DRAWING NUMBER 051-02247
SIZE D
REVISION 7.0.0
BRANCH evt-1
PAGE 6 OF 80
SHEET 4 OF 34

NOTICE OF PROPRIETARY PROPERTY:
THE INFORMATION CONTAINED HEREIN IS THE PROPRIETARY PROPERTY OF APPLE INC.
THE POSESSOR AGREES TO THE FOLLOWING:
I TO MAINTAIN THIS DOCUMENT IN CONFIDENCE
II NOT TO REPRODUCE OR COPY IT
III NOT TO REVEAL OR PUBLISH IT IN WHOLE OR PART
IV ALL RIGHTS RESERVED

Test Points

Net	Point	Note
PP_VDD_MAIN	TP0700	VDD_MAIN
	TP0701	
	TP0702	
	TP0703	
PP_BATT_VCC	TP0515	VBATT
	TP0522	
	TP0705	
	TP0706	
	TP0707	
	TP0708	
	TP0709	
	TP0710	

AMUX

Net	Point	Note
PMU_AMUX_AY	TP0713	ANALOG MUX A OUTPUT
PMU_AMUX_BY	TP0715	ANALOG MUX B OUTPUT

DFU

Net	Point	Note
PMU_HYDRA_TO_AP_FORCE_DFU	TP0714	FORCE DFU

LVCC

Net	Point
PP_GPU_LVCC	TP0720
PP_CPU_PCORE_LVCC	TP0721

COIL

Net	Point
IKTARA_COIL1	TP0730
IKTARA_COIL2	TP0731

Net	Point
GND	TP0750
PP5V25_TOUCH_VDDH	TP0751
PP3V5_RACER	TP0752
PN6V7_RACER	TP0753
PP10V0_RACER	TP0754
PP1V1_RACER	TP0755
TOUCH_TO_ACORN_PP5V25_EN	TP0756
TOUCH_TO_AMUX_PP1V8	TP0757
PMU_TO_TOUCH_CLK32K_RESET_L	TP0758
AP_TO_MANY_BSYNC	TP0759
HALL2_TO_AOP_IRQ_L	TP0760
AP_TO_RACER_RESET_L	TP0761
UART_RACER_TO_AOP_RXD	TP0762
RACER_TO_AOP_INT_L	TP0763
UART_AOP_TO_RACER_TXD	TP0764
RACER_TO_ACORN_ORB_SCAN	TP0766
SPI_AP_TO_RACER_CS_L	TP0767
SPI_AP_TO_RACER_MOSI	TP0768
I2C3_AP_SDA	TP0771
I2C3_AP_SCL	TP0772

Probe Points

Net	Point	Note
PP1V8_TOUCH_RACER_S2	TP0780	
GND	TP0790	Stockholm GND TP

Iktara Debug

Net	Point
PMU_TO_IKTARA_EN_EXT_1P8V	PP0700
IKTARA_ANA1	PP0701
IKTARA_GPIO3	PP0702
IKTARA_GPIO4	PP0703
IKTARA_TO_SMC_INT	PP0704

SYNC_MASTER=test_mlb SYNC_DATE=01/17/2017

PAGE TITLE
SYSTEM: Testpoints (Bottom)

Apple Inc.

DRAWING NUMBER 051-02247
SIZE D
REVISION 7.0.0
BRANCH evt-1
PAGE 7 OF 80
SHEET 5 OF 34

NOTICE OF PROPRIETARY PROPERTY:
THE INFORMATION CONTAINED HEREIN IS THE PROPRIETARY PROPERTY OF APPLE INC.
THE POSESSOR AGREES TO THE FOLLOWING:
I TO MAINTAIN THIS DOCUMENT IN CONFIDENCE
II NOT TO REPRODUCE OR COPY IT
III NOT TO REVEAL OR PUBLISH IT IN WHOLE OR PART
IV ALL RIGHTS RESERVED

Iktara

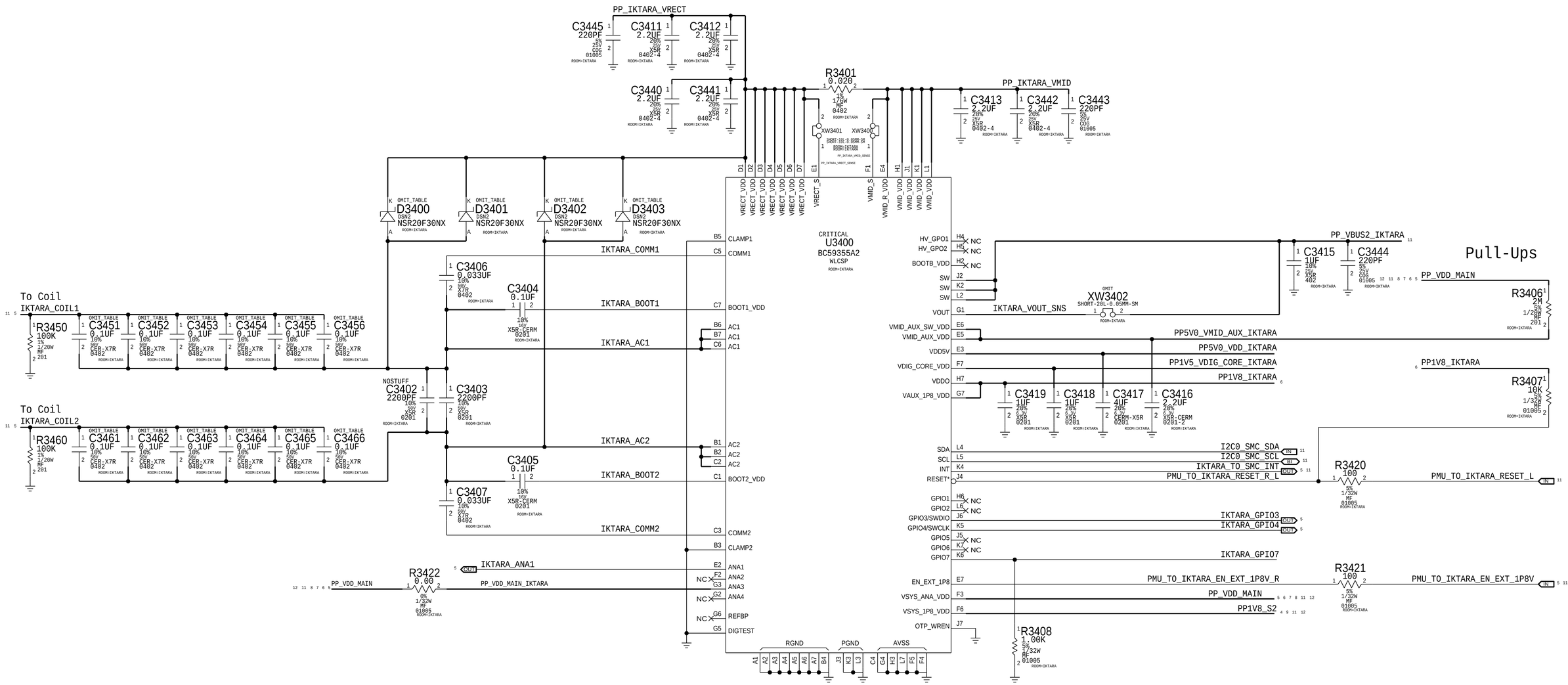

PAGE TITLE

SYSTEM POWER: Iktara

Apple Inc.

DRAWING NUMBER 051-02247

SIZE D

REVISION 7.0.0

BRANCH evt-1

PAGE 34 OF 80

SHEET 6 OF 34

NOTICE OF PROPRIETARY PROPERTY:

THE INFORMATION CONTAINED HEREIN IS THE PROPRIETARY PROPERTY OF APPLE INC.
THE POSESSOR AGREES TO THE FOLLOWING:
I TO MAINTAIN THIS DOCUMENT IN CONFIDENCE
II NOT TO REPRODUCE OR COPY IT
III NOT TO REVEAL OR PUBLISH IT IN WHOLE OR PART
IV ALL RIGHTS RESERVED

South Speaker Amplifier

APN: 338S00295

I2C ADDRESS: 1000 000x
0x80

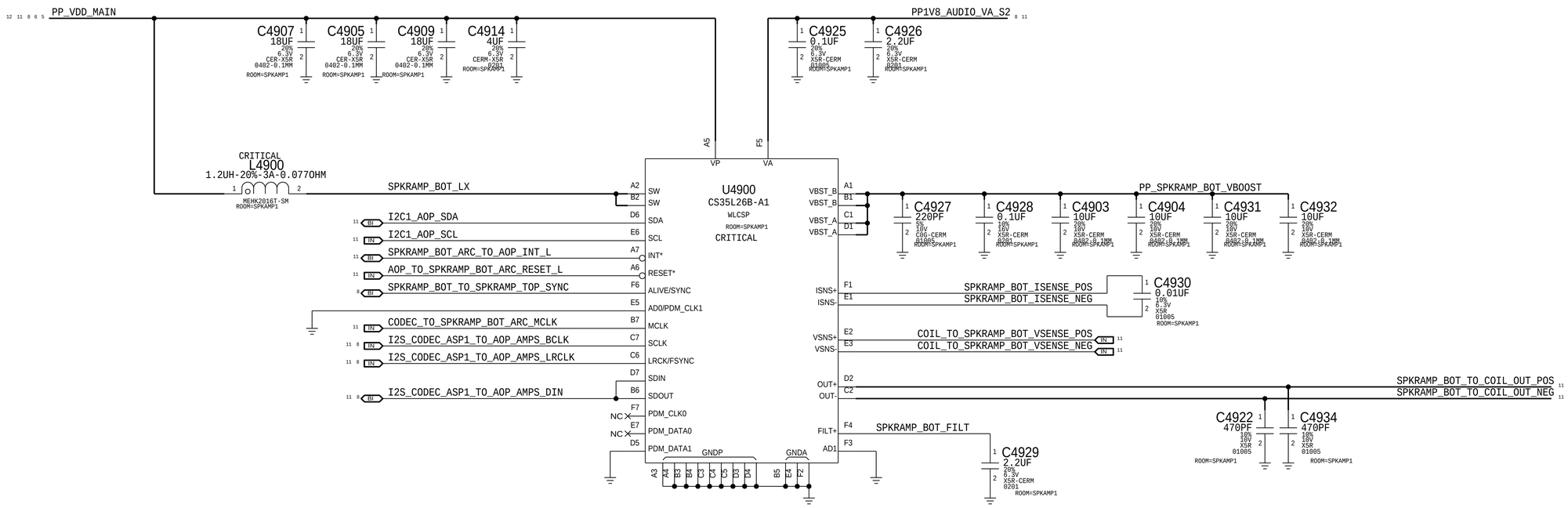

PAGE TITLE	AUDIO: Speaker Amp Bottom
Apple Inc.	DRAWING NUMBER 051-02247 SIZE D
	REVISION 7.0.0
	BRANCH evt-1
	PAGE 49 OF 80
	SHEET 7 OF 34

NOTICE OF PROPRIETARY PROPERTY:
THE INFORMATION CONTAINED HEREIN IS THE PROPRIETARY PROPERTY OF APPLE INC.
THE POSESSOR AGREES TO THE FOLLOWING:
I TO MAINTAIN THIS DOCUMENT IN CONFIDENCE
II NOT TO REPRODUCE OR COPY IT
III NOT TO REVEAL OR PUBLISH IT IN WHOLE OR PART
IV ALL RIGHTS RESERVED

Pull Downs

AP_TO_SPKRAMP_TOP_RESET_L

R5001 100K 5% 1/32W MF 01005 ROOM=SPKAMP2

North Speaker Amplifier

APN: 338S00295

I2C ADDRESS: 1000 000x

0x80

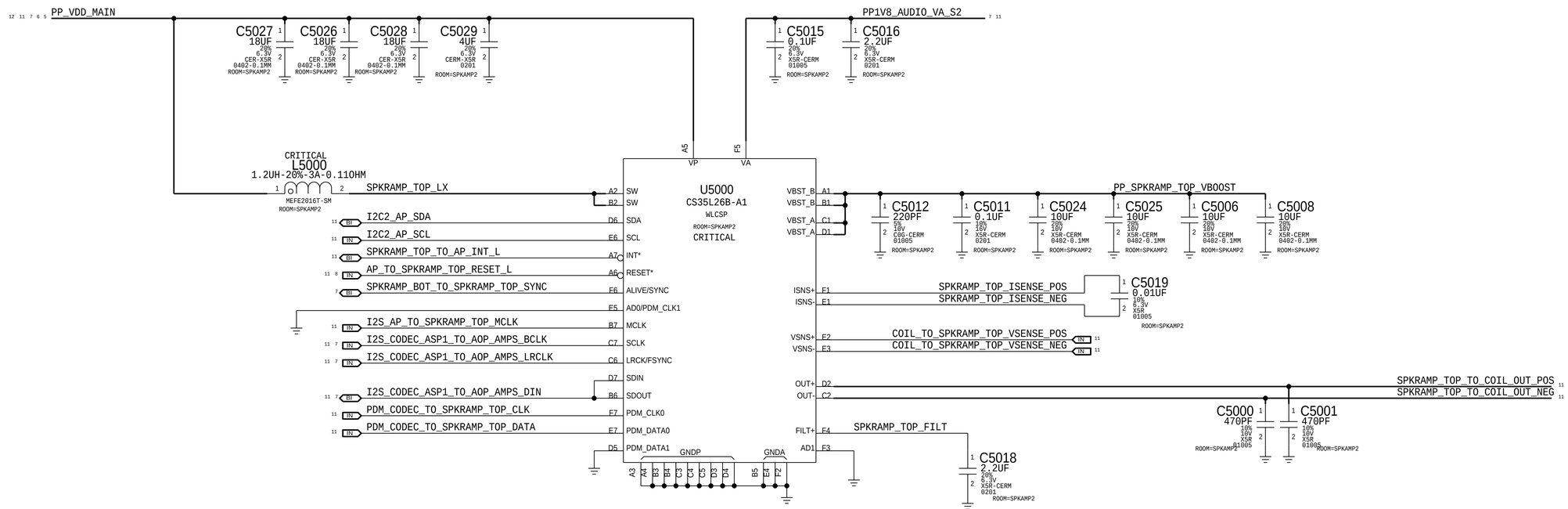

PAGE TITLE	AUDIO: Speaker Amp Top
Apple Inc.	DRAWING NUMBER 051-02247 SIZE D
	REVISION 7.0.0
	BRANCH evt-1
	PAGE 50 OF 80
	SHEET 8 OF 34

NOTICE OF PROPRIETARY PROPERTY:
THE INFORMATION CONTAINED HEREIN IS THE PROPRIETARY PROPERTY OF APPLE INC.
THE POSESSOR AGREES TO THE FOLLOWING:
I TO MAINTAIN THIS DOCUMENT IN CONFIDENCE
II NOT TO REPRODUCE OR COPY IT
III NOT TO REVEAL OR PUBLISH IT IN WHOLE OR PART
IV ALL RIGHTS RESERVED

Hall Effect

APN:353S3697

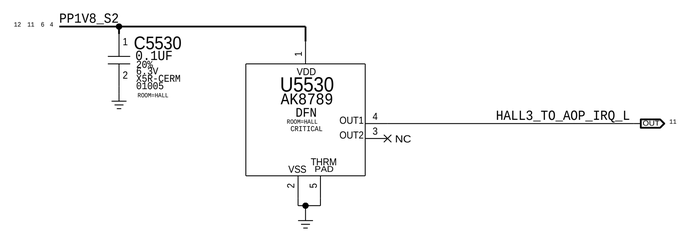

PAGE TITLE

HALL EFFECT

Apple Inc.

DRAWING NUMBER 051-02247

SIZE D

REVISION 7.0.0

BRANCH evt-1

PAGE 55 OF 80

SHEET 9 OF 34

NOTICE OF PROPRIETARY PROPERTY:

THE INFORMATION CONTAINED HEREIN IS THE PROPRIETARY PROPERTY OF APPLE INC.
THE POSESSOR AGREES TO THE FOLLOWING:

I TO MAINTAIN THIS DOCUMENT IN CONFIDENCE

II NOT TO REPRODUCE OR COPY IT

III NOT TO REVEAL OR PUBLISH IT IN WHOLE OR PART

IV ALL RIGHTS RESERVED

Racer I/O

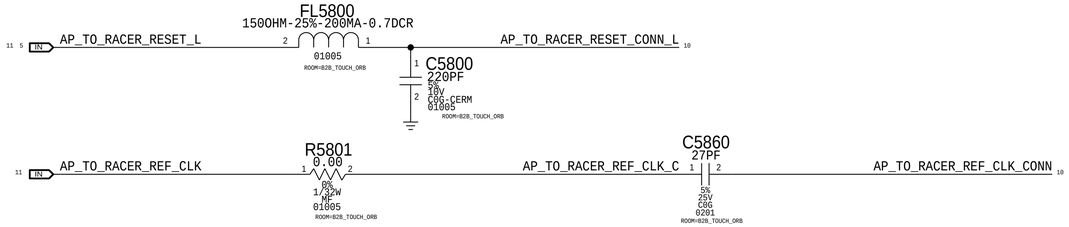

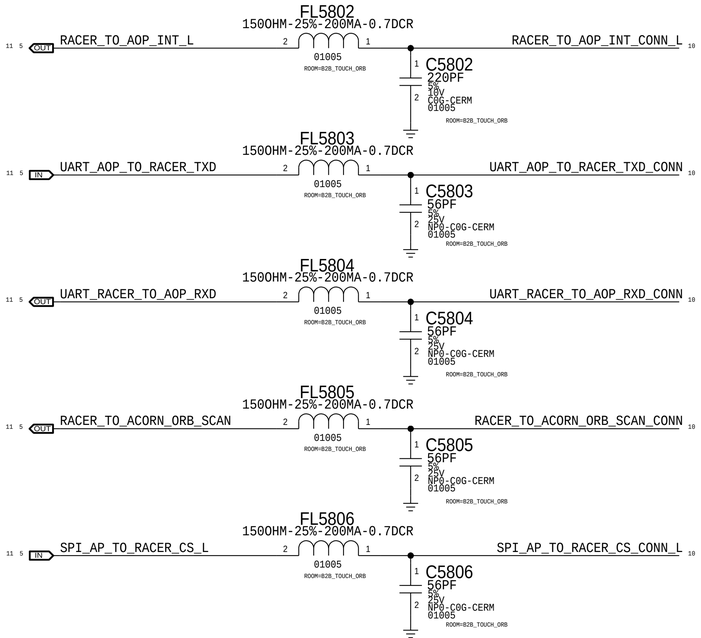

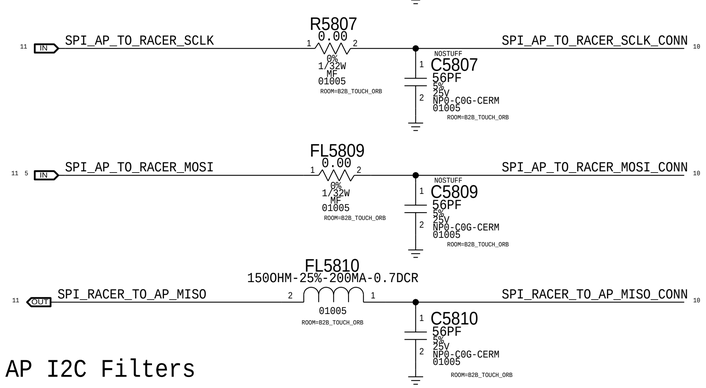

AP I2C Filters

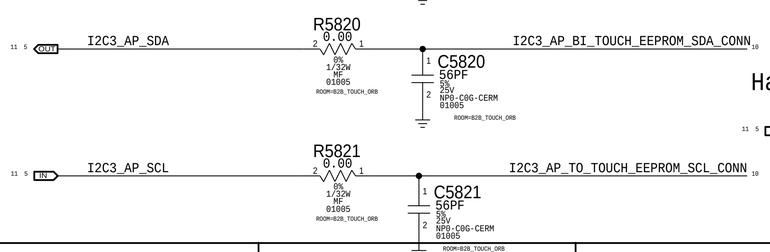

Touch and Misc I/O

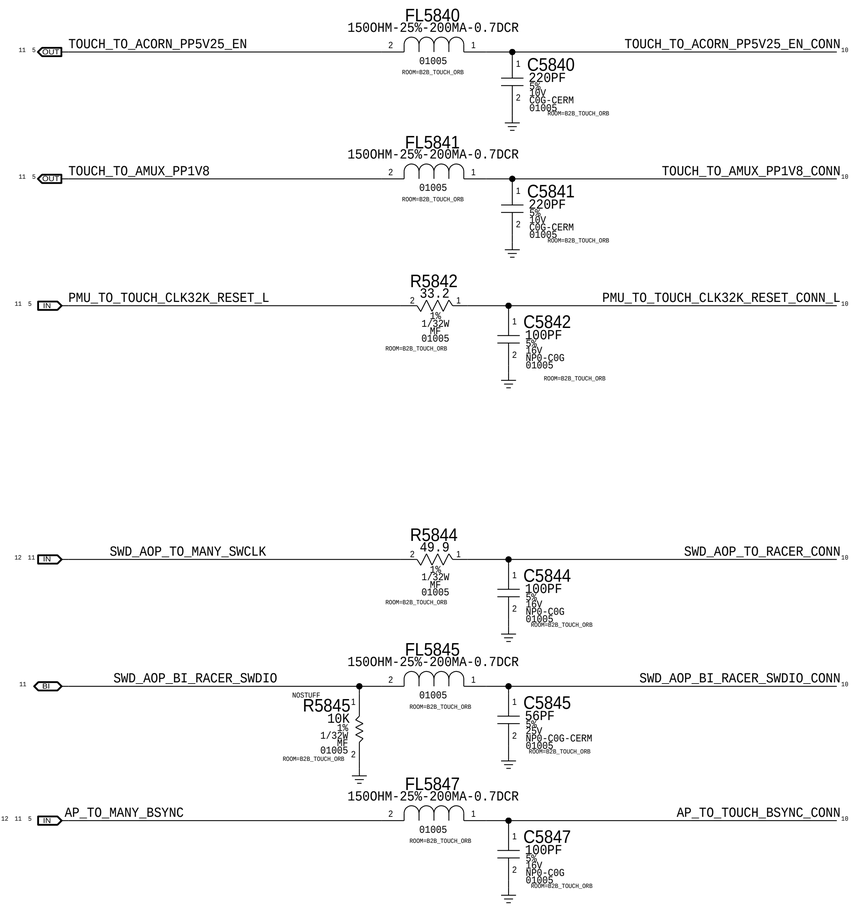

Hall Effect

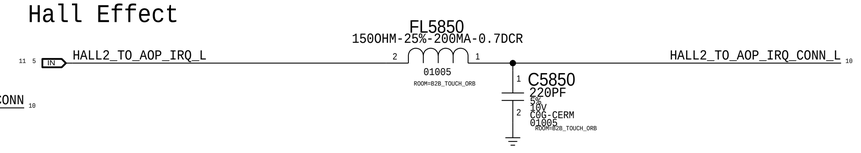

Luna + Touch Connector

Rcpt: 516S00325 <-- This one on MLB
Plug: 516S00326

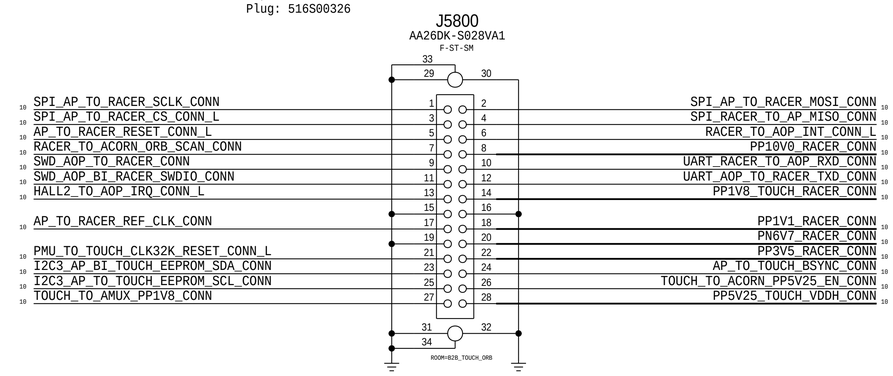

Touch And Racer Power

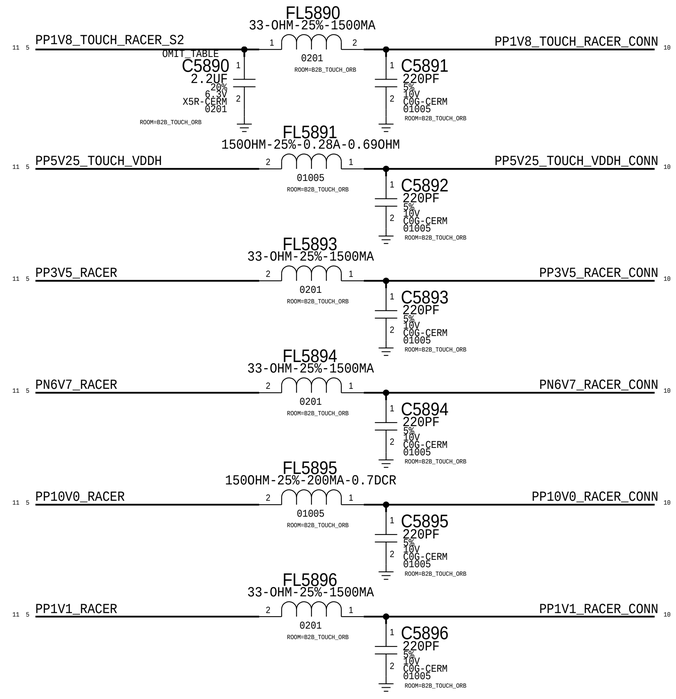

PAGE TITLE
CG: B2B Luna & Touch

Apple Inc.

DRAWING NUMBER 051-02247
SIZE D
REVISION 7.0.0
BRANCH evt-1
PAGE 58 OF 80
SHEET 10 OF 34

NOTICE OF PROPRIETARY PROPERTY:
THE INFORMATION CONTAINED HEREIN IS THE PROPRIETARY PROPERTY OF APPLE INC.
THE POSESSOR AGREES TO THE FOLLOWING:
I TO MAINTAIN THIS DOCUMENT IN CONFIDENCE
II NOT TO REPRODUCE OR COPY IT
III NOT TO REVEAL OR PUBLISH IT IN WHOLE OR PART
IV ALL RIGHTS RESERVED

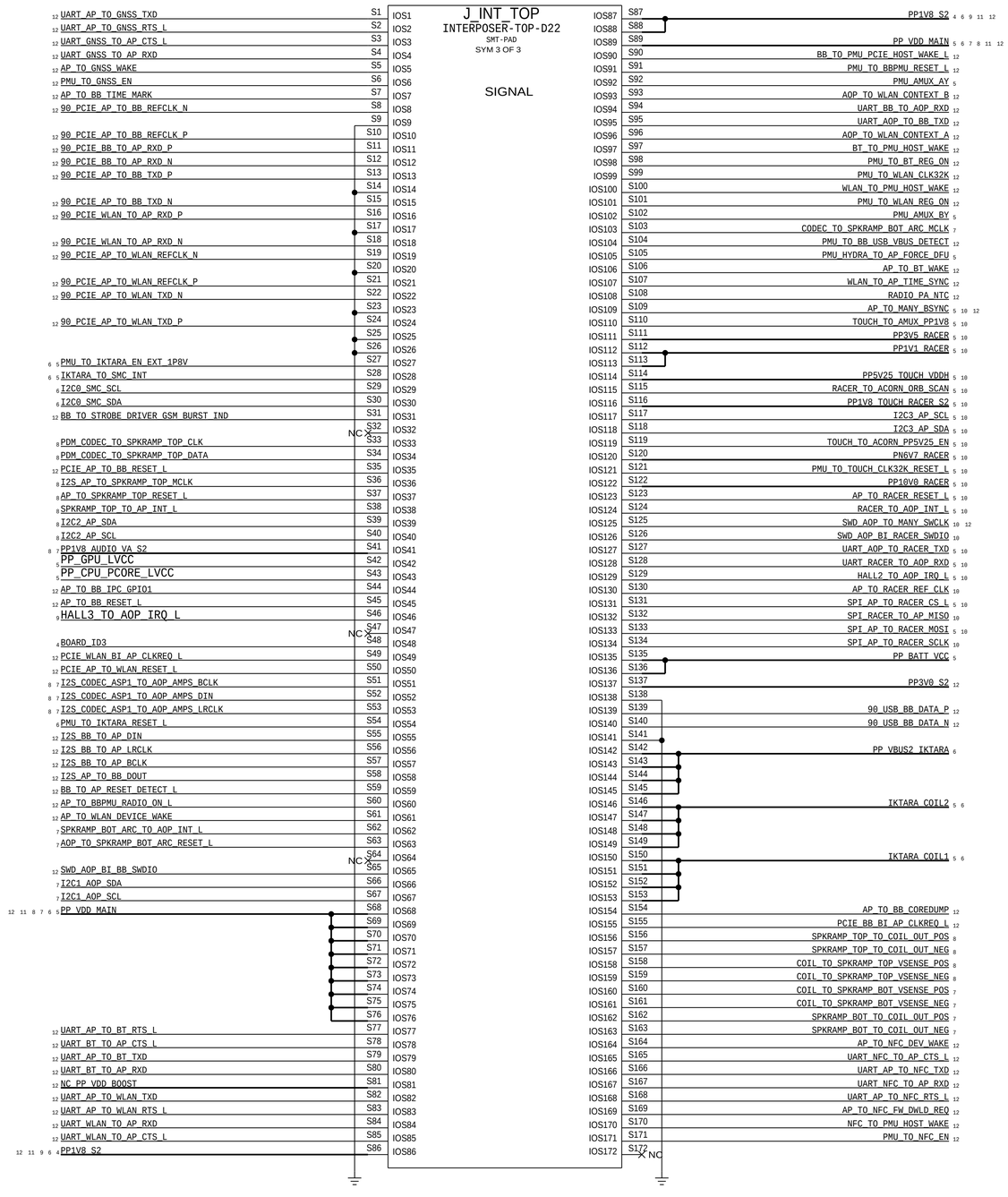

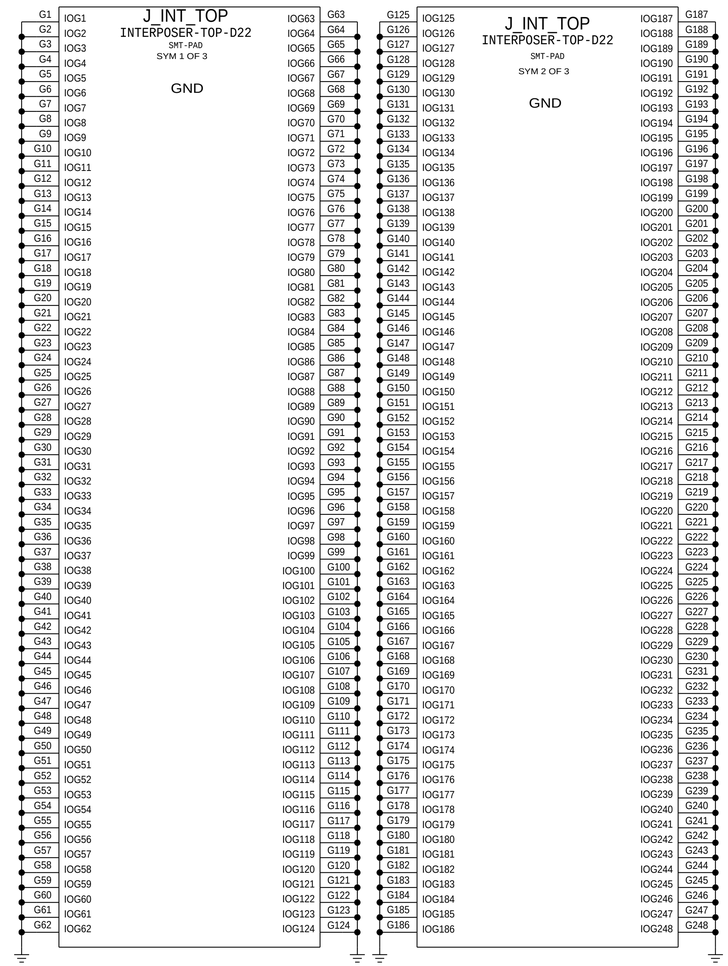

SYNC_MASTER=m1b_bot	SYNC_DATE=04/04/2017
PAGE TITLE	I/O: Interposer (Top)
Apple Inc.	DRAWING NUMBER 051-02247 SIZE D
	REVISION 7.0.0
NOTICE OF PROPRIETARY PROPERTY: THE INFORMATION CONTAINED HEREIN IS THE PROPRIETARY PROPERTY OF APPLE INC. THE POSESSOR AGREES TO THE FOLLOWING: I TO MAINTAIN THIS DOCUMENT IN CONFIDENCE II NOT TO REPRODUCE OR COPY IT III NOT TO REVEAL OR PUBLISH IT IN WHOLE OR PART IV ALL RIGHTS RESERVED	BRANCH evt-1
	PAGE 66 OF 80
	SHEET 11 OF 34

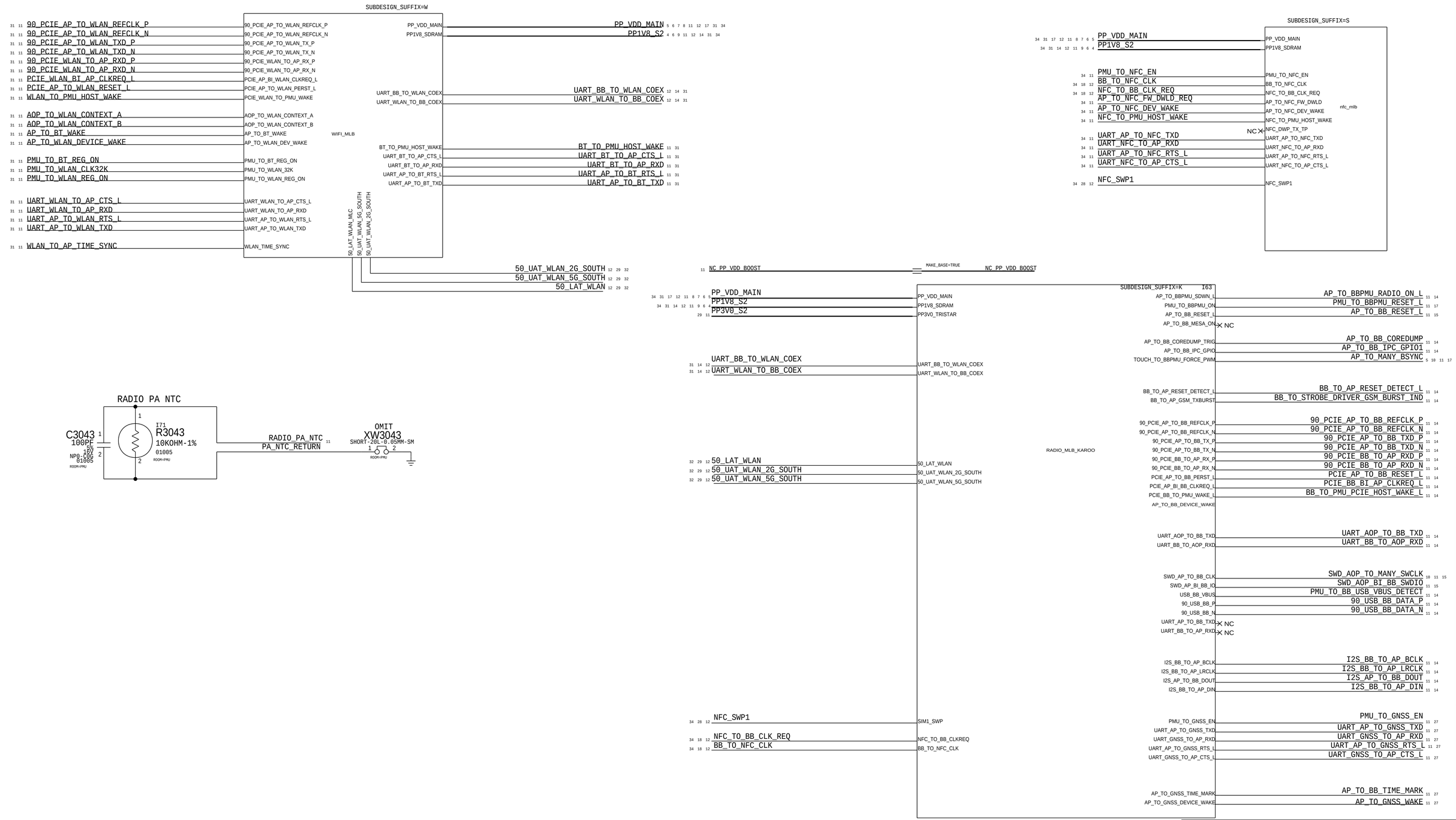

SYNC_DATE=07/29/2016

PAGE TITLE: RADIOS

Apple Inc.

DRAWING NUMBER: 051-02247 | SIZE: D

REVISION: 7.0.0

BRANCH: evt-1

PAGE: 80 OF 80

SHEET: 12 OF 34

NOTICE OF PROPRIETARY PROPERTY:

THE INFORMATION CONTAINED HEREIN IS THE PROPRIETARY PROPERTY OF APPLE INC.
THE POSESSOR AGREES TO THE FOLLOWING:

I TO MAINTAIN THIS DOCUMENT IN CONFIDENCE

II NOT TO REPRODUCE OR COPY IT

III NOT TO REVEAL OR PUBLISH IT IN WHOLE OR PART

IV ALL RIGHTS RESERVED

1. ALL RESISTANCE VALUES ARE IN OHMS, 0.1 WATT +/- 5%.
2. ALL CAPACITANCE VALUES ARE IN MICROFARADS.
3. ALL CRYSTALS & OSCILLATOR VALUES ARE IN HERTZ.

REV	ECN	DESCRIPTION OF REVISION	CK APPD / DATE
7	0008448938	ENGINEERING RELEASED	2017-04-11

ICE17.2 RADIO_MLB

Tue Apr 11 16:10:08 2017

PDF PAGE	CSA PAGE	CONTENTS
2	2	BASEBAND
3	3	BASEBAND MEMORY/DEBUG
4	4	BASEBAND POWER
5	5	BASEBAND PMIC
6	6	TRANSCEIVERS
7	7	ET MODULATOR
8	8	TDD TRANSMIT
9	9	FDD TRANSMIT
10	10	PRIMARY RECEIVE
11	11	LOWER ANTENNA & COUPLERS
12	12	DIVERSITY RECEIVE ASM'S
13	13	DIVERSITY RECEIVE LNA'S
14	14	UPPER ANTENNA FEEDS
15	15	GNSS
16	16	TEST POINTS & SIM

ALTERNATES

PART NUMBER	ALTERNATE FOR PART NUMBER	REFERENCE DESIGNATOR(S)	DESCRIPTION	BOM OPTION
197S00040	197S00044	VTCXO_K	AVX VC-TCXO	?
197S00042	197S00044	VTCXO_K	NDK VC-TCXO	?
335S00013	335S0894	EPROM_K	ON SEMI EEPROM	?
138S0719	138S1103	C522_K	MURATA	?
138S00133	138S00128	C509_K, C523_K, C605_K, C624_K, C626_K, C1114_K, C1116_K	MURATA	?
138S00049	138S00032	C402_K, C433_K, C437_K, C510_K, C720_K	MURATA	?
138S0831	138S00032	C402_K, C433_K, C437_K, C510_K, C720_K	MURATA	?
138S00086	138S0884	C500_K, C501_K, C502_K, C514_K, C515_K	MURATA	?
339S00363	339S00353	GNSS_K	PILSNER STATS	?

BOM OPTIONS

PART#	QTY	DESCRIPTION	REFERENCE DESIGNATOR(S)	CRITICAL	BOM OPTION
998-05780	1	BASEBAND, UNFUSED	U_BB_K	CRITICAL	BB_UNFUSED
998-05781	1	BASEBAND, LOCAL FUSED	U_BB_K	CRITICAL	BB_LOCAL_FUSED
998-05782	1	BASEBAND, DEV FUSED	U_BB_K	CRITICAL	BB_DEV_FUSED
337S00244	1	BASEBAND, PRODUCTION FUSED	U_BB_K	CRITICAL	BB_PROD_FUSED
138S00159	7	CAP,SOFT-TERM,2.2UF,6.3V,0201,KYOCERA	C402_K,C437_K,C438_K,C433_K,C510_K,C720_K,C1001_K		SOFT_CAP
138S0831	7	CAP,TYPICAL,2.2UF,6.3V,0201,MURATA	C402_K,C437_K,C438_K,C433_K,C510_K,C720_K,C1001_K		TYPICAL_CAP

RADIO_MLB PORTS

POWER

28	27 20 19 18 17 12	IN	PP_VDD_MAIN	
28 27 26 23 18 17 16 15 14 12	29	IN	PP1V8_S2	
	29 12	IN	PP3V0_S2	

CLOCKS

PMU_TO_BB_GNSS_32K

BB CONTROL

28 17 14 12	IN	AP_TO_BBPMU_RADIO_ON_L	
28 17 12	IN	PMU_TO_BBPMU_RESET_L	
28 15 12	IN	AP_TO_BB_RESET_L	
14 12	OUT	BB_TO_AP_RESET_DETECT_L	
28 14 12	OUT	BB_TO_STROBE_DRIVER_GSM_BURST_IND	
28 14	IN	AP_TO_BB_MESA_ON_K	
14 12	IN	AP_TO_BB_COREDUMP	
28 17 12	IN	AP_TO_MANY_BSYNC	
14 12	IN	AP_TO_BB_IPC_GPIO1	

PCIE

28 14 12	IN	90_PCIE_AP_TO_BB_REFCLK_P	
28 14 12	IN	90_PCIE_AP_TO_BB_REFCLK_N	
28 14 12	IN	90_PCIE_AP_TO_BB_TXD_P	
28 14 12	IN	90_PCIE_AP_TO_BB_TXD_N	
28 14 12	OUT	90_PCIE_BB_TO_AP_RXD_P	
28 14 12	OUT	90_PCIE_BB_TO_AP_RXD_N	
28 14 12	IN	PCIE_AP_TO_BB_RESET_L	
16 2	IO	PCIE_BB_BI_AP_CLKREQ_L	
28 14 12	OUT	BB_TO_PMU_PCIE_HOST_WAKE_L	
		AP_TO_BB_DEVICE_WAKE	

UART

28 14	IN	UART_AP_TO_BB_TXD_K	
28 14	OUT	UART_BB_TO_AP_RXD_K	

AOP

14 12	IN	UART_AOP_TO_BB_TXD	
14 12	OUT	UART_BB_TO_AOP_RXD	

AUDIO

14 12	OUT	I2S_BB_TO_AP_BCLK	
14 12	OUT	I2S_BB_TO_AP_LRCLK	
14 12	IN	I2S_AP_TO_BB_DOUT	
14 12	OUT	I2S_BB_TO_AP_DIN	

WLAN

28 14 12	IN	UART_BB_TO_WLAN_COEX	
28 14 12	OUT	UART_WLAN_TO_BB_COEX	

NFC

16	IO	NFC_SWP1	
18 12	IN	NFC_TO_BB_CLK_REQ	
28 18 12	OUT	BB_TO_NFC_CLK	

GNSS

28 27 12	IN	PMU_TO_GNSS_EN	
28 27 12	IN	UART_AP_TO_GNSS_TXD	
28 27 12	OUT	UART_GNSS_TO_AP_RXD	
28 27 12	IN	UART_AP_TO_GNSS_RTS_L	
28 27 12	OUT	UART_GNSS_TO_AP_CTS_L	
28 27 12	IN	AP_TO_BB_TIME_MARK	
27 12	IN	AP_TO_GNSS_WAKE	

DEBUG

28 15 12	IN	SWD_AOP_TO_MANY_SWCLK	
16 3	IO	SWD_AOP_BI_BB_SWDIO	
28 14 12	IN	PMU_TO_BB_USB_VBUS_DETECT	
16 2	IO	90_USB_BB_DATA_P	
16 2	IO	90_USB_BB_DATA_N	

ANTENNA FEEDS

17	IO	50_LAT_WLAN
17	IO	50_UAT_WLAN_2G_SOUTH
17	IO	50_UAT_WLAN_5G_SOUTH

RADIO_MLB

DRAWING TITLE	SCH,MLB,BOT,X893
Apple Inc.	DRAWING NUMBER 051-02247 SIZE D
	REVISION 7.0.0
	BRANCH evt-1
	PAGE 1 OF 17
	SHEET 13 OF 34

NOTICE OF PROPRIETARY PROPERTY:
THE INFORMATION CONTAINED HEREIN IS THE PROPRIETARY PROPERTY OF APPLE INC.
THE POSESSOR AGREES TO THE FOLLOWING:
I TO MAINTAIN THIS DOCUMENT IN CONFIDENCE
II NOT TO REPRODUCE OR COPY IT
III NOT TO REVEAL OR PUBLISH IT IN WHOLE OR PART
IV ALL RIGHTS RESERVED

CONFIDENTIAL AND PROPRIETARY APPLE SYSTEM DESIGN. FOR REFERENCE PURPOSE ONLY - NOT A CHANGE REQUEST

BASEBAND

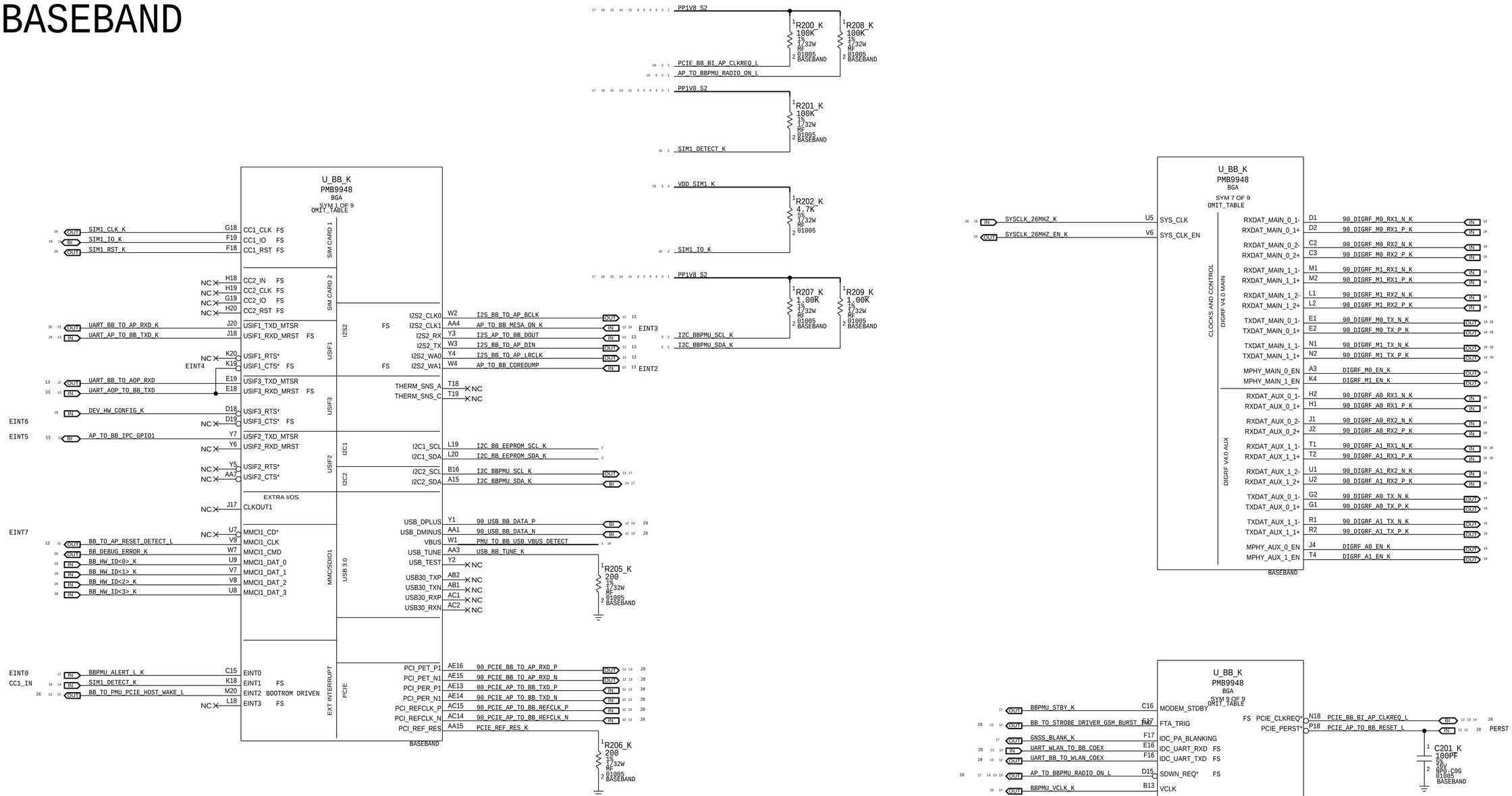

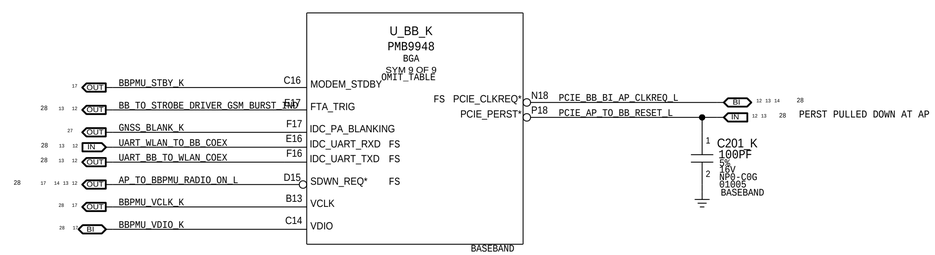

BB EEPROM

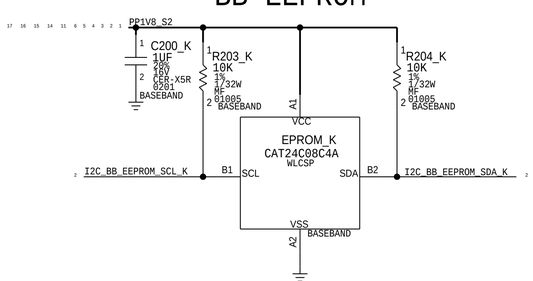

CONFIDENTIAL AND PROPRIETARY APPLE SYSTEM DESIGN. FOR REFERENCE PURPOSE ONLY - NOT A CHANGE REQUEST

PAGE TITLE	BASEBAND
Apple Inc.	DRAWING NUMBER 051-02247 · SIZE D
	REVISION 7.0.0
	BRANCH evt-1
	PAGE 2 OF 17
	SHEET 14 OF 34

NOTICE OF PROPRIETARY PROPERTY:
THE INFORMATION CONTAINED HEREIN IS THE PROPRIETARY PROPERTY OF APPLE INC.
THE POSESSOR AGREES TO THE FOLLOWING:
I TO MAINTAIN THIS DOCUMENT IN CONFIDENCE
II NOT TO REPRODUCE OR COPY IT
III NOT TO REVEAL OR PUBLISH IT IN WHOLE OR PART
IV ALL RIGHTS RESERVED

BASEBAND MEMORY/DEBUG

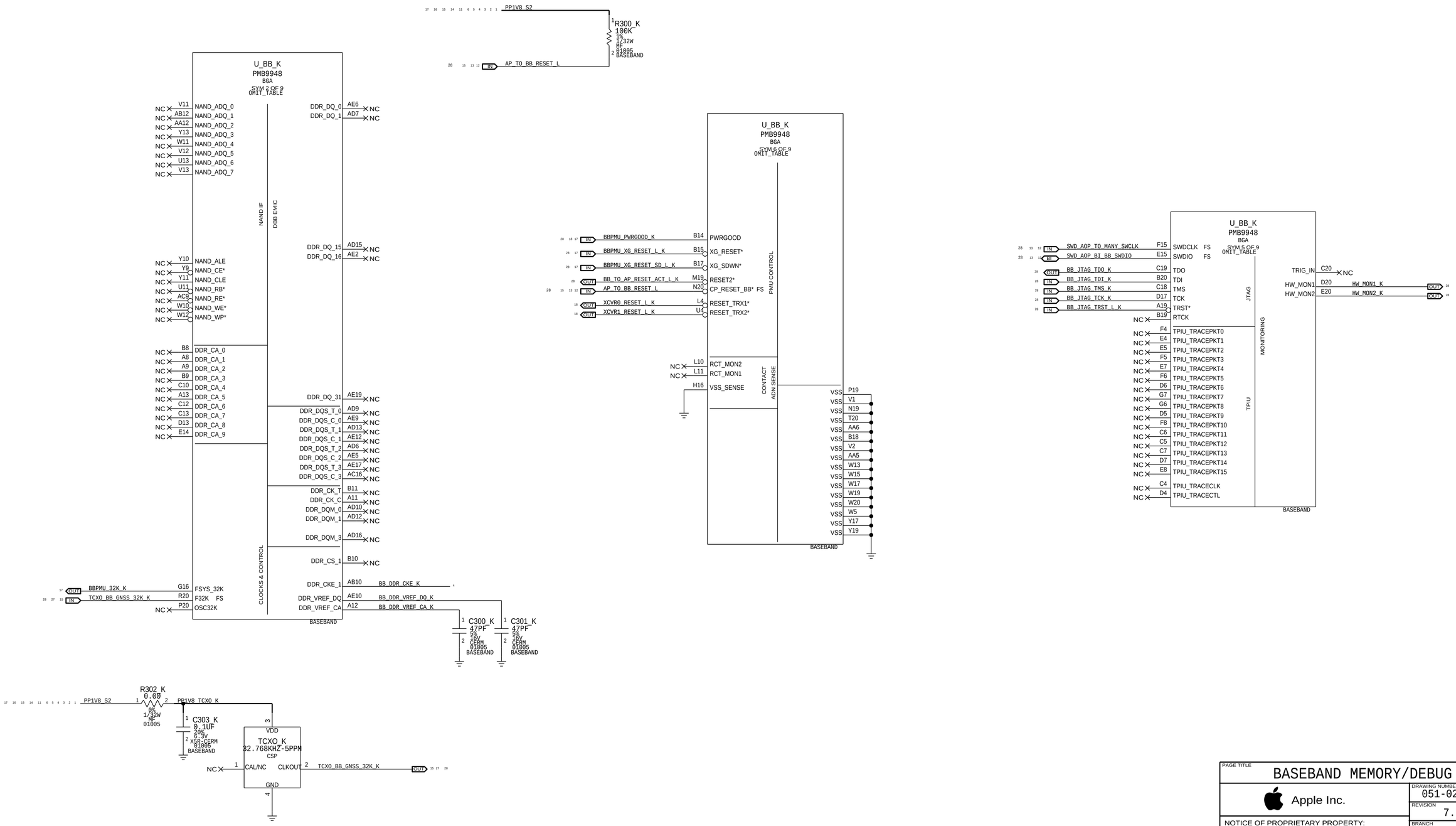

CONFIDENTIAL AND PROPRIETARY APPLE SYSTEM DESIGN. FOR REFERENCE PURPOSE ONLY - NOT A CHANGE REQUEST

PAGE TITLE	BASEBAND MEMORY/DEBUG
Apple Inc.	DRAWING NUMBER 051-02247 SIZE D
	REVISION 7.0.0
NOTICE OF PROPRIETARY PROPERTY: THE INFORMATION CONTAINED HEREIN IS THE PROPRIETARY PROPERTY OF APPLE INC. THE POSESSOR AGREES TO THE FOLLOWING: I TO MAINTAIN THIS DOCUMENT IN CONFIDENCE II NOT TO REPRODUCE OR COPY IT III NOT TO REVEAL OR PUBLISH IT IN WHOLE OR PART IV ALL RIGHTS RESERVED	BRANCH evt-1
	PAGE 3 OF 17
	SHEET 15 OF 34

BASEBAND POWER

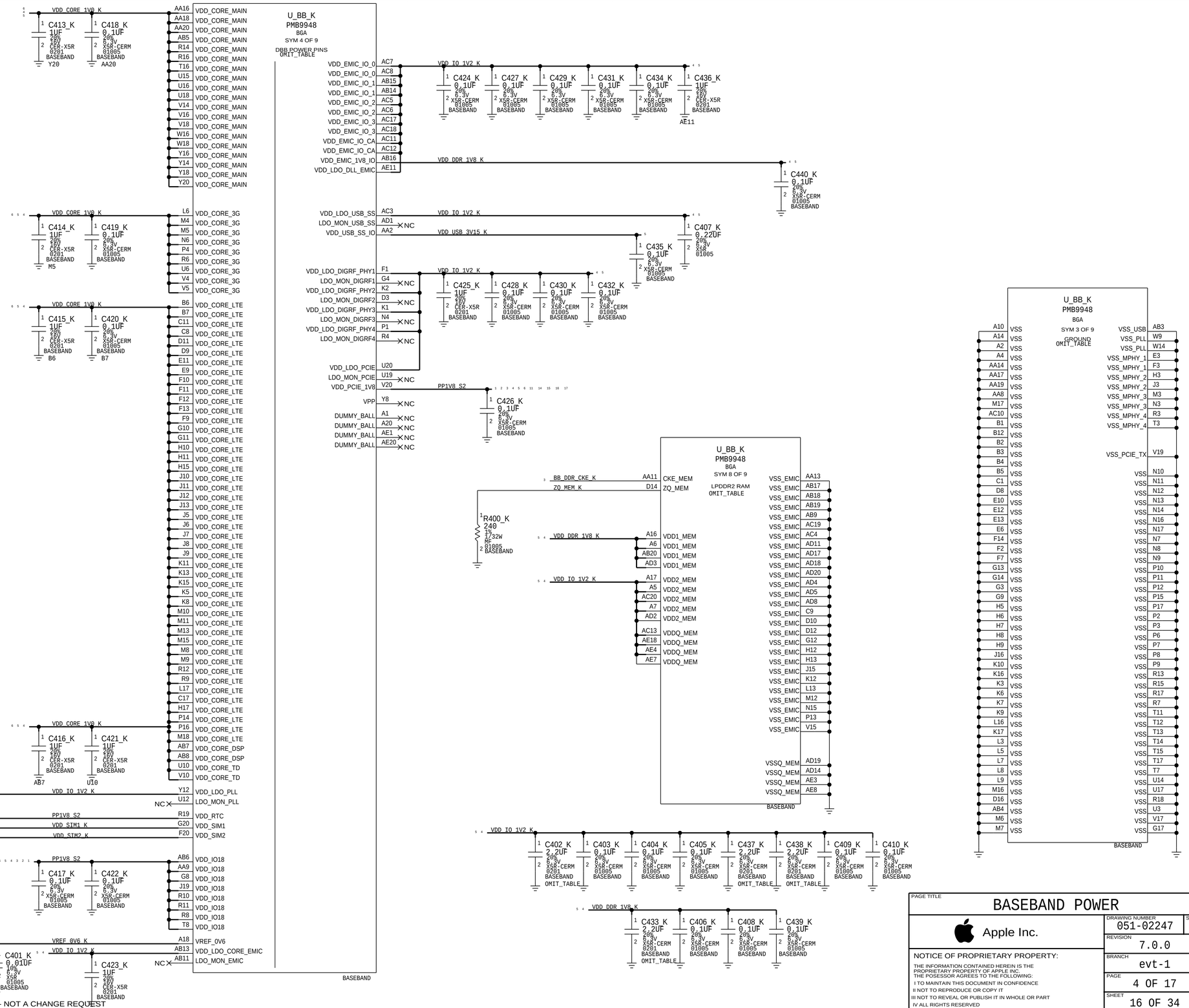

CONFIDENTIAL AND PROPRIETARY APPLE SYSTEM DESIGN. FOR REFERENCE PURPOSE ONLY - NOT A CHANGE REQUEST

PAGE TITLE: BASEBAND POWER

Apple Inc.

DRAWING NUMBER: 051-02247 | SIZE: D

REVISION: 7.0.0

BRANCH: evt-1

PAGE: 4 OF 17

SHEET: 16 OF 34

NOTICE OF PROPRIETARY PROPERTY:
THE INFORMATION CONTAINED HEREIN IS THE PROPRIETARY PROPERTY OF APPLE INC.
THE POSESSOR AGREES TO THE FOLLOWING:
I TO MAINTAIN THIS DOCUMENT IN CONFIDENCE
II NOT TO REPRODUCE OR COPY IT
III NOT TO REVEAL OR PUBLISH IT IN WHOLE OR PART
IV ALL RIGHTS RESERVED

BASEBAND PMIC

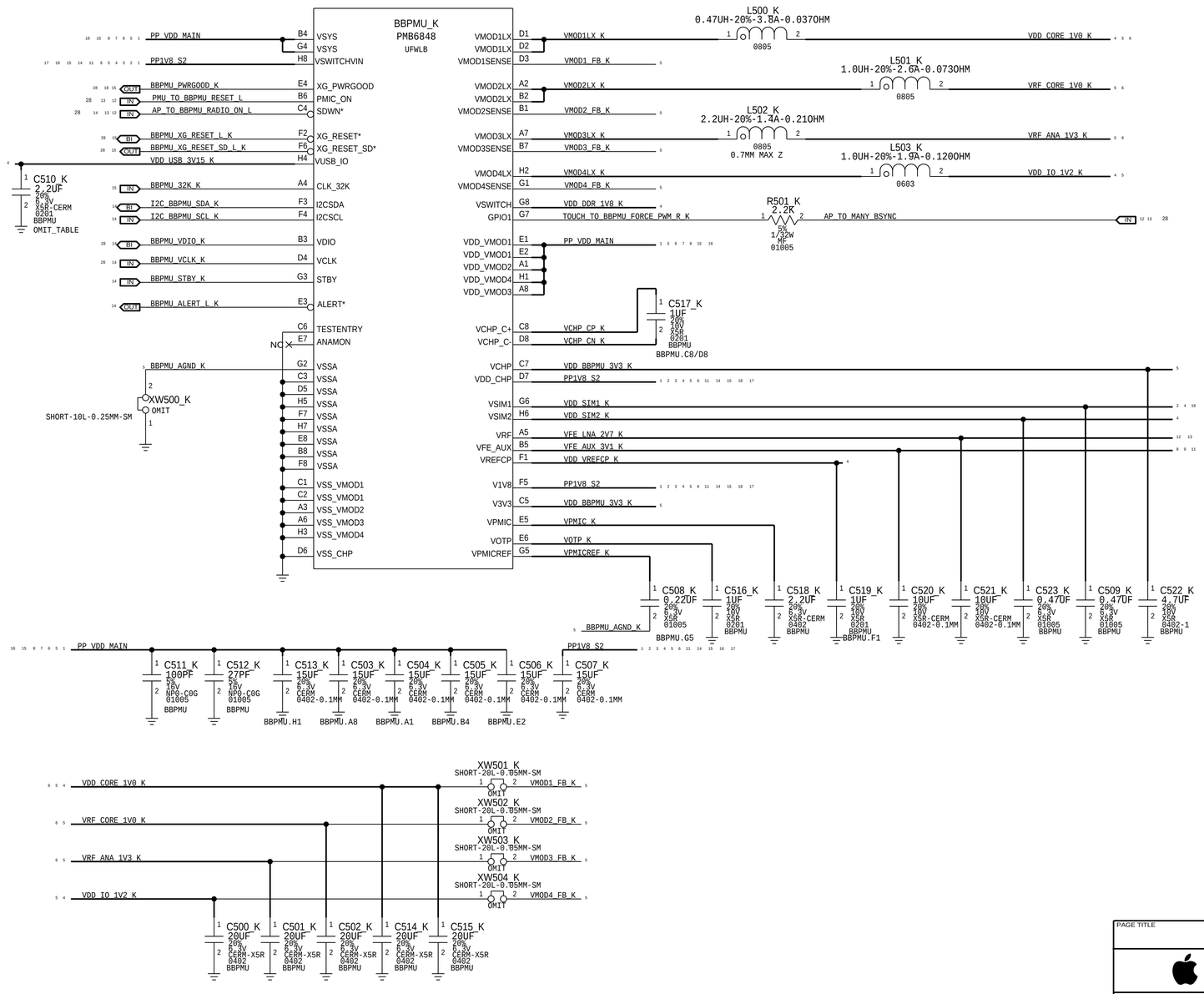

PAGE TITLE	BASEBAND PMIC
Apple Inc.	DRAWING NUMBER 051-02247 · SIZE D
	REVISION 7.0.0
	BRANCH evt-1
	PAGE 5 OF 17
	SHEET 17 OF 34

NOTICE OF PROPRIETARY PROPERTY:
THE INFORMATION CONTAINED HEREIN IS THE PROPRIETARY PROPERTY OF APPLE INC.
THE POSESSOR AGREES TO THE FOLLOWING:
I TO MAINTAIN THIS DOCUMENT IN CONFIDENCE
II NOT TO REPRODUCE OR COPY IT
III NOT TO REVEAL OR PUBLISH IT IN WHOLE OR PART
IV ALL RIGHTS RESERVED

CONFIDENTIAL AND PROPRIETARY APPLE SYSTEM DESIGN. FOR REFERENCE PURPOSE ONLY - NOT A CHANGE REQUEST

TRANSCEIVERS

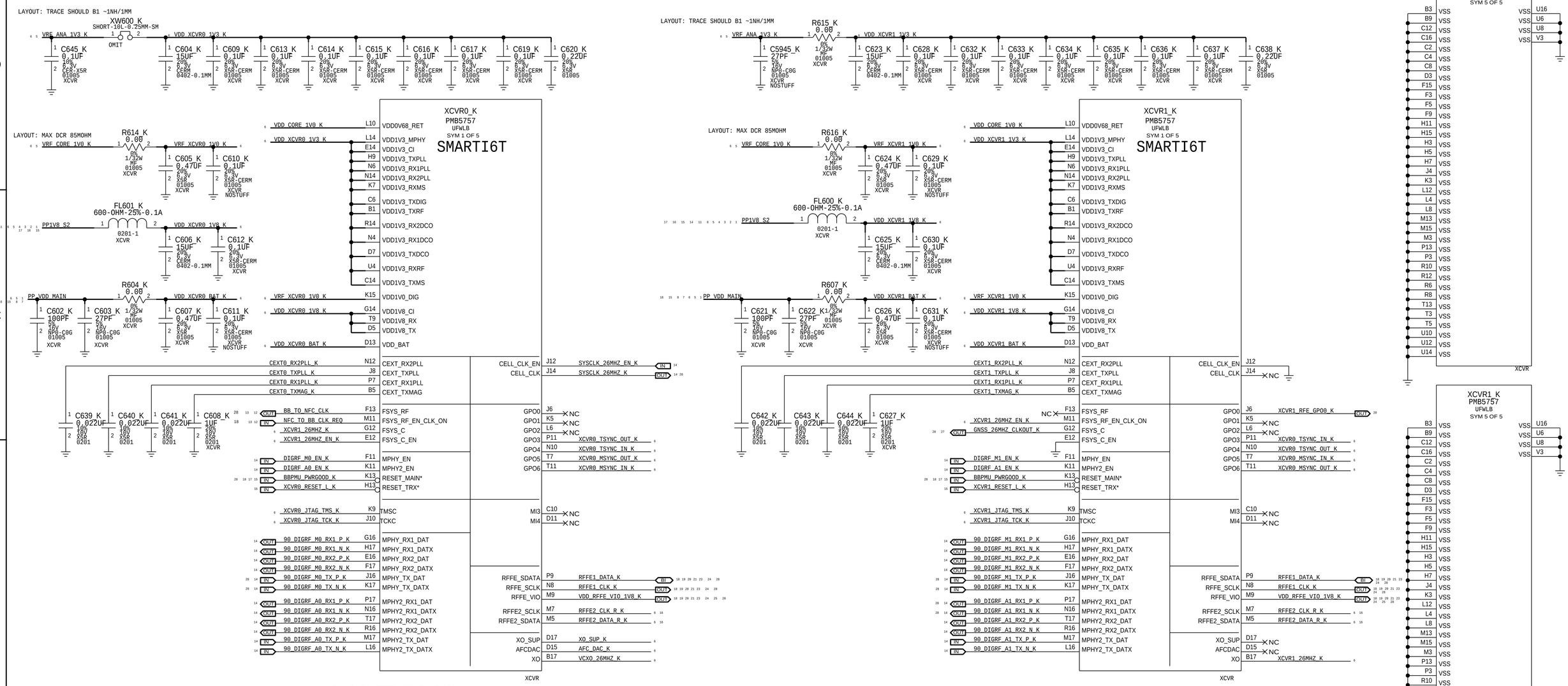

CONFIDENTIAL AND PROPRIETARY APPLE SYSTEM DESIGN. FOR REFERENCE PURPOSE ONLY - NOT A CHANGE REQUEST

PAGE TITLE	TRANSCEIVERS
Apple Inc.	DRAWING NUMBER 051-02247 SIZE D
	REVISION 7.0.0
	BRANCH evt-1
	PAGE 6 OF 17
	SHEET 18 OF 34

NOTICE OF PROPRIETARY PROPERTY:
THE INFORMATION CONTAINED HEREIN IS THE PROPRIETARY PROPERTY OF APPLE INC.
THE POSESSOR AGREES TO THE FOLLOWING:
I TO MAINTAIN THIS DOCUMENT IN CONFIDENCE
II NOT TO REPRODUCE OR COPY IT
III NOT TO REVEAL OR PUBLISH IT IN WHOLE OR PART
IV ALL RIGHTS RESERVED

ET MODULATOR

ALPES II MODULE

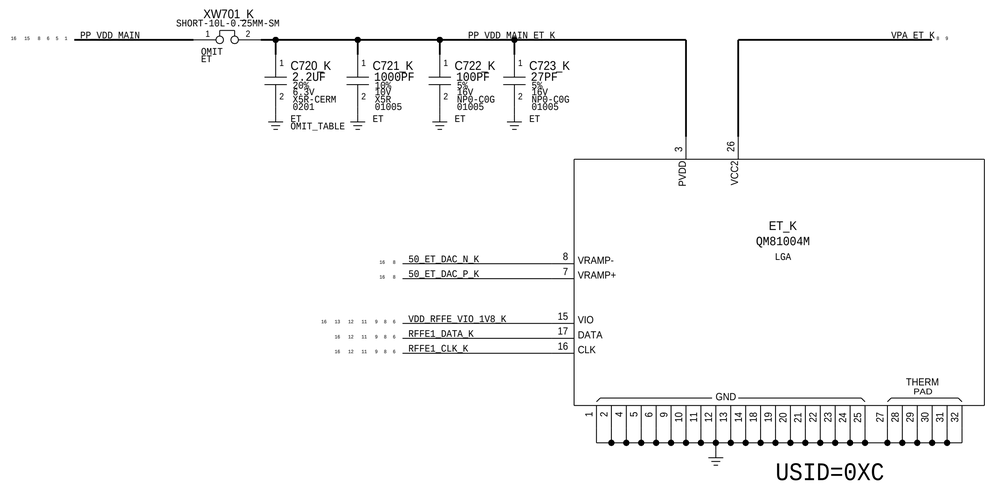

CONFIDENTIAL AND PROPRIETARY APPLE SYSTEM DESIGN. FOR REFERENCE PURPOSE ONLY - NOT A CHANGE REQUEST

PAGE TITLE	ET MODULATOR
Apple Inc.	DRAWING NUMBER 051-02247 SIZE D
	REVISION 7.0.0
	BRANCH evt-1
	PAGE 7 OF 17
	SHEET 19 OF 34

NOTICE OF PROPRIETARY PROPERTY:
THE INFORMATION CONTAINED HEREIN IS THE PROPRIETARY PROPERTY OF APPLE INC.
THE POSESSOR AGREES TO THE FOLLOWING:
I TO MAINTAIN THIS DOCUMENT IN CONFIDENCE
II NOT TO REPRODUCE OR COPY IT
III NOT TO REVEAL OR PUBLISH IT IN WHOLE OR PART
IV ALL RIGHTS RESERVED

TDD TRANSMIT

XCVR0 TX

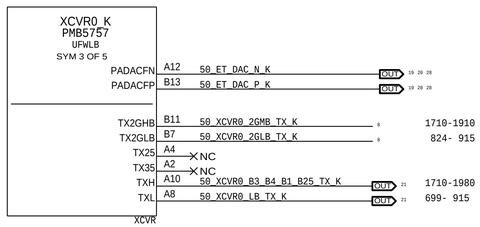

XCVR1 TX

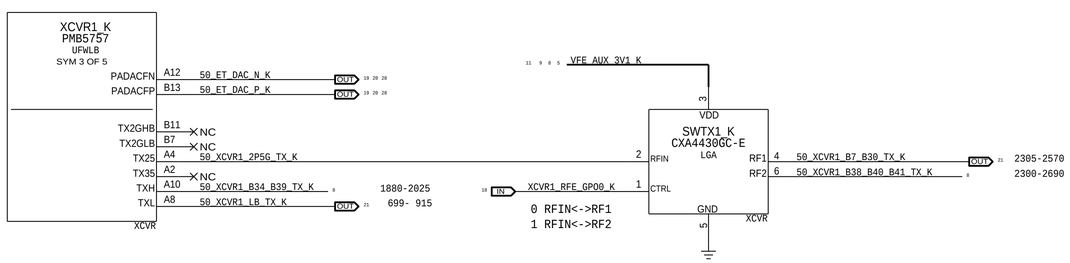

2G PA

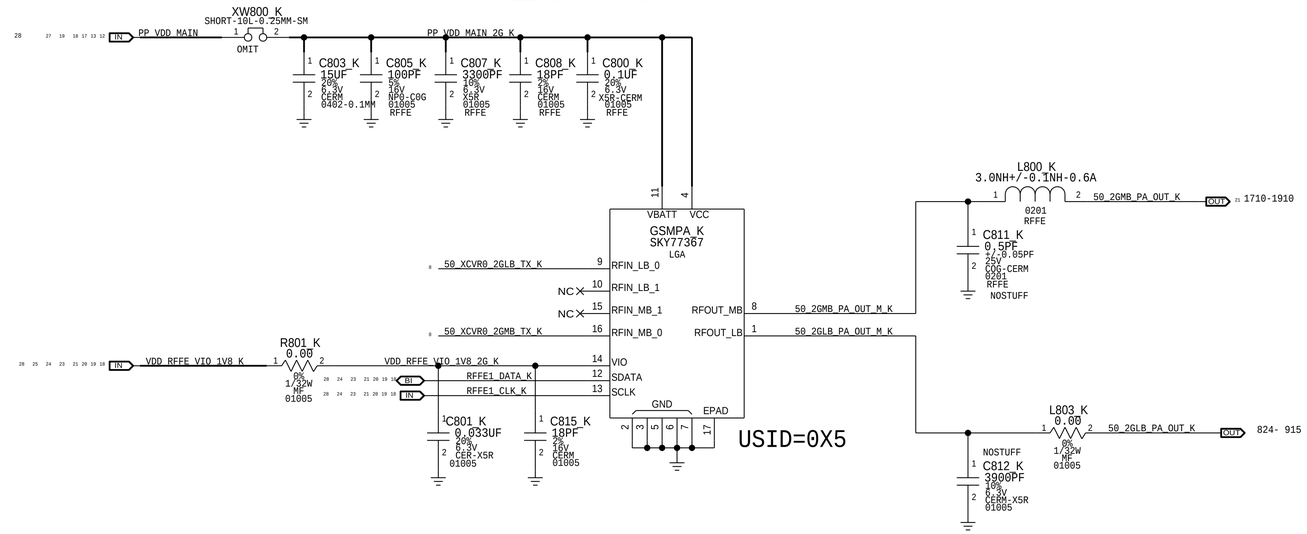

MB HB TDD S-PAD

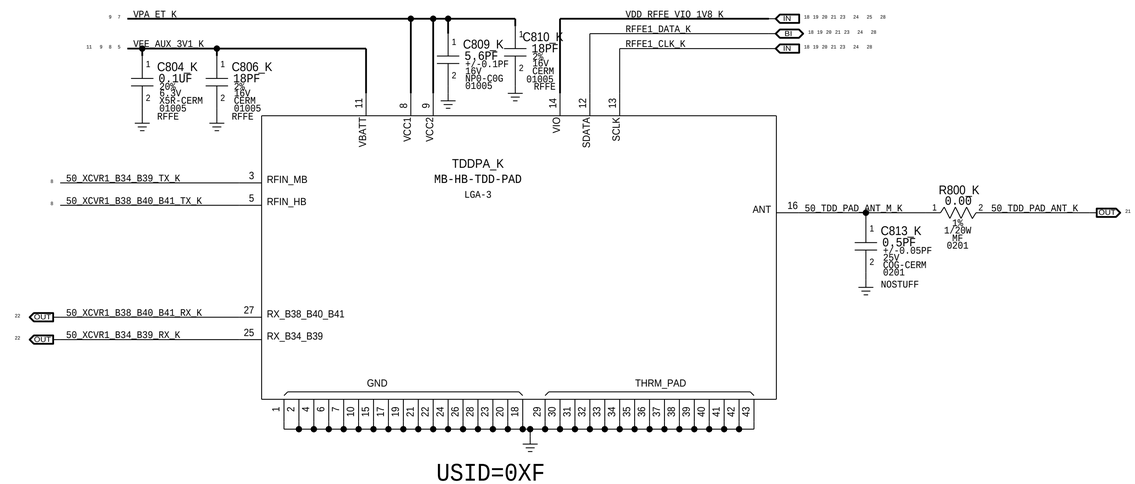

PAGE TITLE	TDD TRANSMIT
Apple Inc.	DRAWING NUMBER 051-02247 / SIZE D
	REVISION 7.0.0
NOTICE OF PROPRIETARY PROPERTY:	BRANCH evt-1
THE INFORMATION CONTAINED HEREIN IS THE PROPRIETARY PROPERTY OF APPLE INC. THE POSESSOR AGREES TO THE FOLLOWING: I TO MAINTAIN THIS DOCUMENT IN CONFIDENCE II NOT TO REPRODUCE OR COPY IT III NOT TO REVEAL OR PUBLISH IT IN WHOLE OR PART IV ALL RIGHTS RESERVED	PAGE 8 OF 17
	SHEET 20 OF 34

CONFIDENTIAL AND PROPRIETARY APPLE SYSTEM DESIGN. FOR REFERENCE PURPOSE ONLY - NOT A CHANGE REQUEST

FDD TRANSMIT

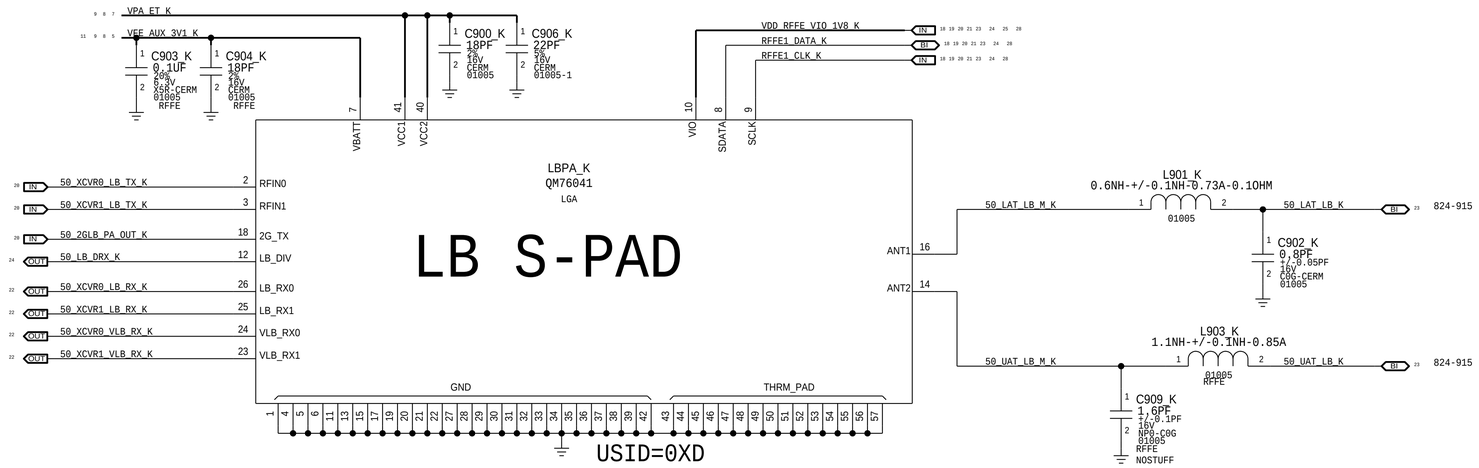

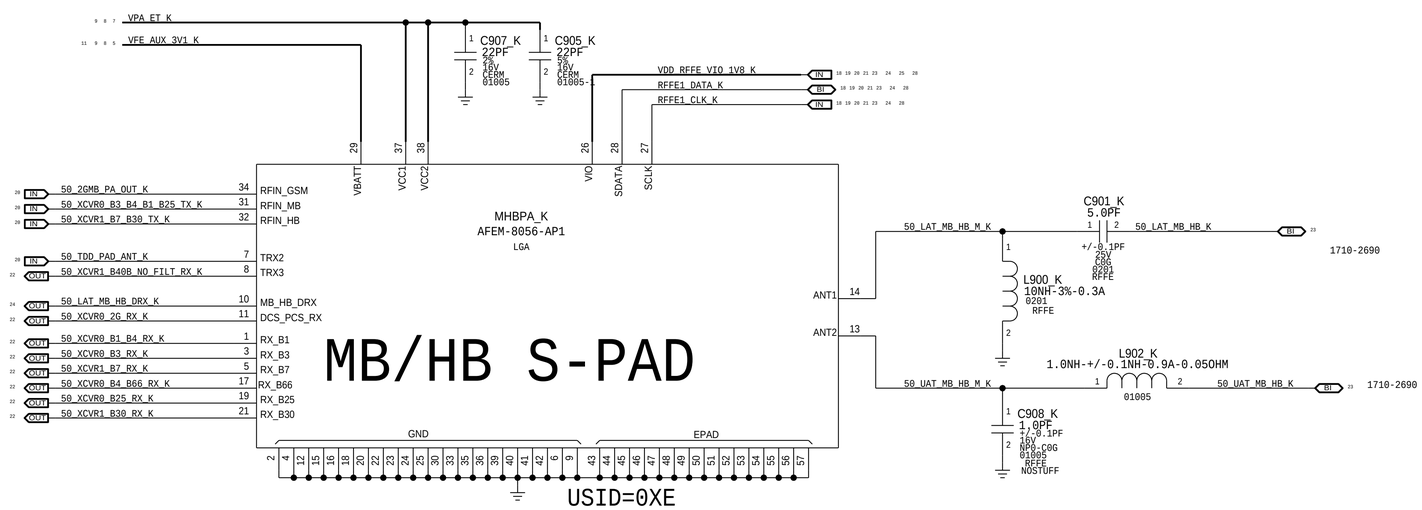

PAGE TITLE	FDD TRANSMIT
Apple Inc.	DRAWING NUMBER 051-02247 SIZE D
	REVISION 7.0.0
NOTICE OF PROPRIETARY PROPERTY: THE INFORMATION CONTAINED HEREIN IS THE PROPRIETARY PROPERTY OF APPLE INC. THE POSESSOR AGREES TO THE FOLLOWING: I TO MAINTAIN THIS DOCUMENT IN CONFIDENCE II NOT TO REPRODUCE OR COPY IT III NOT TO REVEAL OR PUBLISH IT IN WHOLE OR PART IV ALL RIGHTS RESERVED	BRANCH evt-1
	PAGE 9 OF 17
	SHEET 21 OF 34

CONFIDENTIAL AND PROPRIETARY APPLE SYSTEM DESIGN. FOR REFERENCE PURPOSE ONLY - NOT A CHANGE REQUEST

PRIMARY RECIEVE

XCVR0 PRX

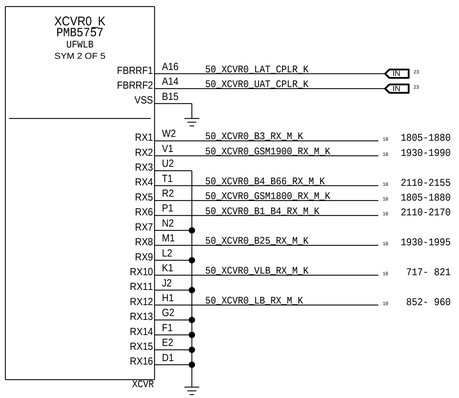

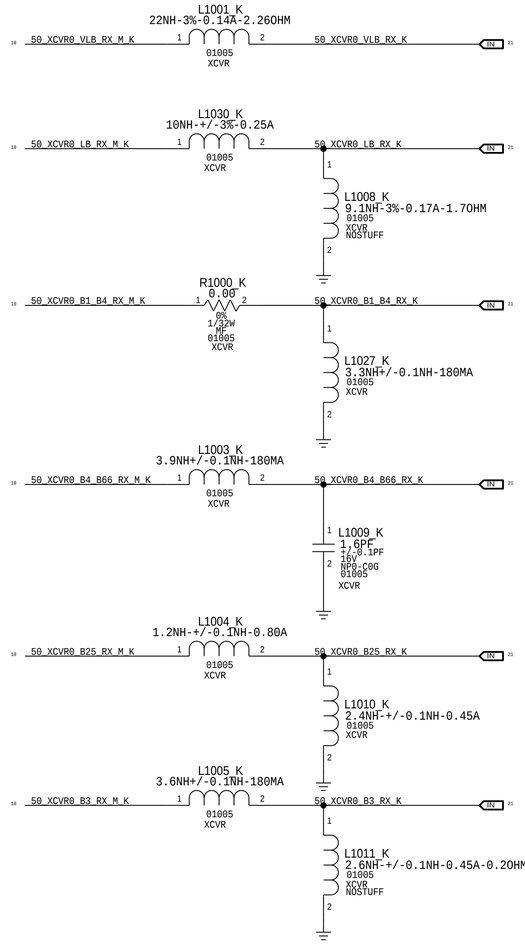

XCVR1 PRX

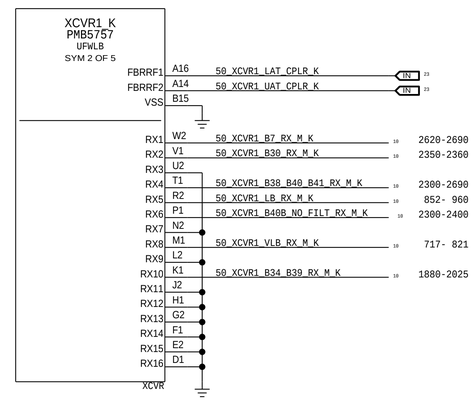

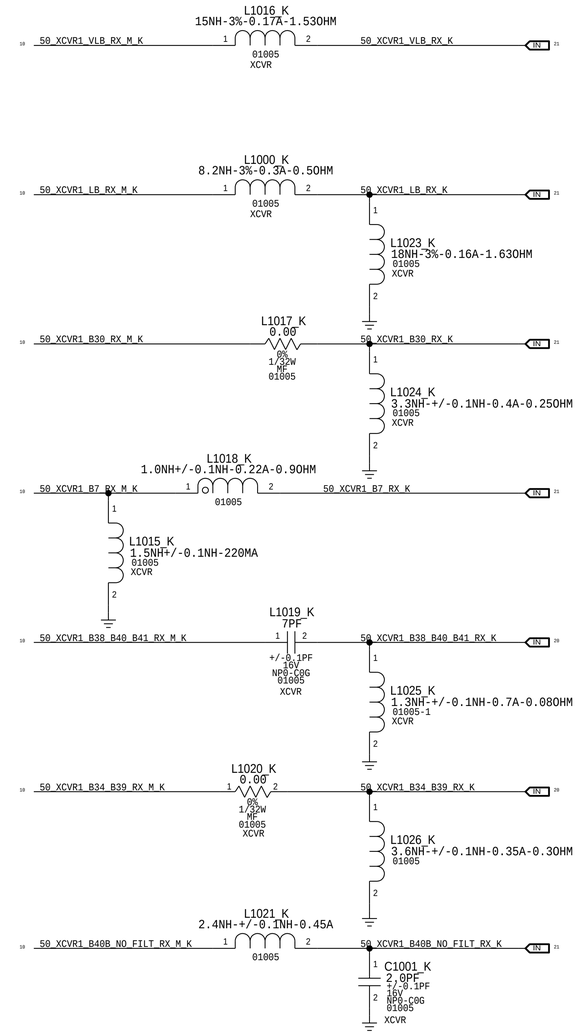

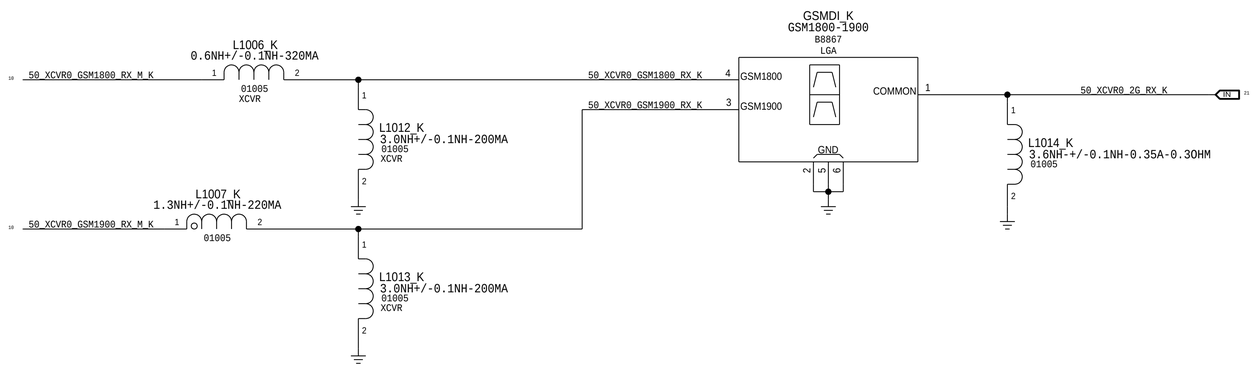

PAGE TITLE	PRIMARY RECEIVE
Apple Inc.	DRAWING NUMBER 051-02247 — SIZE D
	REVISION 7.0.0
	BRANCH evt-1
	PAGE 10 OF 17
	SHEET 22 OF 34

NOTICE OF PROPRIETARY PROPERTY:
THE INFORMATION CONTAINED HEREIN IS THE PROPRIETARY PROPERTY OF APPLE INC.
THE POSESSOR AGREES TO THE FOLLOWING:
I TO MAINTAIN THIS DOCUMENT IN CONFIDENCE
II NOT TO REPRODUCE OR COPY IT
III NOT TO REVEAL OR PUBLISH IT IN WHOLE OR PART
IV ALL RIGHTS RESERVED

CONFIDENTIAL AND PROPRIETARY APPLE SYSTEM DESIGN. FOR REFERENCE PURPOSE ONLY - NOT A CHANGE REQUEST

LOWER ANTENNA AND COUPLER

LOWER ANTENNA COUPLER

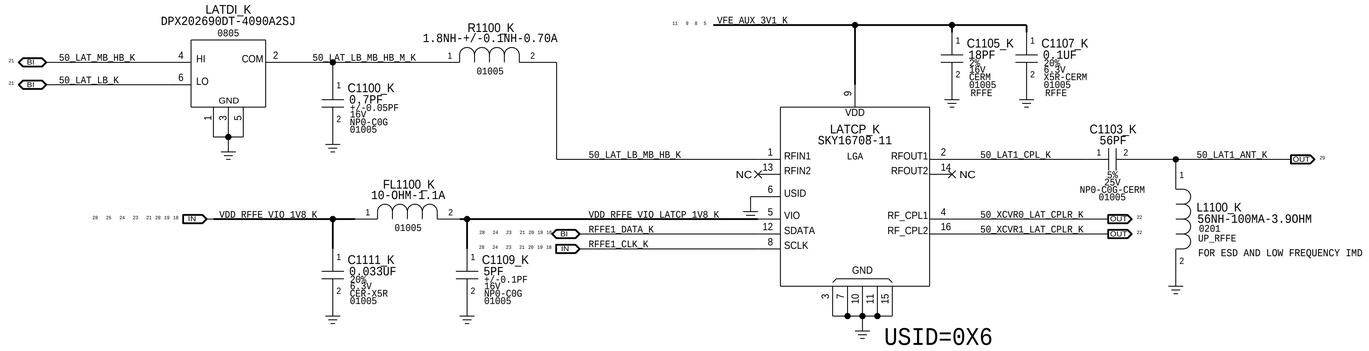

UPPER ANTENNA COUPLER

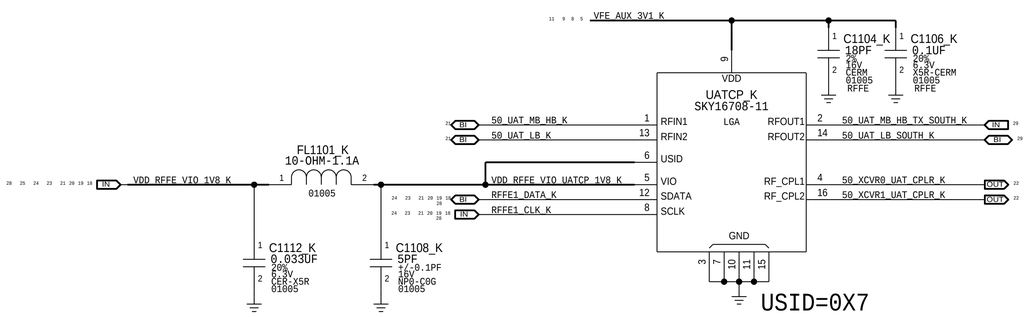

LAT TUNER GPO

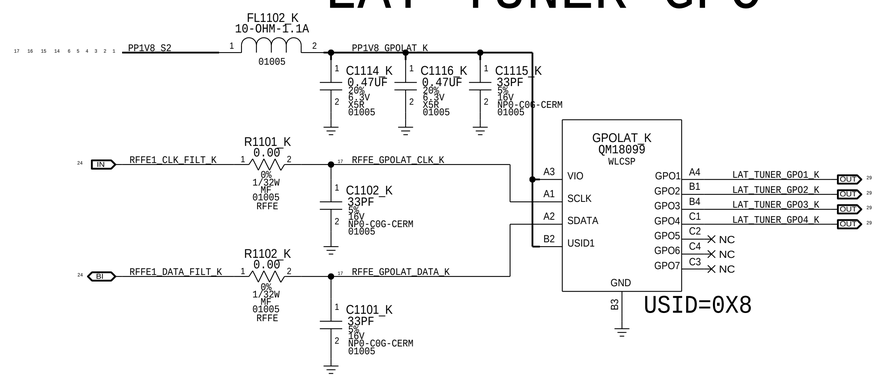

PAGE TITLE	LOWER ANTENNA & COUPLERS
Apple Inc.	DRAWING NUMBER 051-02247 · SIZE D
	REVISION 7.0.0
NOTICE OF PROPRIETARY PROPERTY: THE INFORMATION CONTAINED HEREIN IS THE PROPRIETARY PROPERTY OF APPLE INC. THE POSESSOR AGREES TO THE FOLLOWING: I TO MAINTAIN THIS DOCUMENT IN CONFIDENCE II NOT TO REPRODUCE OR COPY IT III NOT TO REVEAL OR PUBLISH IT IN WHOLE OR PART IV ALL RIGHTS RESERVED	BRANCH evt-1
	PAGE 11 OF 17
	SHEET 23 OF 34

CONFIDENTIAL AND PROPRIETARY APPLE SYSTEM DESIGN. FOR REFERENCE PURPOSE ONLY - NOT A CHANGE REQUEST

DIVERSITY RECEIVE ASM'S

XCVR0 DRX

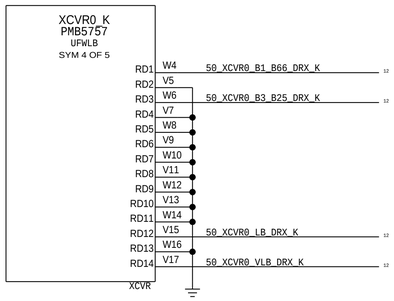

XCVR1 DRX

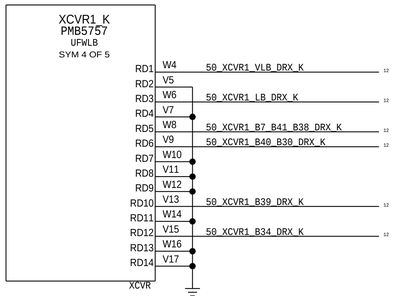

RFFE FILTERING

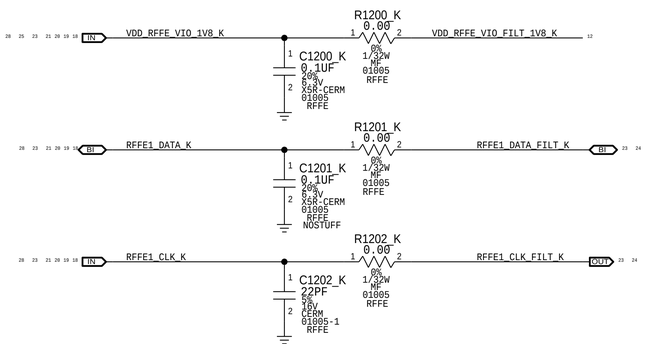

DRX DSM

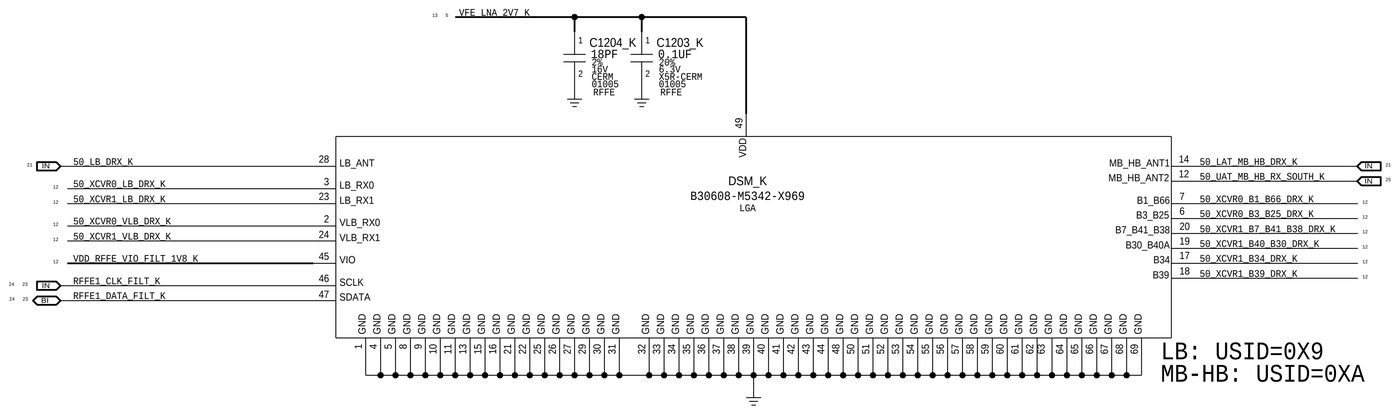

LB: USID=0X9
MB-HB: USID=0XA

CONFIDENTIAL AND PROPRIETARY APPLE SYSTEM DESIGN. FOR REFERENCE PURPOSE ONLY - NOT A CHANGE REQUEST

PAGE TITLE	DIVERSITY RECEIVE ASM'S
Apple Inc.	DRAWING NUMBER 051-02247 SIZE D
	REVISION 7.0.0
	BRANCH evt-1
	PAGE 12 OF 17
	SHEET 24 OF 34

NOTICE OF PROPRIETARY PROPERTY:
THE INFORMATION CONTAINED HEREIN IS THE PROPRIETARY PROPERTY OF APPLE INC.
THE POSESSOR AGREES TO THE FOLLOWING:
I TO MAINTAIN THIS DOCUMENT IN CONFIDENCE
II NOT TO REPRODUCE OR COPY IT
III NOT TO REVEAL OR PUBLISH IT IN WHOLE OR PART
IV ALL RIGHTS RESERVED

DIVERSITY RECEIVE LNAS

LB DRX LNA

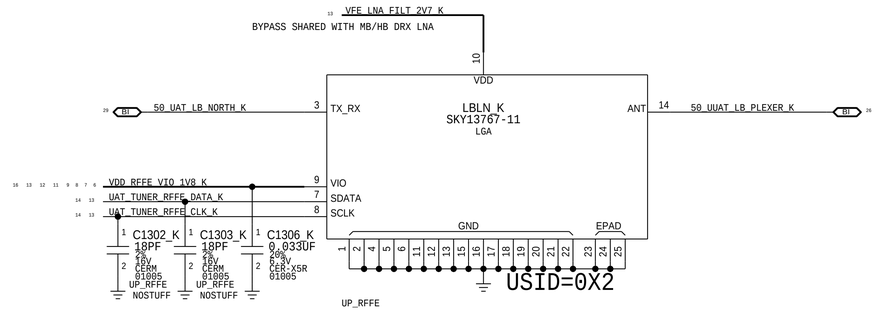

MB/HB DRX LNA

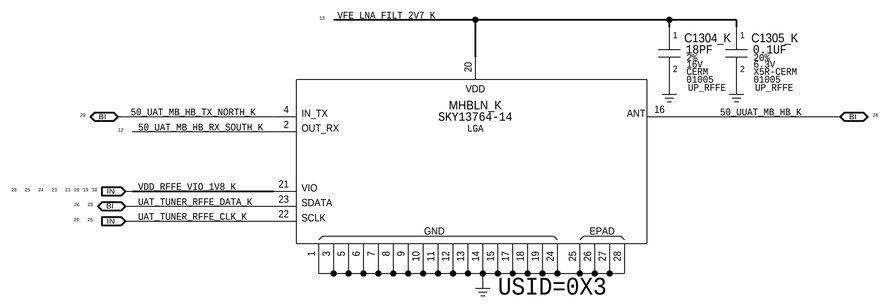

RFFE2 IMPEDANCE MATCHING

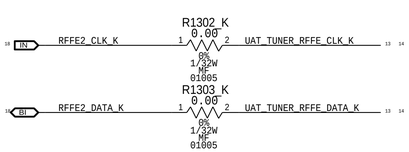

CONFIDENTIAL AND PROPRIETARY APPLE SYSTEM DESIGN. FOR REFERENCE PURPOSE ONLY - NOT A CHANGE REQUEST

PAGE TITLE: DIVERSITY RECEIVE LNA'S

Apple Inc.

DRAWING NUMBER: 051-02247 | SIZE: D

REVISION: 7.0.0

BRANCH: evt-1

PAGE: 13 OF 17

SHEET: 25 OF 34

NOTICE OF PROPRIETARY PROPERTY:
THE INFORMATION CONTAINED HEREIN IS THE PROPRIETARY PROPERTY OF APPLE INC.
THE POSESSOR AGREES TO THE FOLLOWING:
I TO MAINTAIN THIS DOCUMENT IN CONFIDENCE
II NOT TO REPRODUCE OR COPY IT
III NOT TO REVEAL OR PUBLISH IT IN WHOLE OR PART
IV ALL RIGHTS RESERVED

UPPER ANTENNA FEEDS

UAT1

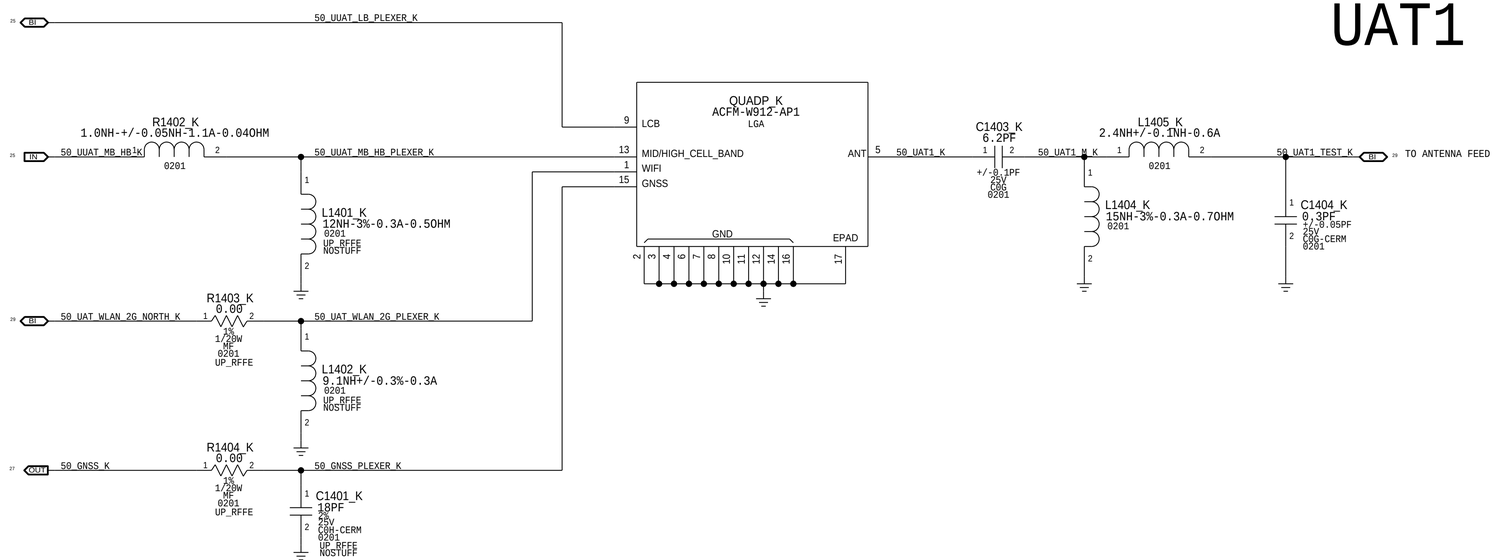

UAT TUNER GPO

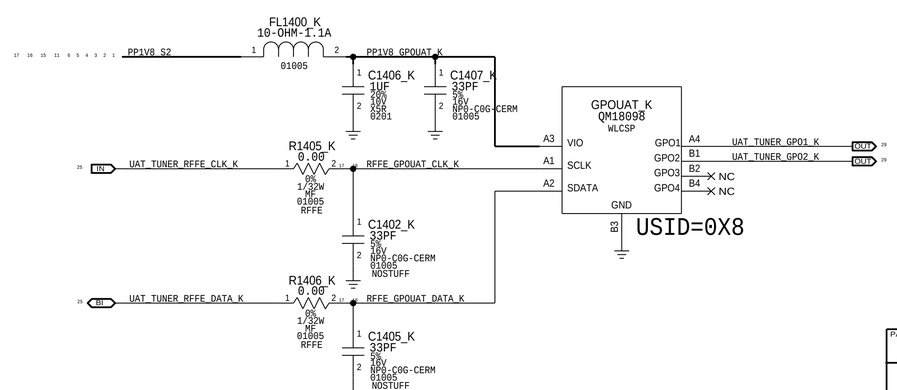

PAGE TITLE	UPPER ANTENNA FEEDS
Apple Inc.	DRAWING NUMBER 051-02247 — SIZE D
	REVISION 7.0.0
	BRANCH evt-1
	PAGE 14 OF 17
	SHEET 26 OF 34

NOTICE OF PROPRIETARY PROPERTY:
THE INFORMATION CONTAINED HEREIN IS THE PROPRIETARY PROPERTY OF APPLE INC.
THE POSESSOR AGREES TO THE FOLLOWING:
I TO MAINTAIN THIS DOCUMENT IN CONFIDENCE
II NOT TO REPRODUCE OR COPY IT
III NOT TO REVEAL OR PUBLISH IT IN WHOLE OR PART
IV ALL RIGHTS RESERVED

CONFIDENTIAL AND PROPRIETARY APPLE SYSTEM DESIGN. FOR REFERENCE PURPOSE ONLY - NOT A CHANGE REQUEST

GNSS LNA + RECEIVER

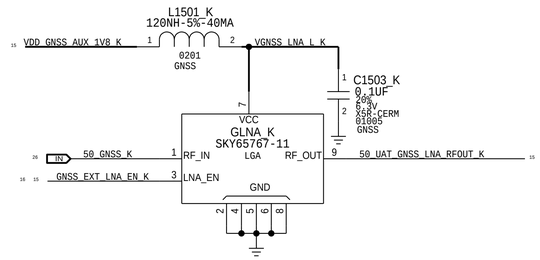

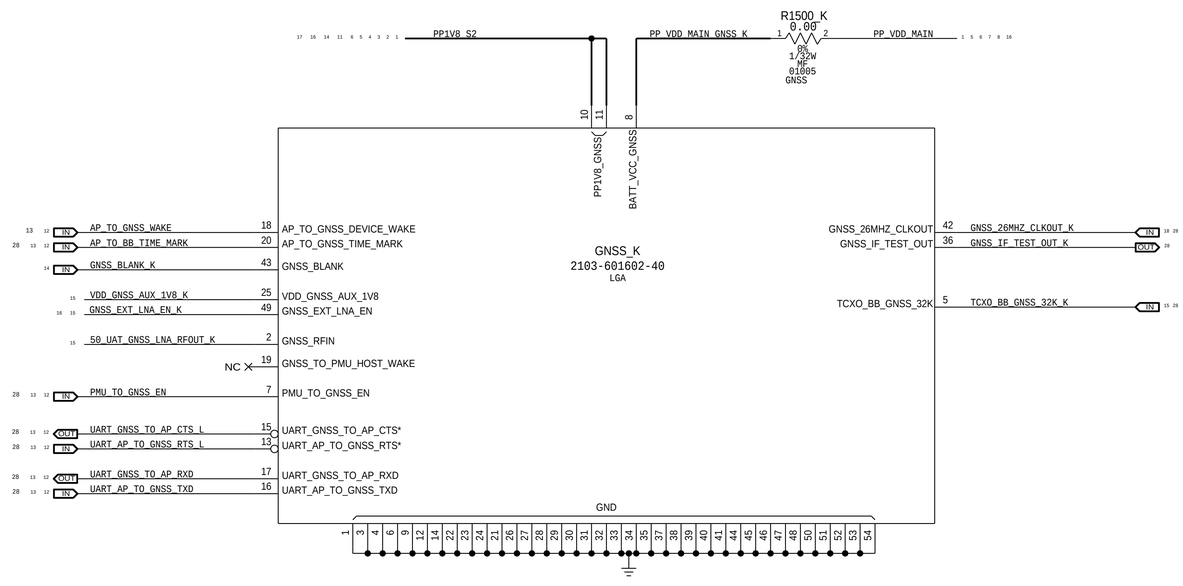

CONFIDENTIAL AND PROPRIETARY APPLE SYSTEM DESIGN. FOR REFERENCE PURPOSE ONLY - NOT A CHANGE REQUEST

PAGE TITLE: GNSS

Apple Inc.

DRAWING NUMBER: 051-02247 | SIZE: D

REVISION: 7.0.0

BRANCH: evt-1

PAGE: 15 OF 17

SHEET: 27 OF 34

NOTICE OF PROPRIETARY PROPERTY:
THE INFORMATION CONTAINED HEREIN IS THE PROPRIETARY PROPERTY OF APPLE INC.
THE POSESSOR AGREES TO THE FOLLOWING:
I TO MAINTAIN THIS DOCUMENT IN CONFIDENCE
II NOT TO REPRODUCE OR COPY IT
III NOT TO REVEAL OR PUBLISH IT IN WHOLE OR PART
IV ALL RIGHTS RESERVED

MLB TEST POINTS

BASEBAND

PP1600_K P2MM-NSM SM 1 AP_TO_BBPMU_RADIO_ON_L OMIT
PP1601_K P2MM-NSM SM 1 BBPMU_PWRGOOD_K OMIT
PP1602_K P2MM-NSM SM 1 BBPMU_XG_RESET_L_K OMIT
PP1603_K P2MM-NSM SM 1 BBPMU_XG_RESET_SD_L_K OMIT
PP1604_K P2MM-NSM SM 1 TCXO_BB_GNSS_32K_K OMIT
PP1605_K P2MM-NSM SM 1 BB_DEBUG_ERROR_K OMIT
PP1606_K P2MM-NSM SM 1 AP_TO_BB_MESA_ON_K OMIT
PP1607_K P2MM-NSM SM 1 BB_TO_STROBE_DRIVER_GSM_BURST_IND OMIT
PP1640_K P2MM-NSM SM 1 BB_TO_AP_RESET_ACT_L_K OMIT

RFFE

PP1648_K P2MM-NSM SM 1 VDD_RFFE_VIO_1V8_K OMIT
PP1649_K P2MM-NSM SM 1 RFFE1_CLK_K OMIT
PP1650_K P2MM-NSM SM 1 RFFE1_DATA_K OMIT
PP1653_K P2MM-NSM SM 1 RFFE1_CLK_K OMIT
PP1654_K P2MM-NSM SM 1 RFFE1_DATA_K OMIT
PP1651_K P2MM-NSM SM 1 RFFE2_CLK_R_K OMIT
PP1652_K P2MM-NSM SM 1 RFFE2_DATA_R_K OMIT
PP1655_K P2MM-NSM SM 1 RFFE_GPOUAT_CLK_K OMIT
PP1656_K P2MM-NSM SM 1 RFFE_GPOUAT_DATA_K OMIT

PLACE NEAR LBPA/MHBPA
PLACE NEAR XCVR0
PLACE NEAR XCVR1

XCVR

PP1615_K P2MM-NSM SM 1 SYSCLK_26MHZ_K OMIT
PP1657_K P2MM-NSM SM 1 BB_TO_NFC_CLK OMIT
PP1658_K P2MM-NSM SM 1 GNSS_26MHZ_CLKOUT_K OMIT

ETIC

PP1616_K P2MM-NSM SM 1 50_ET_DAC_P_K OMIT
PP1617_K P2MM-NSM SM 1 50_ET_DAC_N_K OMIT

BBPMU

PP1627_K P2MM-NSM SM 1 BBPMU_VCLK_K OMIT
PP1628_K P2MM-NSM SM 1 BBPMU_VDIO_K OMIT
PP1608_K P2MM-NSM SM 1 AP_TO_MANY_BSYNC OMIT

PCIE

PP1641_K P2MM-NSM SM 1 90_PCIE_AP_TO_BB_REFCLK_P OMIT
PP1642_K P2MM-NSM SM 1 90_PCIE_AP_TO_BB_REFCLK_N OMIT
PP1609_K P2MM-NSM SM 1 90_PCIE_AP_TO_BB_TXD_P OMIT
PP1610_K P2MM-NSM SM 1 90_PCIE_AP_TO_BB_TXD_N OMIT
PP1635_K P2MM-NSM SM 1 90_PCIE_BB_TO_AP_RXD_P OMIT
PP1611_K P2MM-NSM SM 1 90_PCIE_BB_TO_AP_RXD_N OMIT
PP1612_K P2MM-NSM SM 1 PCIE_AP_TO_BB_RESET_L OMIT
PP1613_K P2MM-NSM SM 1 PCIE_BB_BI_AP_CLKREQ_L OMIT
PP1614_K P2MM-NSM SM 1 BB_TO_PMU_PCIE_HOST_WAKE_L OMIT

GNSS

PP1618_K P2MM-NSM SM 1 GNSS_EXT_LNA_EN_K OMIT
PP1619_K P2MM-NSM SM 1 PMU_TO_GNSS_EN OMIT
PP1620_K P2MM-NSM SM 1 UART_GNSS_TO_AP_RXD OMIT
PP1621_K P2MM-NSM SM 1 UART_AP_TO_GNSS_TXD OMIT
PP1622_K P2MM-NSM SM 1 UART_GNSS_TO_AP_CTS_L OMIT
PP1623_K P2MM-NSM SM 1 UART_AP_TO_GNSS_RTS_L OMIT
PP1624_K P2MM-NSM SM 1 AP_TO_BB_TIME_MARK OMIT
PP1625_K P2MM-NSM SM 1 GNSS_IF_TEST_OUT_K OMIT

DIGRF

PP1629_K P2MM-NSM SM 1 90_DIGRF_M1_TX_P_K OMIT
PP1630_K P2MM-NSM SM 1 90_DIGRF_M1_TX_N_K OMIT
PP1631_K P2MM-NSM SM 1 90_DIGRF_A1_RX1_P_K OMIT
PP1632_K P2MM-NSM SM 1 90_DIGRF_A1_RX1_N_K OMIT
PP1646_K P2MM-NSM SM 1 90_DIGRF_M0_TX_P_K OMIT
PP1647_K P2MM-NSM SM 1 90_DIGRF_M0_TX_N_K OMIT

BB UART

PP1643_K P2MM-NSM SM 1 UART_BB_TO_AP_RXD_K OMIT

PP1660_K P2MM-NSM SM 1 SWD_AOP_TO_MANY_SWCLK OMIT
PP1661_K P2MM-NSM SM 1 SWD_AOP_BI_BB_SWDIO OMIT

PCIE GND

PP1633_K P2MM-NSM SM 1 OMIT
PP1634_K P2MM-NSM SM 1 OMIT

SIM CARD CONNECTOR

J_SIM_K SIMCARD-BEACH-D22 F-RT-SM

Pin	Signal	Net
1	VCC	VDD_SIM1_K
2	RESET	SIM1_RST_R_K
3	CLK	SIM1_CLK_R_K
5	GND	
8	SIM_DETECT	SIM1_DETECT_R_K
7	IO	SIM1_IO_R_K
6	SWP	SIM1_SWP_R_K
9	SIM_DETECT_SPG	

C1601_K 2.2UF 20% 6.3V X5R-CERM 0201 SIM OMIT_TABLE
DZ1605_K 12V-33PF 01005-1 SIM
DZ1600_K 5.5V-6.2PF 0201 SIM
C1600_K 100PF 5% 10V NPO-C0G 01005 BASEBAND

DZ1606_K SG-WLL-Z-2 ESD202-B1-CSP01005
DZ1608_K SG-WLL-Z-2 ESD202-B1-CSP01005
DZ1607_K SG-WLL-Z-2 ESD202-B1-CSP01005
DZ1609_K SG-WLL-Z-2 ESD202-B1-CSP01005

R1613_K 10 5% 1/32W MF 01005 SIM1_IO_K — SIM1_IO_R_K
R1614_K 10 5% 1/32W MF 01005 SIM1_CLK_K — SIM1_CLK_R_K
R1615_K 10 5% 1/32W MF 01005 SIM1_RST_K — SIM1_RST_R_K
R1616_K 10 5% 1/32W MF 01005 NFC_SWP1 — SIM1_SWP_R_K
R1617_K 10 5% 1/32W MF 01005 SIM1_DETECT_K — SIM1_DETECT_R_K

HARDWARE ID

PP1V8_S2
R1611_K 1.00K 1% 1/32W MF 01005 BASEBAND OMIT — BB_HW_ID<0>_K
R1600_K 1.00K 1% 1/32W MF 01005 BASEBAND OMIT — BB_HW_ID<1>_K
R1602_K 1.00K 1% 1/32W MF 01005 BASEBAND — BB_HW_ID<2>_K
R1605_K 1.00K 1% 1/32W MF 01005 BASEBAND — BB_HW_ID<3>_K
R1612_K 1.00K 1% 1/32W MF 01005 BASEBAND
R1601_K 1.00K 1% 1/32W MF 01005 BASEBAND
R1603_K 1.00K 1% 1/32W MF 01005 BASEBAND OMIT
R1606_K 1.00K 1% 1/32W MF 01005 BASEBAND OMIT

HARDWARE	HW_ID<3:0>
ICE17.2 RF DEV1	0 0 0 Z
ICE17.2 RF DEV2	0 0 Z 0
RESERVED	0 0 Z Z
RESERVED	0 Z 0 0
RESERVED	0 Z 0 Z

HARDWARE	HW_ID<3:0>
ICE17.2 PROTO1	0 0 0 0
ICE17.2 PROTO2	0 0 0 1
ICE17.2 PROTO3	0 0 1 0
ICE17.2 EVT	0 0 1 1
RESERVED	0 1 0 0

DEV CONFIG

PP1V8_S2
R1608_K 1.00K 1% 1/32W MF 01005 BASEBAND NOSTUFF — DEV_HW_CONFIG_K
R1609_K 1.00K 1% 1/32W MF 01005 BASEBAND NOSTUFF

HW_CONFIG	DEV_HW_CONFIG
RESERVED	Z
RESERVED	0
RESERVED	1

BOOTCFG

PP1V8_S2
R1604_K 1.00K 1% 1/32W MF 01005 BASEBAND — HW_MON1_K
R1607_K 1.00K 1% 1/32W MF 01005 BASEBAND — HW_MON2_K

R1610_K 1.00K 1% 1/32W MF 01005 BASEBAND NOSTUFF — PCIE_AP_TO_BB_RESET_L
STUFF FOR VENDOR CONFIG ONLY

	HW_MON1	HW_MON2	TRIG_IN
NAND	0	0	1
FLASHLESS	1	0	1
FLASHLESS WDOG DIS	1	1	0
NAND	1	1	1

BOOTSTRAPS ARE INTERNALLY PULLED DOWN

DEBUG CONNECTOR

MLB 516S1185
FLEX 516S1184

J_DEBUG_K 20-5857-036-001-829 F-ST-SM

Pin	Signal	Pin	Signal
41		2	90_USB_BB_DATA_P
37	PP_VDD_MAIN	4	90_USB_BB_DATA_N
38		6	VDD_SIM1_K
1	PMU_TO_BB_USB_VBUS_DETECT	8	SIM1_RST_R_K
3	NC	10	SIM1_CLK_R_K
5	NC	12	SIM1_IO_R_K
7	PMU_TO_BBPMU_RESET_L	14	SIM1_SWP_R_K
9	PP1V8_S2	16	SIM1_DETECT_R_K
11	BB_JTAG_TDO_K	18	NC
13	BB_JTAG_TDI_K	20	NC
15	BB_JTAG_TRST_L_K	22	NC
17	AP_TO_BB_RESET_L	24	NC
19	BB_JTAG_TCK_K	26	NC
21	BB_JTAG_TMS_K	28	NC
23	PP_VDD_MAIN	30	NC
25	NC	32	UART_BB_TO_WLAN_COEX
27	UART_BB_TO_AP_RXD_K	34	UART_WLAN_TO_BB_COEX
29	UART_AP_TO_BB_TXD_K	36	NC
31	NC		
33			
35	NC		
39		40	
42			

SELECT
PP_VDD_BOOST
BB_JTAG_RESET_L
NOSTUFF

CONFIDENTIAL AND PROPRIETARY APPLE SYSTEM DESIGN. FOR REFERENCE PURPOSE ONLY - NOT A CHANGE REQUEST

PAGE TITLE: TEST POINTS & SIM

Apple Inc.

DRAWING NUMBER: 051-02247 SIZE: D
REVISION: 7.0.0
BRANCH: evt-1
PAGE: 16 OF 17
SHEET: 28 OF 34

NOTICE OF PROPRIETARY PROPERTY:
THE INFORMATION CONTAINED HEREIN IS THE PROPRIETARY PROPERTY OF APPLE INC.
THE POSESSOR AGREES TO THE FOLLOWING:
I TO MAINTAIN THIS DOCUMENT IN CONFIDENCE
II NOT TO REPRODUCE OR COPY IT
III NOT TO REVEAL OR PUBLISH IT IN WHOLE OR PART
IV ALL RIGHTS RESERVED

RF CONNECTORS AND METROCIRC

LAT MLC

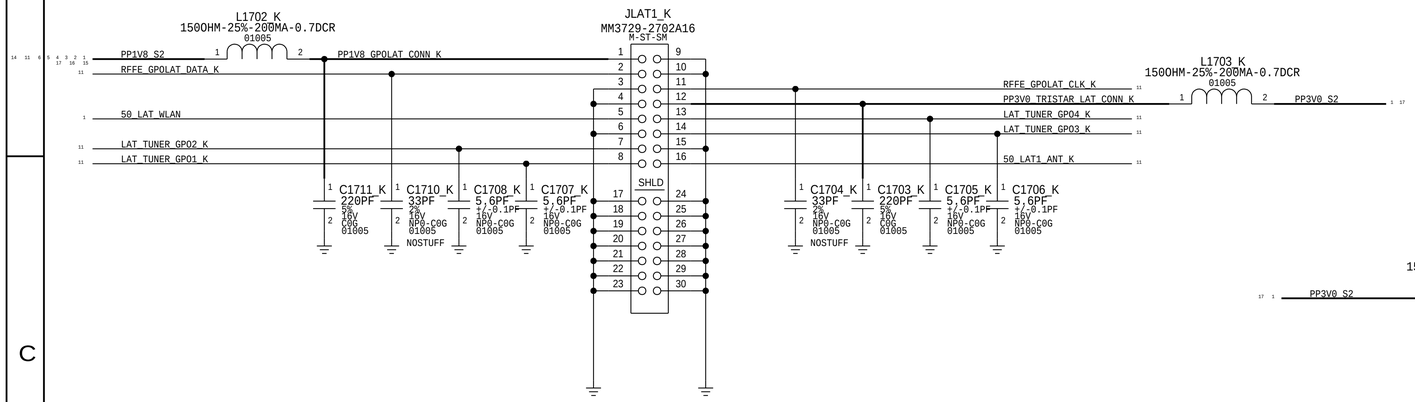

UAT1 MLC

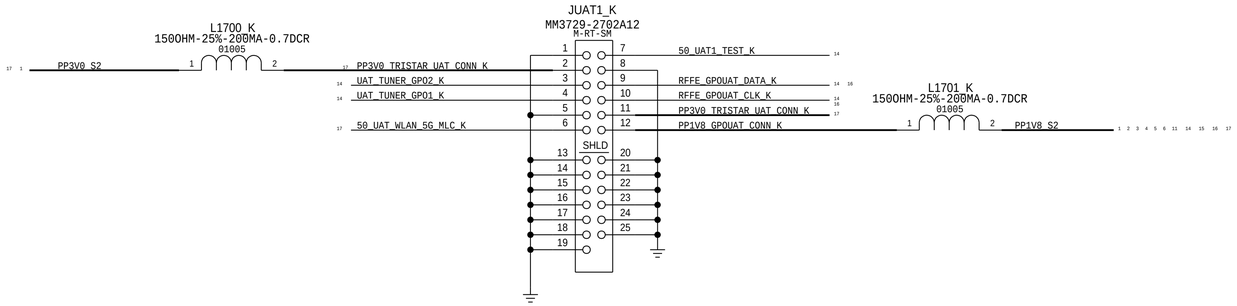

4-IN-1 METROCIRC CABLE

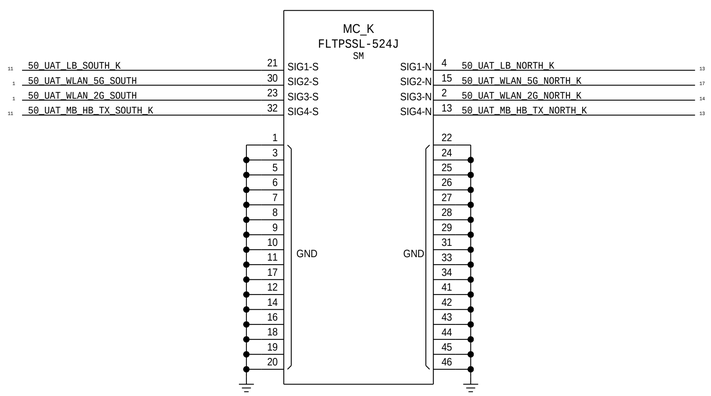

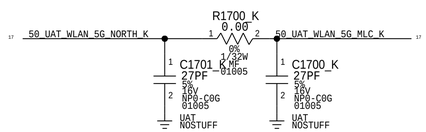

1. ALL RESISTANCE VALUES ARE IN OHMS, 0.1 WATT +/- 5%.
2. ALL CAPACITANCE VALUES ARE IN MICROFARADS.
3. ALL CRYSTALS & OSCILLATOR VALUES ARE IN HERTZ.

REV	ECN	DESCRIPTION OF REVISION	CK APPD / DATE
7	0008448938	ENGINEERING RELEASED	2017-04-11

D22/D221 WIFI_MLB (GUINNESS)
APR 03, 2017

PDF PAGE	CSA PAGE	CONTENTS
2	76	GUINNESS
3	77	WIFI FRONT-END

POWER

31 12 IN PP_VDD_MAIN
31 12 IN PP1V8_S2

CLOCKS

31 12 IN PMU_TO_WLAN_CLK32K
31 12 IN WLAN_TO_AP_TIME_SYNC

CONTROL

31 12 IN PMU_TO_WLAN_REG_ON
31 12 IN PMU_TO_BT_REG_ON
31 12 OUT BT_TO_PMU_HOST_WAKE
31 12 IN AP_TO_BT_WAKE

WLAN PCIE

31 12 IN 90_PCIE_AP_TO_WLAN_REFCLK_P
31 12 IN 90_PCIE_AP_TO_WLAN_REFCLK_N
31 12 IN 90_PCIE_AP_TO_WLAN_TXD_P
31 12 IN 90_PCIE_AP_TO_WLAN_TXD_N
31 12 OUT 90_PCIE_WLAN_TO_AP_RXD_P
31 12 OUT 90_PCIE_WLAN_TO_AP_RXD_N
31 12 IN PCIE_AP_TO_WLAN_RESET_L
2 IO PCIE_WLAN_BI_AP_CLKREQ_L
31 12 OUT WLAN_TO_PMU_HOST_WAKE
31 12 IN AP_TO_WLAN_DEVICE_WAKE

WLAN UART

31 12 OUT UART_WLAN_TO_AP_RXD
31 12 IN UART_AP_TO_WLAN_TXD
31 12 OUT UART_WLAN_TO_AP_CTS_L
31 12 IN UART_AP_TO_WLAN_RTS_L

BLUETOOTH UART

31 12 IN UART_AP_TO_BT_TXD
31 12 OUT UART_BT_TO_AP_RXD
31 12 IN UART_AP_TO_BT_RTS_L
31 12 OUT UART_BT_TO_AP_CTS_L

AOP

31 12 IN AOP_TO_WLAN_CONTEXT_A
31 12 IN AOP_TO_WLAN_CONTEXT_B

COEX

31 12 IN UART_BB_TO_WLAN_COEX
31 12 OUT UART_WLAN_TO_BB_COEX

ANTENNA

3 IO 50_UAT_WLAN_2G_SOUTH
3 IO 50_UAT_WLAN_5G_SOUTH
3 IO 50_LAT_WLAN

SymbolPorts

DRAWING TITLE: SCH,MLB,BOT,X893

Apple Inc.

DRAWING NUMBER: 051-02247 SIZE: D
REVISION: 7.0.0
BRANCH: evt-1
PAGE: 1 OF 5
SHEET: 30 OF 34

NOTICE OF PROPRIETARY PROPERTY:
THE INFORMATION CONTAINED HEREIN IS THE PROPRIETARY PROPERTY OF APPLE INC.
THE POSESSOR AGREES TO THE FOLLOWING:
I TO MAINTAIN THIS DOCUMENT IN CONFIDENCE
II NOT TO REPRODUCE OR COPY IT
III NOT TO REVEAL OR PUBLISH IT IN WHOLE OR PART
IV ALL RIGHTS RESERVED

CONFIDENTIAL AND PROPRIETARY APPLE SYSTEM DESIGN. FOR REFERENCE PURPOSE ONLY - NOT A CHANGE REQUEST

WIFI/BT

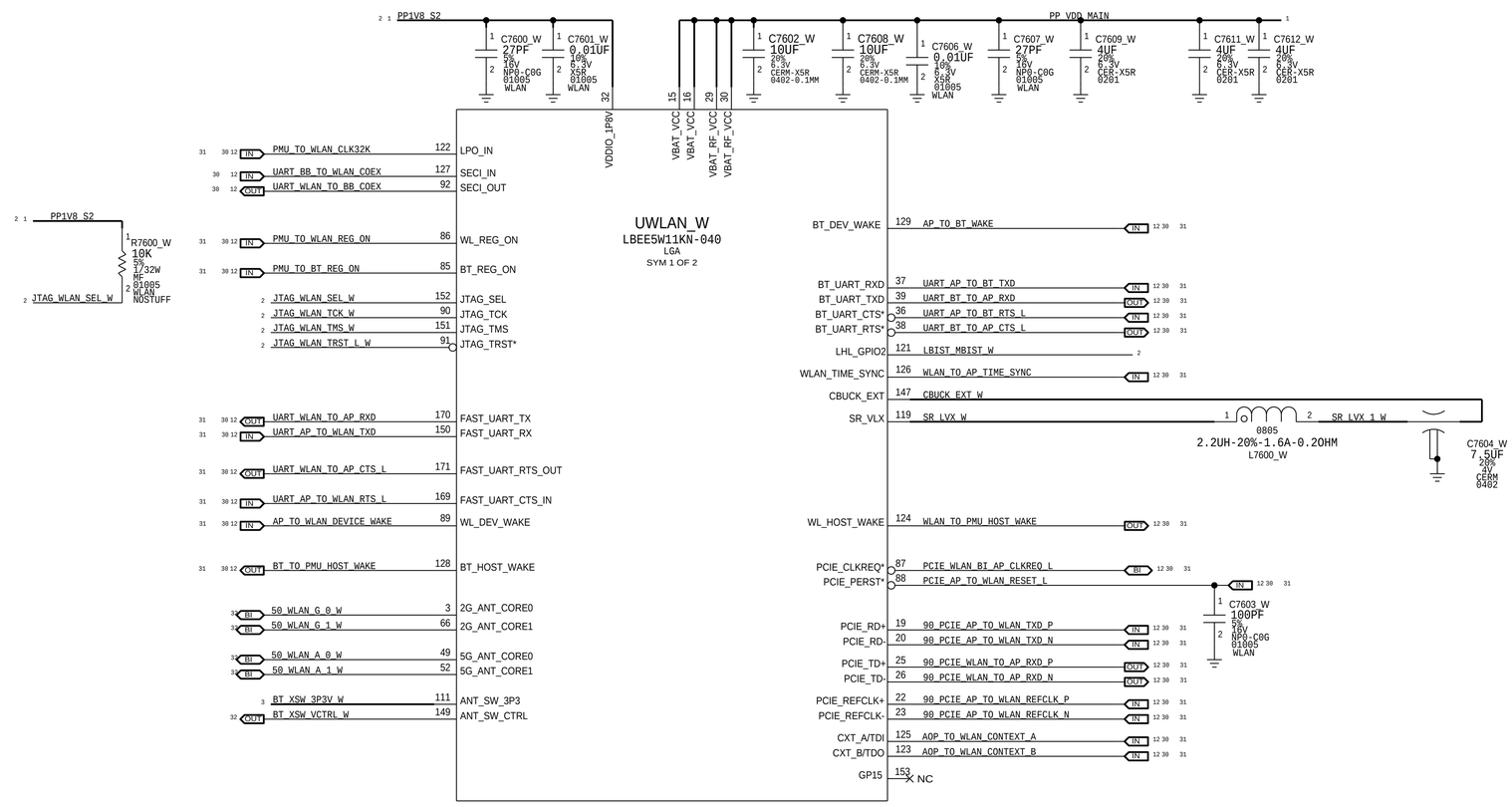

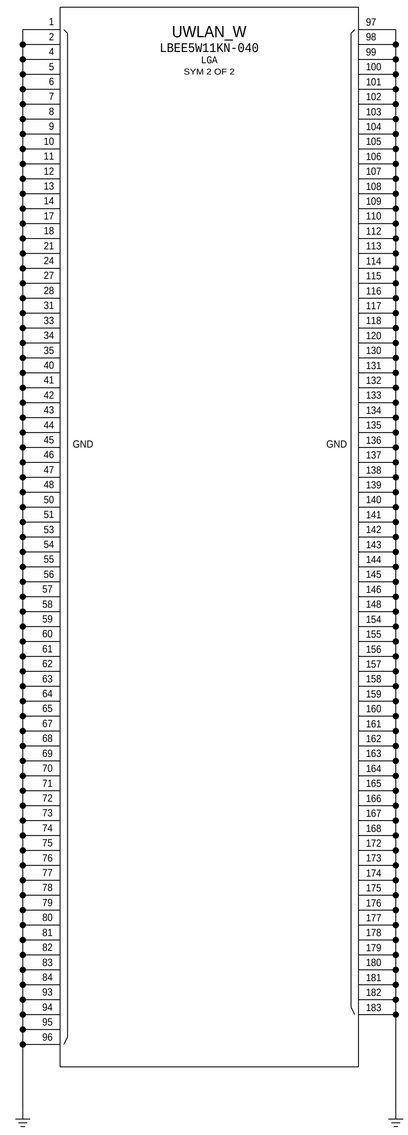

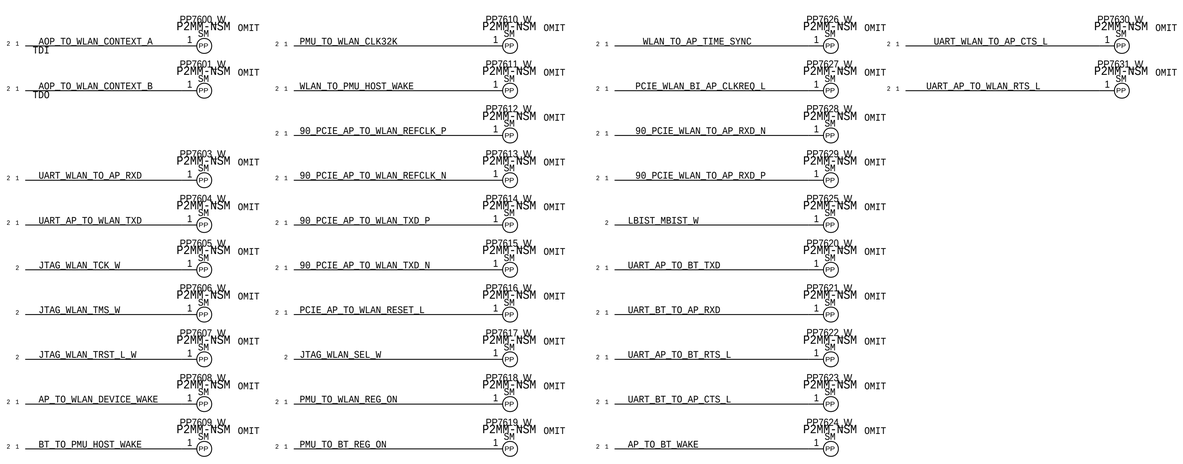

PART NUMBER	ALTERNATE FOR PART NUMBER	BOM OPTION	REF DES	COMMENTS:
998-10376	998-10147	BOM_TABLE_ALTS	UWLAN_W	USI ES6.1 WIFI MODULE

SYNC_MASTER=WIFI SYNC_DATE=01/30/2014

PAGE TITLE: Guinness

Apple Inc.

DRAWING NUMBER: 051-02247 SIZE: D

REVISION: 7.0.0

BRANCH: evt-1

PAGE: 4 OF 5

SHEET: 31 OF 34

NOTICE OF PROPRIETARY PROPERTY:

THE INFORMATION CONTAINED HEREIN IS THE PROPRIETARY PROPERTY OF APPLE INC. THE POSESSOR AGREES TO THE FOLLOWING:

I TO MAINTAIN THIS DOCUMENT IN CONFIDENCE

II NOT TO REPRODUCE OR COPY IT

III NOT TO REVEAL OR PUBLISH IT IN WHOLE OR PART

IV ALL RIGHTS RESERVED

WIFI LOWER ANTENNA FEED

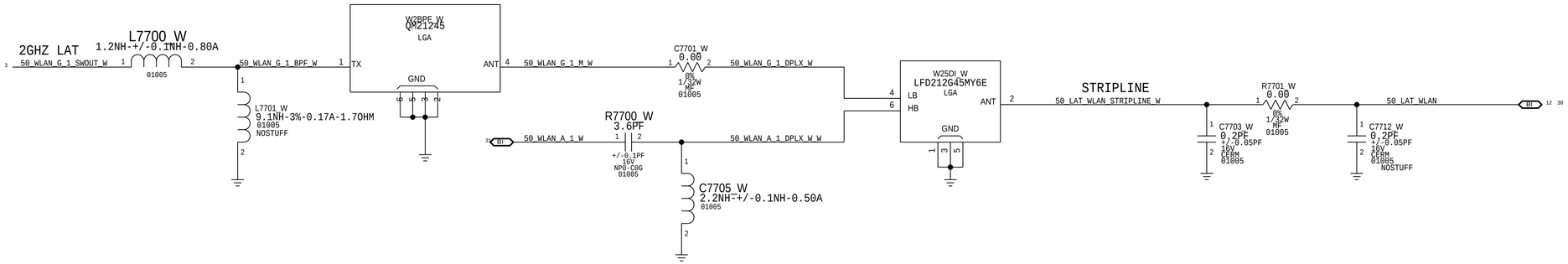

5GHZ WIFI UPPER ANTENNA FEED

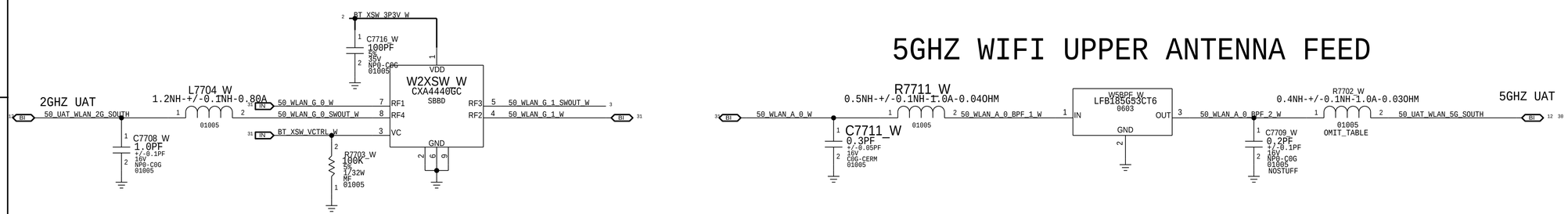

PART#	QTY	DESCRIPTION	REFERENCE DESIGNATOR(S)	CRITICAL	BOM OPTION
117S0161	1	5GHZ C0 BPF OUTPUT MATCH	R7702_W	CRITICAL	D221
152S00498	1	5GHZ C0 BPF OUTPUT MATCH	R7702_W	CRITICAL	ROW
152S00498	1	5GHZ C0 BPF OUTPUT MATCH	R7702_W	CRITICAL	JPN

PAGE TITLE
WiFiANTFeeds

Apple Inc.

DRAWING NUMBER 051-02247
SIZE D
REVISION 7.0.0
BRANCH evt-1
PAGE 5 OF 5
SHEET 32 OF 34

NOTICE OF PROPRIETARY PROPERTY:
THE INFORMATION CONTAINED HEREIN IS THE PROPRIETARY PROPERTY OF APPLE INC.
THE POSESSOR AGREES TO THE FOLLOWING:
I TO MAINTAIN THIS DOCUMENT IN CONFIDENCE
II NOT TO REPRODUCE OR COPY IT
III NOT TO REVEAL OR PUBLISH IT IN WHOLE OR PART
IV ALL RIGHTS RESERVED

1. ALL RESISTANCE VALUES ARE IN OHMS, 0.1 WATT +/- 5%.
2. ALL CAPACITANCE VALUES ARE IN MICROFARADS.
3. ALL CRYSTALS & OSCILLATOR VALUES ARE IN HERTZ.

REV	ECN	DESCRIPTION OF REVISION	CK APPD / DATE
7	0008448938	ENGINEERING RELEASED	2017-04-11

D22 NFC_MLB
MARCH 22, 2017

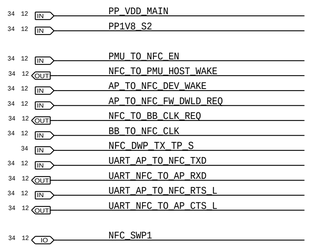

PART#	QTY	DESCRIPTION	REFERENCE DESIGNATOR(S)	CRITICAL	BOM OPTION
138S00159	3	CAP,SOFT-TERM,2.2UF,6.3V,0201	C7500_S,C7502_S,C7505_S	CRITICAL	SOFT_CAP
138S0831	3	CAP,TYPICAL,2.2UF,6.3V,0201	C7500_S,C7502_S,C7505_S	CRITICAL	TYPICAL_CAP

page1

DRAWING TITLE
SCH,MLB,BOT,X893

Apple Inc.

DRAWING NUMBER 051-02247
SIZE D
REVISION 7.0.0
BRANCH evt-1
PAGE 1 OF 75
SHEET 33 OF 34

NOTICE OF PROPRIETARY PROPERTY:
THE INFORMATION CONTAINED HEREIN IS THE PROPRIETARY PROPERTY OF APPLE INC.
THE POSESSOR AGREES TO THE FOLLOWING:
I TO MAINTAIN THIS DOCUMENT IN CONFIDENCE
II NOT TO REPRODUCE OR COPY IT
III NOT TO REVEAL OR PUBLISH IT IN WHOLE OR PART
IV ALL RIGHTS RESERVED

STOCKHOLM

NFC CONTROLLER

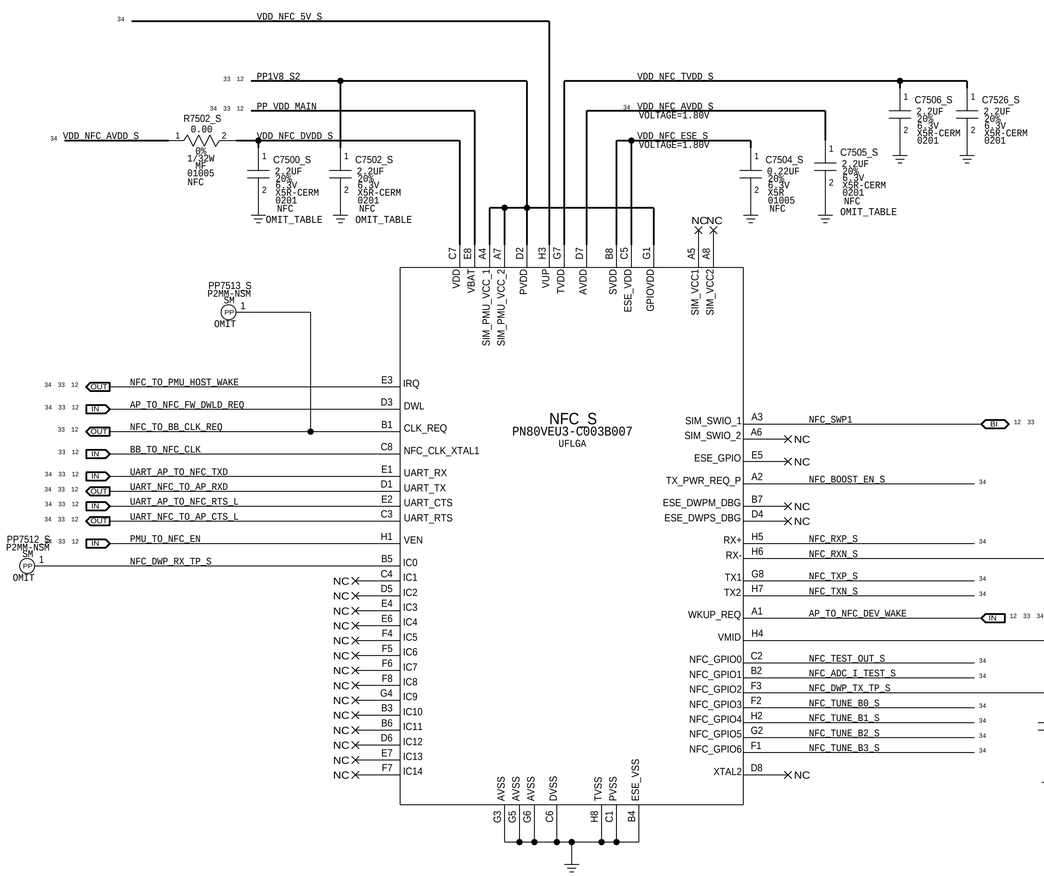

5V BOOSTER

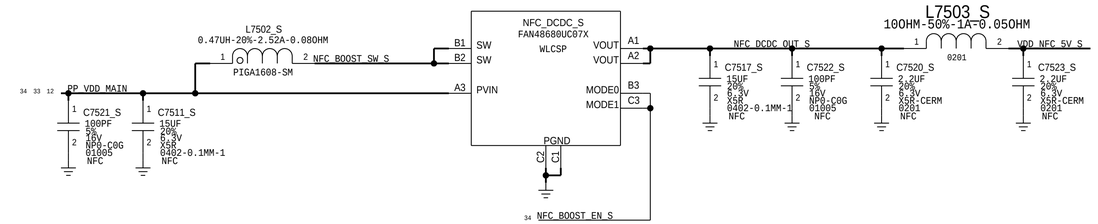

NFC FRONT END

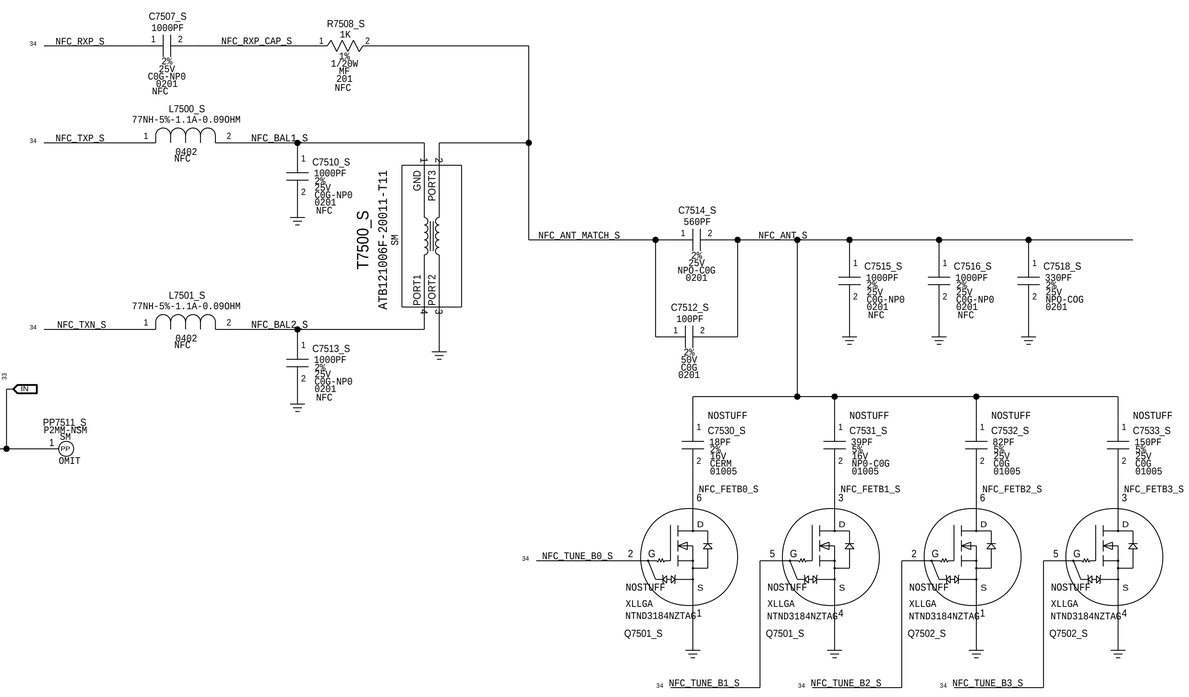

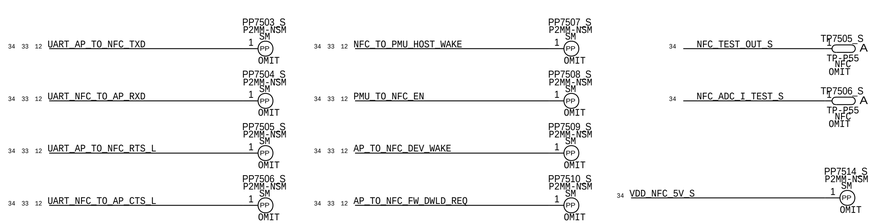

PAGE TITLE: NFC

Apple Inc.

DRAWING NUMBER: 051-02247 SIZE: D

REVISION: 7.0.0

BRANCH: evt-1

PAGE: 75 OF 75

SHEET: 34 OF 34

NOTICE OF PROPRIETARY PROPERTY:

THE INFORMATION CONTAINED HEREIN IS THE PROPRIETARY PROPERTY OF APPLE INC. THE POSESSOR AGREES TO THE FOLLOWING:

I TO MAINTAIN THIS DOCUMENT IN CONFIDENCE

II NOT TO REPRODUCE OR COPY IT

III NOT TO REVEAL OR PUBLISH IT IN WHOLE OR PART

IV ALL RIGHTS RESERVED