MCP3422/3/4

18-Bit, Multi-Channel ΔΣ Analog-to-Digital Converter with I²C™ Interface and On-Board Reference

Features

- 18-bit ΔΣ ADC with Differential Inputs:
  - 2 channels: MCP3422 and MCP3423
  - 4 channels: MCP3424
- Differential Input Full Scale Range: $-V_{REF}$ to $+V_{REF}$
- Self Calibration of Internal Offset and Gain per Each Conversion
- On-Board Voltage Reference (V_{REF}):
  - Accuracy: 2.048V ± 0.05%
  - Drift: 15 ppm/°C
- On-Board Programmable Gain Amplifier (PGA):
  - Gains of 1, 2, 4 or 8
- INL: 10 ppm of Full Scale Range
- Programmable Data Rate Options:
  - 3.75 SPS (18 bits)
  - 15 SPS (16 bits)
  - 60 SPS (14 bits)
  - 240 SPS (12 bits)
- One-Shot or Continuous Conversion Options
- Low Current Consumption:
  - 135 µA typical (V_{DD}= 3V, Continuous Conversion)
  - 36 µA typical (V_{DD}= 3V, One-Shot Conversion with 1 SPS)
- On-Board Oscillator
- I²C™ Interface:
  - Standard, Fast and High Speed Modes
  - User configurable two external address pins for MCP3423 and MCP3424
- Single Supply Operation: 2.7V to 5.5V
- Extended Temperature Range: -40°C to +125°C

Typical Applications

- Portable Instrumentation and Consumer Goods
- Temperature Sensing with RTD, Thermistor, and Thermocouple
- Bridge Sensing for Pressure, Strain, and Force
- Weigh Scales
- Battery Fuel Gauges
- Factory Automation Equipment

Description

The MCP3422, MCP3423 and MCP3424 devices (MCP3422/3/4) are the low noise and high accuracy 18-Bit delta-sigma analog-to-digital (ΔΣ A/D) converter family members of the MCP342X series from Microchip Technology Inc. These devices can convert analog inputs to digital codes with up to 18 bits of resolution.

The on-board 2.048V reference voltage enables an input range of ±2.048V differentially (full scale range = 4.096V/PGA).

These devices can output analog-to-digital conversion results at rates of 3.75, 15, 60, or 240 samples per second depending on the user controllable configuration bit settings using the two-wire I²C serial interface. During each conversion, the device calibrates offset and gain errors automatically. This provides accurate conversion results from conversion to conversion over variations in temperature and power supply fluctuation.

The user can select the PGA gain of x1, x2, x4, or x8 before the analog-to-digital conversion takes place. This allows the MCP3422/3/4 devices to convert a very weak input signal with high resolution.

The MCP3422/3/4 devices have two conversion modes: (a) One-Shot Conversion mode and (b) Continuous Conversion mode. In One-Shot conversion mode, the device performs a single conversion and enters a low current standby mode automatically until it receives another conversion command. This reduces current consumption greatly during idle periods. In Continuous conversion mode, the conversion takes place continuously at the set conversion speed. The device updates its output buffer with the most recent conversion data.

The devices operate from a single 2.7V to 5.5V power supply and have a two-wire I²C compatible serial interface for a standard (100 kHz), fast (400 kHz), or high-speed (3.4 MHz) mode.

The I²C address bits for the MCP3423 and MCP3424 are selected by using two external I²C address selection pins (Adr0 and Adr1). The user can configure the device to one of eight available addresses by connecting these two address selection pins to V_{DD}, V_{SS} or float. The I²C address bits of the MCP3422 are programmed at the factory during production.

© 2009 Microchip Technology Inc.

The MCP3422 and MCP3423 devices have two differential input channels and the MCP3424 has four-differential input channels. All electrical properties of these three devices are the same except the differences in the number of input channels and I^2C address bit selection options.

The MCP3422 is available in 8-pin SOIC, DFN, and MSOP packages. The MCP3423 is available in 10-pin DFN, and MSOP packages. The MCP3424 is available in 14-pin SOIC and TSSOP packages.

Package Types

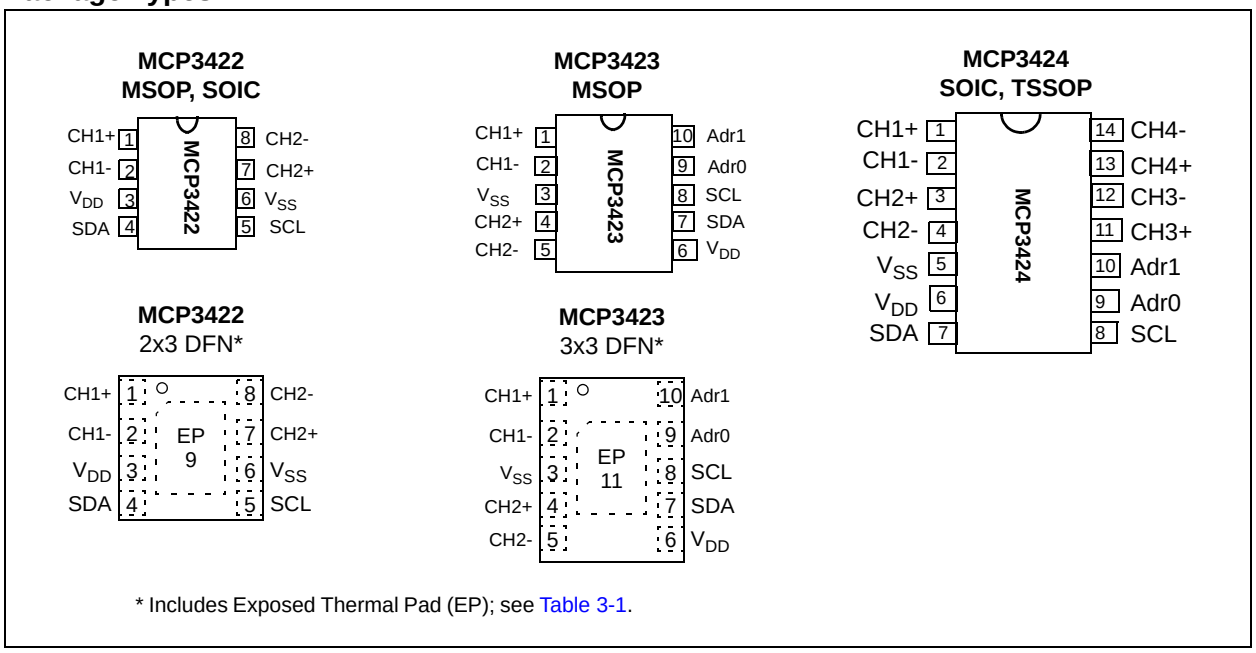

* Includes Exposed Thermal Pad (EP); see Table 3-1.

Functional Block Diagram

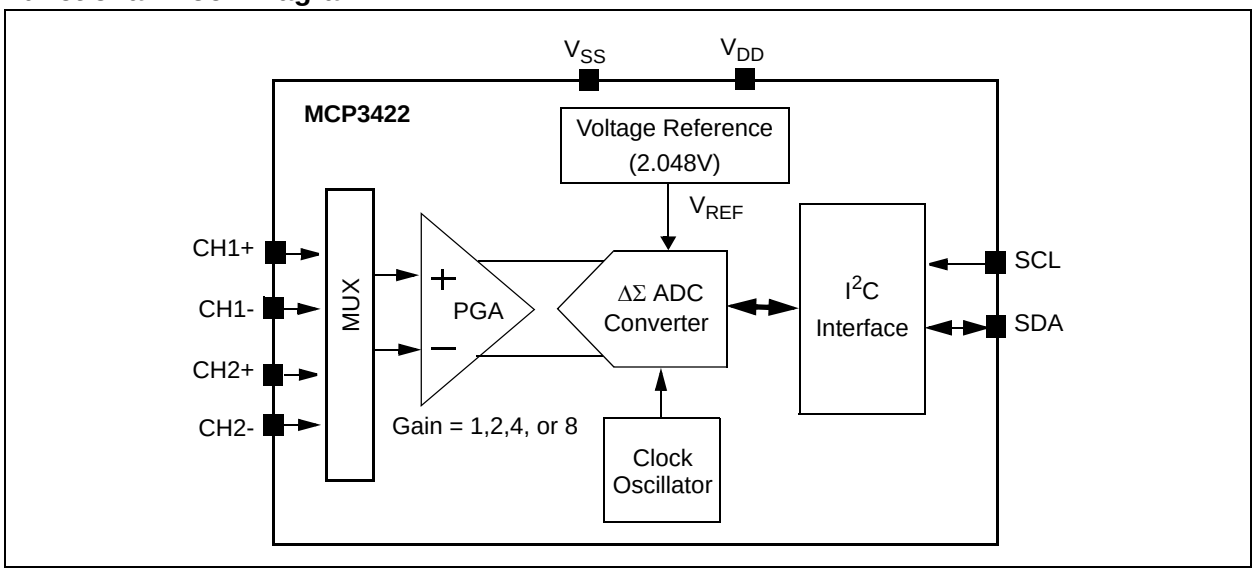

© 2009 Microchip Technology Inc.

Functional Block Diagram

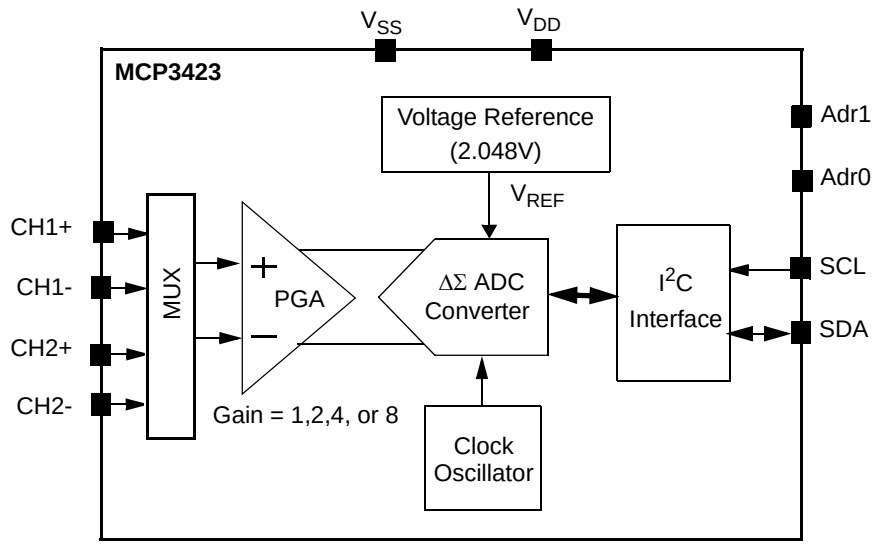

Functional Block Diagram

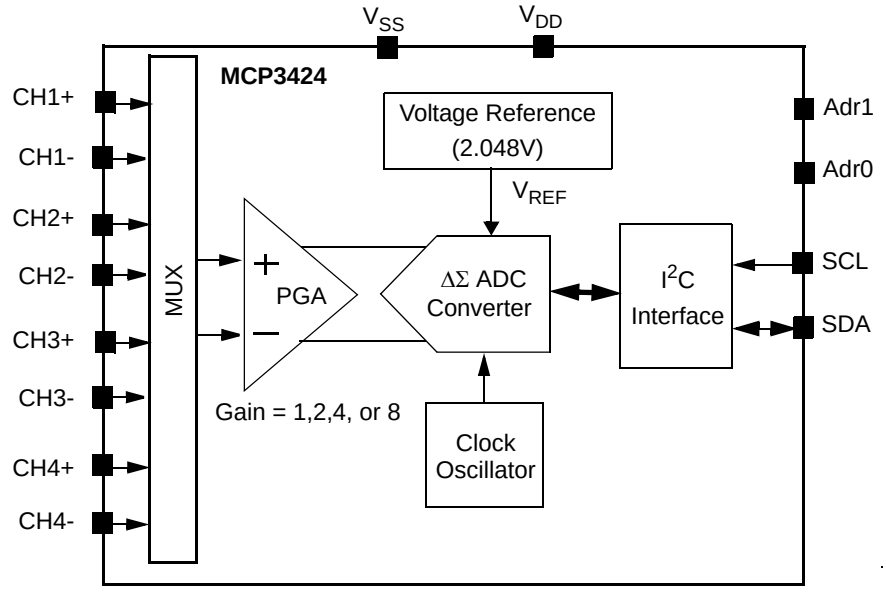

NOTES:

© 2009 Microchip Technology Inc.

1.0 ELECTRICAL CHARACTERISTICS

Absolute Maximum Ratings†

V_{DD}.....7.0V
All inputs and outputs ....V_{SS} –0.4V to V_{DD}+0.4V
Differential Input Voltage ..... $|V_{DD} - V_{SS}|$
Output Short Circuit Current .....Continuous
Current at Input Pins .....±2 mA
Current at Output and Supply Pins .....±10 mA
Storage Temperature .....-65°C to +150°C
Ambient Temp. with power applied .....-55°C to +125°C
ESD protection on all pins ..... ≥ 6 kV HBM, ≥ 400V MM
Maximum Junction Temperature (T_J). .....+150°C

†Notice: Stresses above those listed under “Maximum Ratings” may cause permanent damage to the device. This is a stress rating only and functional operation of the device at those or any other conditions above those indicated in the operational listings of this specification is not implied. Exposure to maximum rating conditions for extended periods may affect device reliability.

ELECTRICAL CHARACTERISTICS

Electrical Specifications: Unless otherwise specified, all parameters apply for T_A = -40°C to +85°C, V_{DD} = +5.0V, V_{SS} = 0V, CHn+ = CHn- = V_{REF}/2, V_{INCOM} = V_{REF} /2. All ppm units use 2*V_{REF} as differential full scale range.

Parameters	Sym	Min	Typ	Max	Units	Conditions
Analog Inputs						
Differential Full Scale Input Voltage Range	FSR	—	±2.048/PGA	—	V	V_{IN} = [CHn+ - CHn-]
Maximum Input Voltage Range		V_{SS}-0.3	—	V_{DD}+0.3	V	**(Note 1)**
Differential Input Impedance	Z_{IND} (f)	—	2.25/PGA	—	MΩ	During normal mode operation **(Note 2)**
Common Mode input Impedance	Z_{INC} (f)	—	25	—	MΩ	PGA = 1, 2, 4, 8
System Performance						
Resolution and No Missing Codes (Effective Number of Bits) **(Note 3)**		12	—	—	Bits	DR = 240 SPS
		14	—	—	Bits	DR = 60 SPS
		16	—	—	Bits	DR = 15 SPS
		18	—	—	Bits	DR = 3.75 SPS
Data Rate **(Note 4)**	DR	176	240	328	SPS	12 bits mode
		44	60	82	SPS	14 bits mode
		11	15	20.5	SPS	16 bits mode
		2.75	3.75	5.1	SPS	18 bits mode
Output Noise		—	1.5	—	μV_{RMS}	T_A = +25°C, DR = 3.75 SPS, PGA = 1, V_{IN}+ = V_{IN}- = GND
Integral Non-Linearity	INL	—	10	35	ppm of FSR	DR = 3.75 SPS, FSR = Full Scale Range **(Note 5)**
Internal Reference Voltage	V_{REF}	—	2.048	—	V	
Gain Error **(Note 6)**		—	0.05	0.35	%	PGA = 1, DR = 3.75 SPS

Note 1: Any input voltage below or greater than this voltage causes leakage current through the ESD diodes at the input pins. This parameter is ensured by characterization and not 100% tested.
2: This input impedance is due to 3.2 pF internal input sampling capacitor.
3: This parameter is ensured by design and not 100% tested.
4: The total conversion speed includes auto-calibration of offset and gain.
5: INL is the difference between the endpoints line and the measured code at the center of the quantization band.
6: Includes all errors from on-board PGA and V_{REF}.
7: This parameter is ensured by characterization and not 100% tested.
8: MCP3423 and MCP3424 only.
9: Addr_Float voltage is applied at address pin.
10: No voltage is applied at address pin (left “floating”).

ELECTRICAL CHARACTERISTICS (CONTINUED)

Electrical Specifications: Unless otherwise specified, all parameters apply for T_A = -40°C to +85°C, V_{DD} = +5.0V, V_{SS} = 0V, CHn+ = CHn- = V_{REF}/2, V_{INCOM} = V_{REF} /2. All ppm units use 2*V_{REF} as differential full scale range.

Parameters	Sym	Min	Typ	Max	Units	Conditions
PGA Gain Error Match **(Note 6)**		—	0.1	—	%	Between any 2 PGA settings
Gain Error Drift (**Note 6**)		—	15	—	ppm/°C	PGA=1, DR=3.75 SPS
Offset Error	V_{OS}	—	15	55	µV	Tested at PGA = 1 DR = 3.75 SPS
Offset Drift vs. Temperature		—	50	—	nV/°C	
Common-Mode Rejection		—	105	—	dB	at DC and PGA =1,
		—	110	—	dB	at DC and PGA =8, T_A = +25°C
Gain vs. V_{DD}		—	5	—	ppm/V	T_A = +25°C, V_{DD} = 2.7V to 5.5V, PGA = 1
Power Supply Rejection at DC Input		—	100	—	dB	T_A = +25°C, V_{DD} = 2.7V to 5.5V, PGA = 1
Power Requirements						
Voltage Range	V_{DD}	2.7	—	5.5	V	
Supply Current during Conversion	I_{DDA}	—	145	180	µA	V_{DD} = 5.0V
		—	135	—	µA	V_{DD} = 3.0V
Supply Current during Standby Mode	I_{DDS}	—	0.3	1	µA	V_{DD} = 5.0V
I^2C Digital Inputs and Digital Outputs						
High level input voltage	V_{IH}	0.7V_{DD}	—	V_{DD}	V	at SDA and SCL pins
Low level input voltage	V_{IL}	—	—	0.3V_{DD}	V	at SDA and SCL pins
Low level output voltage	V_{OL}	—	—	0.4	V	I_{OL} = 3 mA
Hysteresis of Schmidt Trigger for inputs **(Note 7)**	V_{HYST}	0.05V_{DD}	—	—	V	f_{SCL} = 100 kHz
Supply Current when I^2C bus line is active	I_{DDB}	—	—	10	µA	Device is in standby mode while I^2C bus is active
Input Leakage Current	I_{ILH}	—	—	1	µA	V_{IH} = 5.5V
	I_{ILL}	-1	—	—	µA	V_{IL} = GND
Logic Status of I^2C Address Pins (Note 8)						
Adr0 and Adr1 Pins	Addr_Low	V_{SS}	—	0.2V_{DD}	V	The device reads logic low.
Adr0 and Adr1 Pins	Addr_High	0.75V_{DD}	—	V_{DD}	V	The device reads logic high.
Adr0 and Adr1 Pins	Addr_Float	0.35V_{DD}	—	0.6V_{DD}	V	Read pin voltage if voltage is applied to the address pin. **(Note 9)**
		—	V_{DD}/2	—		Device outputs float output voltage (V_{DD}/2) on the address pin, if left “floating”. **(Note 10)**
Pin Capacitance and I^2C Bus Capacitance						
Pin capacitance	C_{PIN}	—	4	10	pF	
I^2C Bus Capacitance	C_b	—	—	400	pF	

Note 1: Any input voltage below or greater than this voltage causes leakage current through the ESD diodes at the input pins. This parameter is ensured by characterization and not 100% tested.
2: This input impedance is due to 3.2 pF internal input sampling capacitor.
3: This parameter is ensured by design and not 100% tested.
4: The total conversion speed includes auto-calibration of offset and gain.
5: INL is the difference between the endpoints line and the measured code at the center of the quantization band.
6: Includes all errors from on-board PGA and V_{REF}.
7: This parameter is ensured by characterization and not 100% tested.
8: MCP3423 and MCP3424 only.
9: Addr_Float voltage is applied at address pin.
10: No voltage is applied at address pin (left “floating”).

© 2009 Microchip Technology Inc.

TEMPERATURE CHARACTERISTICS

Electrical Specifications: Unless otherwise indicated, T_A = -40°C to +125°C, V_{DD} = +5.0V, V_{SS} = 0V.						
Parameters	**Sym**	**Min**	**Typ**	**Max**	**Units**	**Conditions**
Temperature Ranges						
Specified Temperature Range	T_A	-40	—	+85	°C	
Operating Temperature Range	T_A	-40	—	+125	°C	
Storage Temperature Range	T_A	-65	—	+150	°C	
Thermal Package Resistances						
Thermal Resistance, 8L-DFN (2x3)	θ_{JA}	—	68	—	°C/W	
Thermal Resistance, 8L-MSOP	θ_{JA}	—	211	—	°C/W	
Thermal Resistance, 8L-SOIC	θ_{JA}	—	149.5	—	°C/W	
Thermal Resistance, 10L-DFN (3x3)	θ_{JA}	—	53.3	—	°C/W	
Thermal Resistance, 10L-MSOP	θ_{JA}	—	202	—	°C/W	
Thermal Resistance, 14L-SOIC	θ_{JA}	—	95.3	—	°C/W	
Thermal Resistance, 14L-TSSOP	θ_{JA}	—	100	—	°C/W	

© 2009 Microchip Technology Inc.

NOTES:

© 2009 Microchip Technology Inc.

2.0 TYPICAL PERFORMANCE CURVES

Note:	The graphs and tables provided following this note are a statistical summary based on a limited number of samples and are provided for informational purposes only. The performance characteristics listed herein are not tested or guaranteed. In some graphs or tables, the data presented may be outside the specified operating range (e.g., outside specified power supply range) and therefore outside the warranted range.

Note: Unless otherwise indicated, T_A = -40°C to +85°C, V_{DD} = +5.0V, V_{SS} = 0V, CHn+ = CHn- = V_{REF}/2, V_{INCOM} = V_{REF}/2.

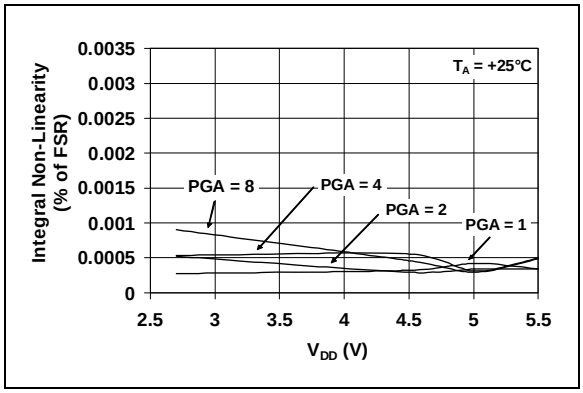

FIGURE 2-1: *INL vs. Supply Voltage (V_{DD}).*

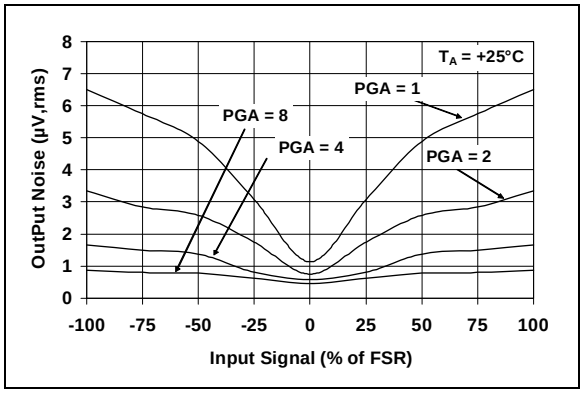

FIGURE 2-4: *Output Noise vs. Input Voltage.*

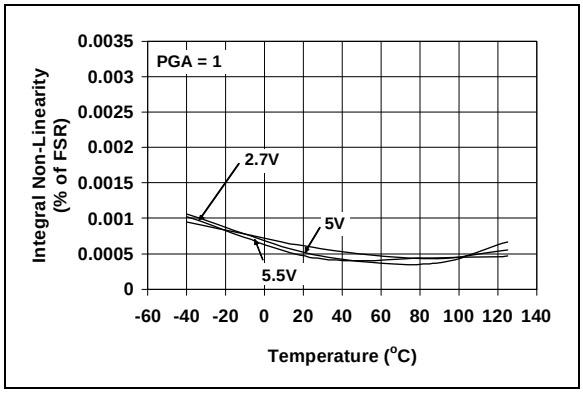

FIGURE 2-2: *INL vs. Temperature.*

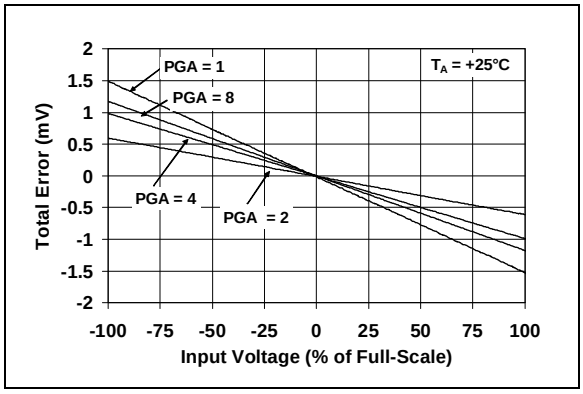

FIGURE 2-5: *Total Error vs. Input Voltage.*

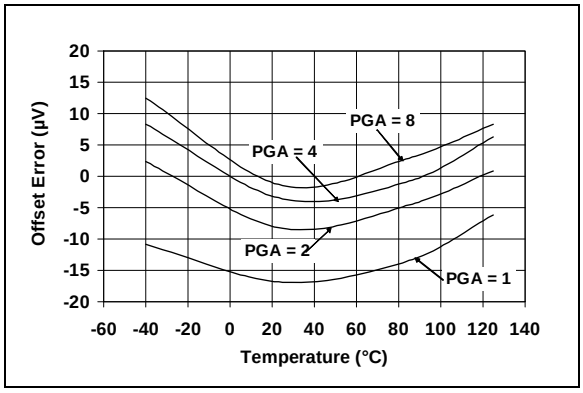

FIGURE 2-3: *Offset Error vs. Temperature.*

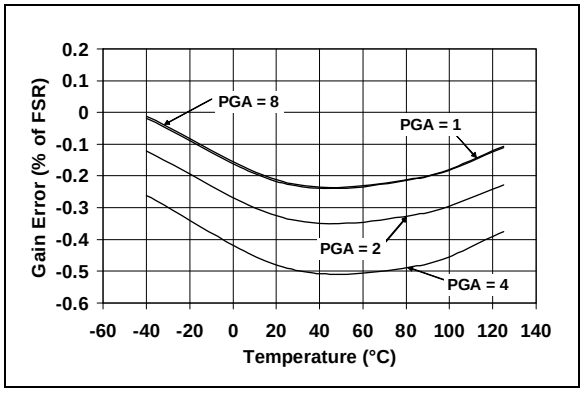

FIGURE 2-6: *Gain Error vs. Temperature.*

Note: Unless otherwise indicated, T_A = -40°C to +85°C, V_{DD} = +5.0V, V_{SS} = 0V, CHn+ = CHn- = $V_{REF}/2$, $V_{INCOM} = V_{REF}/2$.

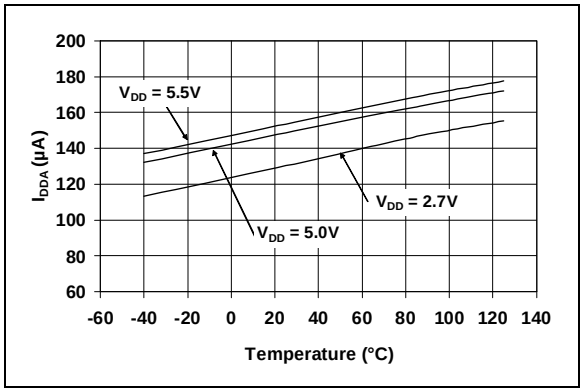

FIGURE 2-7: *I_{DDA} vs. Temperature.*

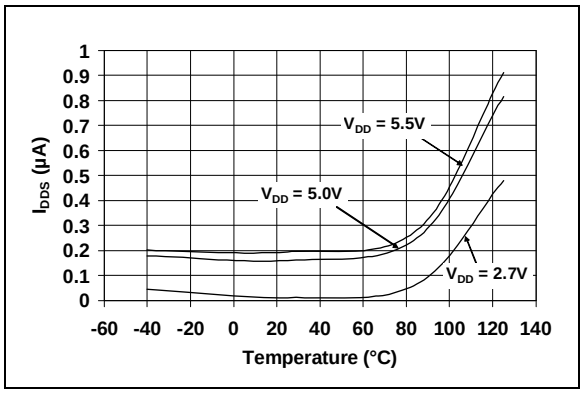

FIGURE 2-8: *I_{DDS} vs. Temperature.*

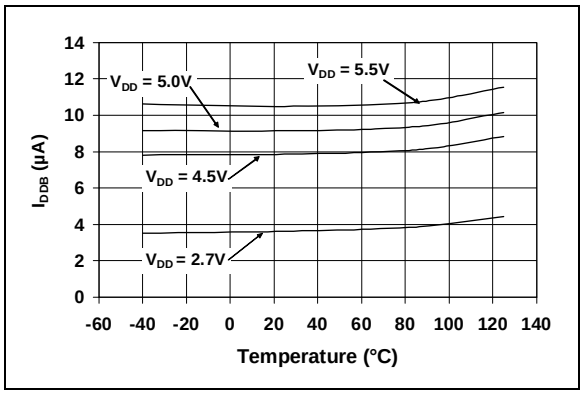

FIGURE 2-9: *I_{DDB} vs. Temperature.*

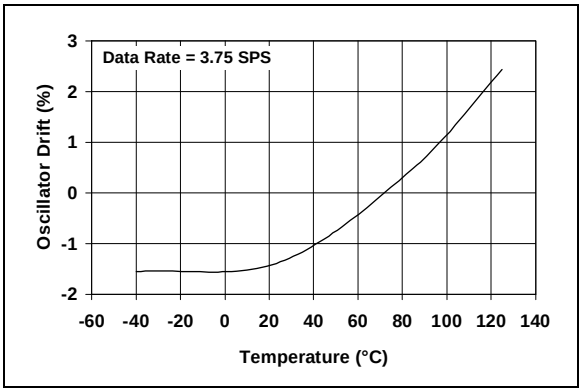

FIGURE 2-10: *Oscillator Drift vs. Temperature.*

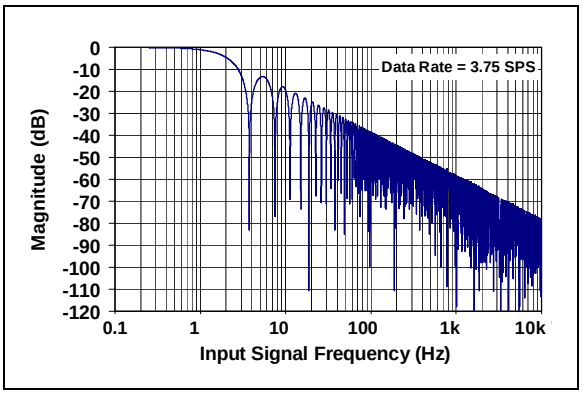

FIGURE 2-11: *Frequency Response.*

© 2009 Microchip Technology Inc.

3.0 PIN DESCRIPTIONS

The descriptions of the pins are listed in Table 3-1.

TABLE 3-1: PIN FUNCTION TABLE

MCP3422		MCP3423		MCP3424	Sym	Description
DFN	MSOP, SOIC	DFN	MSOP	SOIC, TSSOP		
1	1	1	1	1	CH1+	Positive Differential Analog Input Pin of Channel 1
2	2	2	2	2	CH1-	Negative Differential Analog Input Pin of Channel 1
7	7	4	4	3	CH2+	Positive Differential Analog Input Pin of Channel 2
8	8	5	5	4	CH2-	Negative Differential Analog Input Pin of Channel 2
6	6	3	3	5	V_{SS}	Ground Pin
3	3	6	6	6	V_{DD}	Positive Supply Voltage Pin
4	4	7	7	7	SDA	Bidirectional Serial Data Pin of the I^2C Interface
5	5	8	8	8	SCL	Serial Clock Pin of the I^2C Interface
—	—	9	9	9	Adr0	I^2C Address Selection Pin. See **Section 5.3.2.**
—	—	10	10	10	Adr1	I^2C Address Selection Pin. See **Section 5.3.2.**
—	—	—	—	11	CH3+	Positive Differential Analog Input Pin of Channel 3
—	—	—	—	12	CH3-	Negative Differential Analog Input Pin of Channel 3
—	—	—	—	13	CH4+	Positive Differential Analog Input Pin of Channel 4
—	—	—	—	14	CH4-	Negative Differential Analog Input Pin of Channel 4
9	—	11	—	—	EP	Exposed Thermal Pad (EP); must be connected to V_{SS}.

3.1 Analog Inputs (CHn+, CHn-)

CHn+ and CHn- are differential input pins for channel n. The user can also connect CHn- pin to V_{SS} for a single-ended operation. See Figure 6-4 for differential and single-ended connection examples.

The maximum voltage range on each differential input pin is from V_{SS}-0.3V to V_{DD}+0.3V. Any voltage below or above this range will cause leakage currents through the Electrostatic Discharge (ESD) diodes at the input pins.

This ESD current can cause unexpected performance of the device. The input voltage at the input pins should be within the specified operating range defined in **Section 1.0 "Electrical Characteristics"** and **Section 4.0 "Description of Device Operation"**.

See **Section 4.5 "Input Voltage Range"** for more details of the input voltage range.

Figure 3-1 shows the input structure of the device. The device uses a switched capacitor input stage at the front end. C_{PIN} is the package pin capacitance and typically about 4 pF. D_1 and D_2 are the ESD diodes. C_{SAMPLE} is the differential input sampling capacitor.

3.2 Supply Voltage (V_{DD}, V_{SS})

V_{DD} is the power supply pin for the device. This pin requires an appropriate bypass ceramic capacitor of about 0.1 µF to ground to attenuate high frequency noise presented in application circuit board. An additional 10 µF capacitor (tantalum) in parallel is also recommended to further attenuate current spike noises. The supply voltage (V_{DD}) must be maintained in the 2.7V to 5.5V range for specified operation.

V_{SS} is the ground pin and the current return path of the device. The user must connect the V_{SS} pin to a ground plane through a low impedance connection. If an analog ground path is available in the application PCB (printed circuit board), it is highly recommended that the V_{SS} pin be tied to the analog ground path or isolated within an analog ground plane of the circuit board.

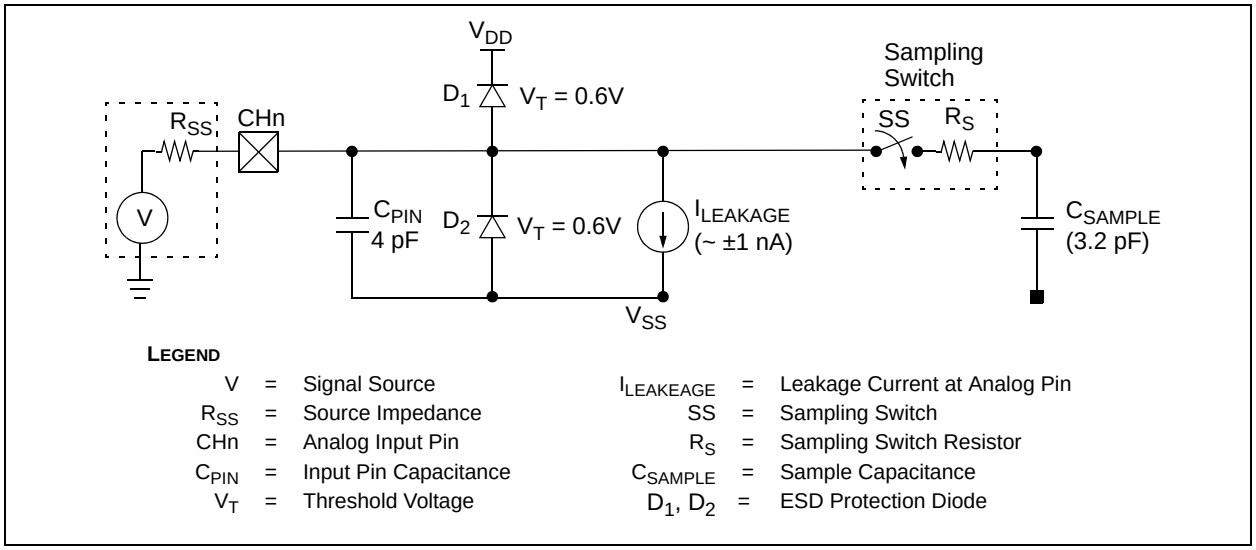

FIGURE 3-1: *Equivalent Analog Input Circuit.*

3.3 Serial Clock Pin (SCL)

SCL is the serial clock pin of the I^2C interface. The device act only as a slave and the SCL pin accepts only external serial clocks. The input data from the Master device is shifted into the SDA pin on the rising edges of the SCL clock and output from the slave device occurs at the falling edges of the SCL clock. The SCL pin is an open-drain N-channel driver. Therefore, it needs a pull-up resistor from the V_{DD} line to the SCL pin. Refer to **Section 5.3 "I^2C Serial Communications"** for more details of I^2C Serial Interface communication.

3.4 Serial Data Pin (SDA)

SDA is the serial data pin of the I^2C interface. The SDA pin is used for input and output data. In read mode, the conversion result is read from the SDA pin (output). In write mode, the device configuration bits are written (input) though the SDA pin. The SDA pin is an open-drain N-channel driver. Therefore, it needs a pull-up resistor from the V_{DD} line to the SDA pin. Except for start and stop conditions, the data on the SDA pin must be stable during the high period of the clock. The high or low state of the SDA pin can only change when the clock signal on the SCL pin is low. Refer to **Section 5.3 "I^2C Serial Communications"** for more details of I^2C Serial Interface communication.

Typical range of the pull-up resistor value for SCL and SDA is from 5 kΩ to 10 kΩ for standard (100 kHz) and fast (400 kHz) modes, and less than 1 kΩ for high speed mode (3.4 MHz).

3.5 Exposed Thermal Pad (EP)

There is an internal electrical connection between the Exposed Thermal Pad (EP) and the V_{SS} pin; they must be connected to the same potential on the Printed Circuit Board (PCB).

© 2009 Microchip Technology Inc.

4.0 DESCRIPTION OF DEVICE OPERATION

4.1 General Overview

The MCP3422/3/4 devices are differential multi-channel low-power, 18-Bit Delta-Sigma A/D converters with an I^2C serial interface. The devices contain an input channel selection multiplexer (mux), a programmable gain amplifier (PGA), an on-board voltage reference (2.048V), and an internal oscillator.

When the device powers up (POR is set), it automatically resets the configuration bits to default settings.

Device default settings are:

- Conversion bit resolution: 12 bits (240 sps)
- Input channel: Channel 1
- PGA gain setting: x1
- Continuous conversion

Once the device is powered-up, the user can reprogram the configuration bits using I^2C serial interface any time. The configuration bits are stored in volatile memory.

User selectable options are:

- Conversion bit resolution: 12, 14, 16, or 18 bits
- Input channel selection: CH1, CH2, CH3, or CH4.
- PGA Gain selection: x1, x2, x4, or x8
- Continuous or one-shot conversion

In the Continuous Conversion mode, the device converts the inputs continuously. While in the One-Shot Conversion mode, the device converts the input one time and stays in the low-power standby mode until it receives another command for a new conversion. During the standby mode, the device consumes less than 1 µA maximum.

4.2 Power-On-Reset (POR)

The device contains an internal Power-On-Reset (POR) circuit that monitors power supply voltage (V_{DD}) during operation. This circuit ensures correct device start-up at system power-up and power-down events.

The device resets all configuration register bits to default settings as soon as the POR is set.

The POR has built-in hysteresis and a timer to give a high degree of immunity to potential ripples and noises on the power supply. A 0.1 µF decoupling capacitor should be mounted as close as possible to the V_{DD} pin for additional transient immunity.

The threshold voltage is set at 2.2V with a tolerance of approximately ±5%. If the supply voltage falls below this threshold, the device will be held in a reset condition. The typical hysteresis value is approximately 200 mV.

The POR circuit is shut-down during the low-power standby mode. Once a power-up event has occurred, the device requires additional delay time (approximately 300 µs) before a conversion takes place. During this time, all internal analog circuitries are settled before the first conversion occurs. Figure 4-1 illustrates the conditions for power-up and power-down events under typical start-up conditions.

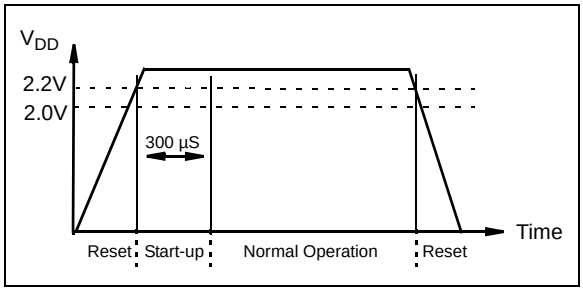

FIGURE 4-1: *POR Operation.*

4.3 Internal Voltage Reference

The device contains an on-board 2.048V voltage reference. This reference voltage is for internal use only and not directly measurable. The specification of the reference voltage is part of the device's gain and drift specifications. Therefore, there is no separate specification for the on-board reference.

4.4 Analog Input Channels

The user can select the input channel using the configuration register bits. Each channel can be used for differential or single-ended input.

Each input channel has a switched capacitor input structure. The internal sampling capacitor (3.2 pF for PGA = 1) is charged and discharged to process a conversion. The charging and discharging of the input sampling capacitor creates dynamic input currents at each input pin. The current is a function of the differential input voltages, and inversely proportional to the internal sampling capacitance, sampling frequency, and PGA setting.

© 2009 Microchip Technology Inc.

4.5 Input Voltage Range

The differential (V_{IN}) and common mode voltage (V_{INCOM}) at the input pins without considering PGA setting are defined by:

$$V_{IN} = (CHn+) - (CHn-)$$

$$V_{INCOM} = \frac{(CHn+) + (CHn-)}{2}$$

Where:

n = nth input channel (n=1, 2, 3, or 4)

The input signal levels are amplified by the internal programmable gain amplifier (PGA) at the front end of the ΔΣ modulator.

The user needs to consider two conditions for the input voltage range: (a) Differential input voltage range and (b) Absolute maximum input voltage range.

4.5.1 DIFFERENTIAL INPUT VOLTAGE RANGE

The device performs conversions using its internal reference voltage (V_{REF} = 2.048V). Therefore, the absolute value of the differential input voltage (V_{IN}), with PGA setting is included, needs to be less than the internal reference voltage. The device will output saturated output codes (all 0s or all 1s except sign bit) if the absolute value of the input voltage (V_{IN}), with PGA setting is included, is greater than the internal reference voltage (V_{REF} = 2.048V). The input full scale voltage range is given by:

EQUATION 4-1:

$$-V_{REF} \le (V_{IN} \bullet PGA) \le (V_{REF} - 1LSB)$$

Where:

V_{IN} = CHn+ - CHn-

V_{REF} = 2.048V

If the input voltage level is greater than the above limit, the user can use a voltage divider and bring down the input level within the full scale range. See Figure 6-7 for more details of the input voltage divider circuit.

4.5.2 ABSOLUTE MAXIMUM INPUT VOLTAGE RANGE

The input voltage at each input pin must be less than the following absolute maximum input voltage limits:

- Input voltage < V_{DD}+0.3V
- Input voltage > V_{SS}-0.3V

Any input voltage outside this range can turn on the input ESD protection diodes, and result in input leakage current, causing conversion errors, or permanently damage the device.

Care must be taken in setting the input voltage ranges so that the input voltage does not exceed the absolute maximum input voltage range.

4.6 Input Impedance

The device uses a switched-capacitor input stage using a 3.2 pF sampling capacitor. This capacitor is switched (charged and discharged) at a rate of the sampling frequency that is generated by on-board clock. The differential input impedance varies with the PGA settings. The typical differential input impedance during a normal mode operation is given by:

$$Z_{IN}(f) = 2.25\ M\Omega/PGA$$

Since the sampling capacitor is only switching to the input pins during a conversion process, the above input impedance is only valid during conversion periods. In a low power standby mode, the above impedance is not presented at the input pins. Therefore, only a leakage current due to ESD diode is presented at the input pins.

The conversion accuracy can be affected by the input signal source impedance when any external circuit is connected to the input pins. The source impedance adds to the internal impedance and directly affects the time required to charge the internal sampling capacitor. Therefore, a large input source impedance connected to the input pins can degrade the system performance, such as offset, gain, and Integral Non-Linearity (INL) errors. Ideally, the input source impedance should be zero. This can be achievable by using an operational amplifier with a closed-loop output impedance of tens of ohms.

4.7 Aliasing and Anti-aliasing Filter

Aliasing occurs when the input signal contains time-varying signal components with frequency greater than half the sample rate. In the aliasing conditions, the device can output unexpected output codes. For applications that are operating in electrical noise environments, the time-varying signal noise or high frequency interference components can be easily added to the input signals and cause aliasing. Although the device has an internal first order sinc filter, the filter response (Figure 2-11) may not give enough attenuation to all aliasing signal components. To avoid the aliasing, an external anti-aliasing filter, which can be accomplished with a simple RC low-pass filter, is typically used at the input pins. The low-pass filter cuts off the high frequency noise components and provides a band-limited input signal to the input pins.

4.8 Self-Calibration

The device performs a self-calibration of offset and gain for each conversion. This provides reliable conversion results from conversion-to-conversion over variations in temperature as well as power supply fluctuations.

© 2009 Microchip Technology Inc.

4.9 Digital Output Codes and Conversion to Real Values

4.9.1 DIGITAL OUTPUT CODE FROM DEVICE

The digital output code is proportional to the input voltage and PGA settings. The output data format is a binary two's complement. With this code scheme, the MSB can be considered a sign indicator. When the MSB is a logic '0', the input is positive. When the MSB is a logic '1', the input is negative. The following is an example of the output code:

a. for a negative full scale input voltage: 100...000

Example: (CHn+ - CHn-) •PGA = -2.048V

b. for a zero differential input voltage: 000...000

Example: (CHn+ - CHn-) = 0

c. for a positive full scale input voltage: 011...111

Example: (CHn+ - CHn-) • PGA = 2.048V

The MSB (sign bit) is always transmitted first through the I^2C serial data line. The resolution for each conversion is 18, 16, 14, or 12 bits depending on the conversion rate selection bit settings by the user.

The output codes will not roll-over even if the input voltage exceeds the maximum input range. In this case, the code will be locked at `0111...11` for all voltages greater than (V_{REF} - 1 LSB)/PGA and `1000...00` for voltages less than -V_{REF}/PGA. Table 4-2 shows an example of output codes of various input levels for 18 bit conversion mode. Table 4-3 shows an example of minimum and maximum output codes for each conversion rate option.

The number of output code is given by:

EQUATION 4-2:

Number of Output Code =

$$= (Maximum\ Code + 1) \times PGA \times \frac{(CHn+ - CHn-)}{2.048V}$$

Where:

See Table 4-3 for Maximum Code

The LSB of the data conversion is given by:

EQUATION 4-3:

$$LSB = \frac{2 \times V_{REF}}{2^N} = \frac{2 \times 2.048V}{2^N}$$

Where:

N = Resolution, which is programmed in the Configuration Register.

Table 4-1 shows the LSB size of each conversion rate setting. The measured unknown input voltage is obtained by multiplying the output codes with LSB. See the following section for the input voltage calculation using the output codes.

TABLE 4-1: RESOLUTION SETTINGS VS. LSB

Resolution Setting	LSB
12 bits	1 mV
14 bits	250 µV
16 bits	62.5 µV
18 bits	15.625 µV

TABLE 4-2: EXAMPLE OF OUTPUT CODE FOR 18 BITS (NOTE 1, NOTE 2)

Input Voltage: [CHn+ - CHn-] • PGA	Digital Output Code
≥ V_{REF}	`011111111111111111`
V_{REF} - 1 LSB	`011111111111111111`
2 LSB	`000000000000000010`
1 LSB	`000000000000000001`
0	`000000000000000000`
-1 LSB	`111111111111111111`
-2 LSB	`111111111111111110`
- V_{REF}	`100000000000000000`
< -V_{REF}	`100000000000000000`

Note 1: MSB is a sign indicator:
0: Positive input (CHn+ > CHn-)
1: Negative input (CHn+ < CHn-)

2: Output data format is binary two's complement.

TABLE 4-3: MINIMUM AND MAXIMUM OUTPUT CODES (NOTE)

Resolution Setting	Data Rate	Minimum Code	Maximum Code
12	240 SPS	-2048	2047
14	60 SPS	-8192	8191
16	15 SPS	-32768	32767
18	3.75 SPS	-131072	131071

Note: Maximum n-bit code = 2^{N-1} - 1
Minimum n-bit code = -1 x 2^{N-1}

4.9.2 CONVERTING THE DEVICE OUTPUT CODE TO INPUT SIGNAL VOLTAGE

When the user gets the digital output codes from the device as described in **Section 4.9.1 "Digital output code from device"**, the next step is converting the digital output codes to a measured input voltage. Equation 4-4 shows an example of converting the output codes to its corresponding input voltage.

If the sign indicator bit (MSB) is `'0'`, the input voltage is obtained by multiplying the output code with the LSB and divided by the PGA setting.

If the sign indicator bit (MSB) is `'1'`, the output code needs to be converted to two's complement before multiplied by LSB and divided by the PGA setting. Table 4-4 shows an example of converting the device output codes to input voltage.

EQUATION 4-4: CONVERTING OUTPUT CODES TO INPUT VOLTAGE

If MSB = 0 (Positive Output Code):

$$\text{Input Voltage} = (\text{Output Code}) \bullet \frac{LSB}{PGA}$$

If MSB = 1 (Negative Output Code):

$$\text{Input Voltage} = (2\text{'s complement of Output Code}) \bullet \frac{LSB}{PGA}$$

Where:

LSB	=	See Table 4-1
2's complement	=	1's complement + 1

TABLE 4-4: EXAMPLE OF CONVERTING OUTPUT CODE TO VOLTAGE (WITH 18 BIT SETTING)

Input Voltage [CHn+ - CHn-] • PGA]	Digital Output Code	MSB	Example of Converting Output Codes to Input Voltage
$\geq V_{REF}$	011111111111111111	0	$(2^{16}+2^{15}+2^{14}+2^{13}+2^{12}+2^{11}+2^{10}+2^{9}+2^{8}+2^{7}+2^{6}+2^{5}+2^{4}+2^{3}+2^{2}+2^{1}+2^{0})$ x LSB(15.625µV)/PGA = 2.048 (V) for PGA = 1
V_{REF} - 1 LSB	011111111111111111	0	$(2^{16}+2^{15}+2^{14}+2^{13}+2^{12}+2^{11}+2^{10}+2^{9}+2^{8}+2^{7}+2^{6}+2^{5}+2^{4}+2^{3}+2^{2}+2^{1}+2^{0})$ x LSB(15.625µV)/PGA = 2.048 (V) for PGA = 1
2 LSB	000000000000000010	0	$(0+0+0+0+0+0+0+0+0+0+0+0+0+0+0+0+2^{1}+0)$x LSB(15.625µV)/PGA = 31.25 (µV) for PGA = 1
1 LSB	000000000000000001	0	$(0+0+0+0+0+0+0+0+0+0+0+0+0+0+0+0+2^{0})$x LSB(15.625µV)/PGA = 15.625 (µV)for PGA = 1
0	000000000000000000	0	(0+0+0+0+0+0+0+0+0+0+0+0+0+0+0+0+0)x LSB(15.625µV)/PGA = 0 V (V) for PGA = 1
-1 LSB	111111111111111111	1	$-(0+0+0+0+0+0+0+0+0+0+0+0+0+0+0+0+2^{0})$x LSB(15.625µV)/PGA = - 15.625 (µV)for PGA = 1
-2 LSB	111111111111111110	1	$-(0+0+0+0+0+0+0+0+0+0+0+0+0+0+0+0+2^{1}+0)$x LSB(15.625µV)/PGA = - 31.25 (µV)for PGA = 1
- V_{REF}	100000000000000000	1	$-(2^{17}+0+0+0+0+0+0+0+0+0+0+0+0+0+0+0+0+0)$ x LSB(15.625µV)/PGA = - 2.048 (V) for PGA = 1
$\leq -V_{REF}$	100000000000000000	1	$-(2^{17}+0+0+0+0+0+0+0+0+0+0+0+0+0+0+0+0+0)$ x LSB(15.625µV)/PGA = - 2.048 (V) for PGA = 1

© 2009 Microchip Technology Inc.

5.0 USING THE DEVICES

5.1 Operating Modes

The user operates the device by setting up the device configuration register using a write command (see Figure 5-3) and reads the conversion data using a read command (see Figure 5-4 and Figure 5-5). The device operates in two modes: (a) Continuous Conversion Mode or (b) One-Shot Conversion Mode (single conversion). This mode selection is made by setting the $\overline{O}$/C bit in the Configuration Register. Refer to **Section 5.2 "Configuration Register"** for more information.

5.1.1 CONTINUOUS CONVERSION MODE ($\overline{O}$/C BIT = 1)

The device performs a Continuous Conversion if the $\overline{O}$/C bit is set to logic "high". Once the conversion is completed, $\overline{RDY}$ bit is toggled to '0' and the result is placed at the output data register. The device immediately begins another conversion and overwrites the output data register with the most recent result. The device clears the data ready flag ($\overline{RDY}$ bit = 0) when the conversion is completed. The device sets the ready flag bit ($\overline{RDY}$ bit = 1), if the latest conversion result has been read by the Master.

- **When writing configuration register:**
  - Setting $\overline{RDY}$ bit in continuous mode does not affect anything
- **When reading conversion data:**
  - $\overline{RDY}$ bit = 0 means the latest conversion result is ready
  - $\overline{RDY}$ bit = 1 means the conversion result is not updated since the last reading. A new conversion is under processing and the $\overline{RDY}$ bit will be cleared when the new conversion result is ready

5.1.2 ONE-SHOT CONVERSION MODE ($\overline{O}$/C BIT = 0)

Once the One-Shot Conversion Mode (single conversion) is selected, the device performs only one conversion, updates the output data register, clears the data ready flag ($\overline{RDY}$ = 0), and then enters a low power standby mode. A new One-Shot Conversion is started again when the device receives a new write command with $\overline{RDY}$ = 1.

- **When writing configuration register:**
  - The $\overline{RDY}$ bit needs to be set to begin a new conversion in one-shot mode
- **When reading conversion data:**
  - RDY bit = 0 means the latest conversion result is ready
  - RDY bit = 1 means the conversion result is not updated since the last reading. A new conversion is under processing and the RDY bit will be cleared when the new conversion is done

This One-Shot Conversion Mode is highly recommended for low power operating applications where the conversion result is needed by request on demand. During the low current standby mode, the device consumes less than 1 µA maximum (or 300 nA typical). For example, if the user collects 18 bit conversion data once a second in One-Shot Conversion mode, the device draws only about one fourth of its total operating current. In this example, the device consumes approximately 36 µA (135 µA / 3.75 SPS = 36 µA), if the device performs only one conversion per second (1 SPS) in 18-bit conversion mode with 3V power supply.

5.2 Configuration Register

The device has an 8-bit wide configuration register to select for: input channel, conversion mode, conversion rate, and PGA gain. This register allows the user to change the operating condition of the device and check the status of the device operation.

The user can rewrite the configuration byte any time during the device operation. Register 5-1 shows the configuration register bits.

REGISTER 5-1: CONFIGURATION REGISTER

R/W-1	R/W-0	R/W-0	R/W-1	R/W-0	R/W-0	R/W-0	R/W-0
$\overline{\text{RDY}}$	C1	C0	$\overline{\text{O}}$/C	S1	S0	G1	G0
1 *	0 *	0 *	1 *	0 *	0 *	0 *	0 *
bit 7							bit 0

* Default Configuration after Power-On Reset

Legend:			
R = Readable bit	W = Writable bit	U = Unimplemented bit, read as ‘0’	
-n = Value at POR	‘1’ = Bit is set	‘0’ = Bit is cleared	x = Bit is unknown

bit 7 **$\overline{\text{RDY}}$:** Ready Bit

This bit is the data ready flag. In read mode, this bit indicates if the output register has been updated with a latest conversion result. In One-Shot Conversion mode, writing this bit to “1” initiates a new conversion.

Reading $\overline{\text{RDY}}$ bit with the read command:

1 = Output register has not been updated
0 = Output register has been updated with the latest conversion result

Writing $\overline{\text{RDY}}$ bit with the write command:

Continuous Conversion mode: No effect

One-Shot Conversion mode:
1 = Initiate a new conversion
0 = No effect

bit 6-5 **C1-C0:** Channel Selection Bits

00 = Select Channel 1 **(Default)**
01 = Select Channel 2
10 = Select Channel 3 **(MCP3424 only, treated as “00” by the MCP3422/MCP3423)**
11 = Select Channel 4 **(MCP3424 only, treated as “01” by the MCP3422/MCP3423)**

bit 4 **$\overline{\text{O}}$/C:** Conversion Mode Bit

1 = Continuous Conversion Mode **(Default)**. The device performs data conversions continuously
0 = One-Shot Conversion Mode. The device performs a single conversion and enters a low power standby mode until it receives another write or read command

bit 3-2 **S1-S0:** Sample Rate Selection Bit

00 = 240 SPS (12 bits) **(Default)**
01 = 60 SPS (14 bits)
10 = 15 SPS (16 bits)
11 = 3.75 SPS (18 bits)

bit 1-0 **G1-G0:** PGA Gain Selection Bits

00 = x1 **(Default)**
01 = x2
10 = x4
11 = x8

© 2009 Microchip Technology Inc.

If the configuration byte is read repeatedly by clocking continuously after reading the data bytes (i.e., after the 5th byte in the 18-bit conversion mode), the state of the $\overline{RDY}$ bit indicates whether the device is ready with new conversion result. When the Master finds the $\overline{RDY}$ bit is cleared, it can send a not-acknowledge (NAK) bit and a stop bit to exit the current read operation and send a new read command for the latest conversion data. Once the conversion data has been read, the ready bit toggles to '1' until the next new conversion data is ready. The conversion data in the output register is overwritten every time a new conversion is completed.

Figure 5-4 and Figure 5-5 show the examples of reading the conversion data. The user can rewrite the configuration byte any time for a new setting. Table 5-1 and Table 5-2 show the examples of the configuration bit operation.

TABLE 5-1: WRITE CONFIGURATION BITS

R/$\overline{W}$	$\overline{O}$/C	$\overline{RDY}$	Operation
0	0	0	No effect if all other bits remain the same - operation continues with the previous settings.
0	0	1	Initiate One-Shot Conversion.
0	1	0	Initiate Continuous Conversion.
0	1	1	Initiate Continuous Conversion.

TABLE 5-2: READ CONFIGURATION BITS

R/$\overline{W}$	$\overline{O}$/C	$\overline{RDY}$	Operation
1	0	0	New conversion result in One-Shot conversion mode has just been read. The $\overline{RDY}$ bit remains low until set by a new write command.
1	0	1	One-Shot Conversion is in progress. The conversion result is not updated yet. The $\overline{RDY}$ bit stays high until the current conversion is completed.
1	1	0	New conversion result in Continuous Conversion mode has just been read. The $\overline{RDY}$ bit changes to high after reading the conversion data.
1	1	1	The conversion result in Continuous Conversion mode was already read. The next new conversion data is not ready. The $\overline{RDY}$ bit stays high until a new conversion is completed.

5.3 I^{2}C Serial Communications

The device communicates with Master (microcontroller) through a serial I^{2}C (Inter-Integrated Circuit) interface and support standard (100 kbits/sec), fast (400 kbits/sec) and high-speed (3.4 Mbits/sec) modes. The serial I^{2}C is a bidirectional 2-wire data bus communication protocol using open-drain SCL and SDA lines.

The device can only be addressed as a slave. Once addressed, it can receive configuration bits with a write command or transmit the latest conversion results with a read command. The serial clock pin (SCL) is an input only and the serial data pin (SDA) is bidirectional. The Master starts communication by sending a START bit and terminates the communication by sending a STOP bit. In read mode, the device releases the SDA line after receiving NAK and STOP bits.

An example of a hardware connection diagram is shown in Figure 6-1. More details of the I^{2}C bus characteristic is described in **Section 5.6 "I^{2}C Bus Characteristics"**.

5.3.1 I^{2}C DEVICE ADDRESSING

The first byte after the START bit is always the address byte of the device, which includes the device code (4 bits), address bits (3 bits), and R/$\overline{W}$ bit. The device code for the devices is **1101**, which is programmed at the factory. The I^{2}C address bits (A2, A1, A0 bits) for the MCP3423 and MCP3424 are user configurable and determined by the logic status of the two external address selection pins on the user's application board (Adr0 and Adr1 pins). The Master must know the Adr0 and Adr1 pin conditions before sending read or write command. Figure 5-1 shows the details of the address byte.

The three I^{2}C address bits allow up to eight devices on the same I^{2}C bus line. The (R/$\overline{W}$) bit determines if the Master device wants to read the conversion data or write to the Configuration register. If the (R/$\overline{W}$) bit is set (read mode), the device outputs the conversion data in the following clocks. If the (R/$\overline{W}$) bit is cleared (write mode), the device expects a configuration byte in the following clocks. When the device receives the correct address byte, it outputs an acknowledge bit after the R/$\overline{W}$ bit.

Figure 5-1 shows the address byte. Figure 5-3 through Figure 5-5 show how to write the configuration register bits and read the conversion results.

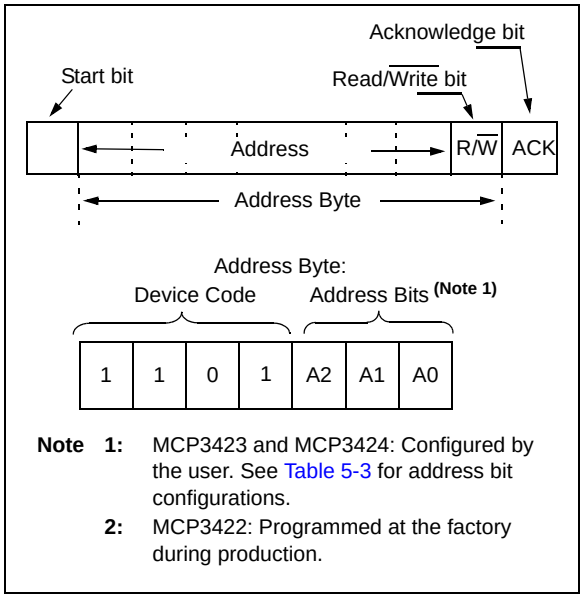

FIGURE 5-1: *Address Byte.*

5.3.2 DEVICE ADDRESS BITS (A2, A1, A0) AND ADDRESS SELECTION PINS (MCP3423 AND MCP3424)

The MCP3423 and MCP3424 have two external device address pins (Adr1, Adr0). These pins can be set to a logic high (or tied to V_{DD}), low (or tied to V_{SS}), or left floating (not connected to anything, or tied to $V_{DD}/2$), These combinations of logic level using the two pins allow eight possible addresses. Table 5-3 shows the device address depending on the logic status of the address selection pins.

The device samples the logic status of the Adr0 and Adr1 pins in the following events:

a. Device power-up.

b. General Call Reset
(See **Section 5.4 "General Call"**).

c. General Call Latch
(See **Section 5.4 "General Call"**).

The device samples the logic status (address pins) during the above events, and latches the values until a new latch event occurs. During normal operation (after the address pins are latched), the address pins are internally disabled from the rests of the internal circuit.

It is recommended to issue a General Call Reset or General Call Latch command once after the device has powered up. This will ensure that the device reads the address pins in a stable condition, and avoid latching the address bits while the power supply is ramping up. This might cause inaccurate address pin detection.

When the address pin is left "floating":

When the address pin is left "floating", the address pin momentarily outputs a short pulse with an amplitude of about $V_{DD}/2$ during the latch event. The device also latches this pin voltage at the same time.

If the "floating" pin is connected to a large parasitic capacitance (>20 pF) or to a long PCB trace, this short floating voltage output can be altered. As a result, the device may not latch the pin correctly.

It is strongly recommended to keep the "floating" pin pad as short as possible in the customer application PCB and minimize the parasitic capacitance to the pin as small as possible (< 20 pF).

Figure 5-2 shows an example of the Latch voltage output at the address pin when the address pin is left "floating". The waveform at the Adr0 pin is captured by using an oscilloscope probe with 15 pF of capacitance. The device latches the floating condition immediately after the General Call Latch command.

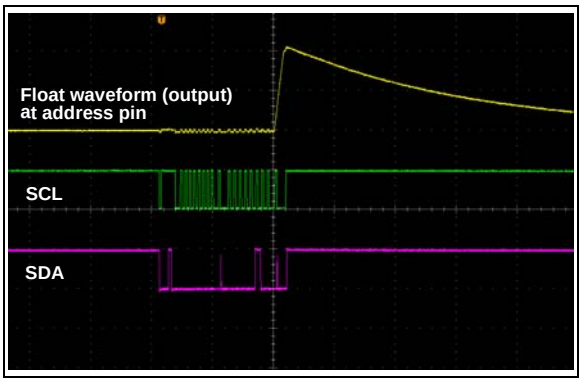

FIGURE 5-2: *General Call Latch Command and Voltage Output at Address Pin Left "Floating" (MCP3423 and MCP3424).*

© 2009 Microchip Technology Inc.

TABLE 5-3: ADDRESS BITS VS. ADDRESS SELECTION PINS FOR (MCP3423 AND MCP3424 ONLY) (NOTES 1, 2, 3)

I²C Device Address Bits			Logic Status of Address Selection Pins	
A2	**A1**	**A0**	**Adr0 Pin**	**Adr1 Pin**
0	0	0	0 (Addr_Low)	0 (Addr_Low)
0	0	1	0 (Addr_Low)	Float
0	1	0	0 (Addr_Low)	1 (Addr_High)
1	0	0	1 (Addr_High)	0 (Addr_Low)
1	0	1	1 (Addr_High)	Float
1	1	0	1 (Addr_High)	1 (Addr_High)
0	1	1	Float	0 (Addr_Low)
1	1	1	Float	1 (Addr_High)
0	0	0	Float	Float

Note 1: Float: (a) Leave pin without connecting to anything (left floating), or (b) apply Addr_Float voltage.

2: The user can tie the pins to V_{SS} or V_{DD}:
- Tie to V_{SS} for Addr_Low
- Tie to V_{DD} for Addr_High

3: See Addr_Low, Addr_High, and Addr_Float parameters in **Electrical Characteristics Table**.

5.3.3 WRITING A CONFIGURATION BYTE TO THE DEVICE

When the Master sends an address byte with the R/$\overline{W}$ bit low (R/$\overline{W}$ = 0), the device expects one configuration byte following the address. Any byte sent after this second byte will be ignored. The user can change the operating mode of the device by writing the configuration register bits.

If the device receives a write command with a new configuration setting, the device immediately begins a new conversion and updates the conversion data.

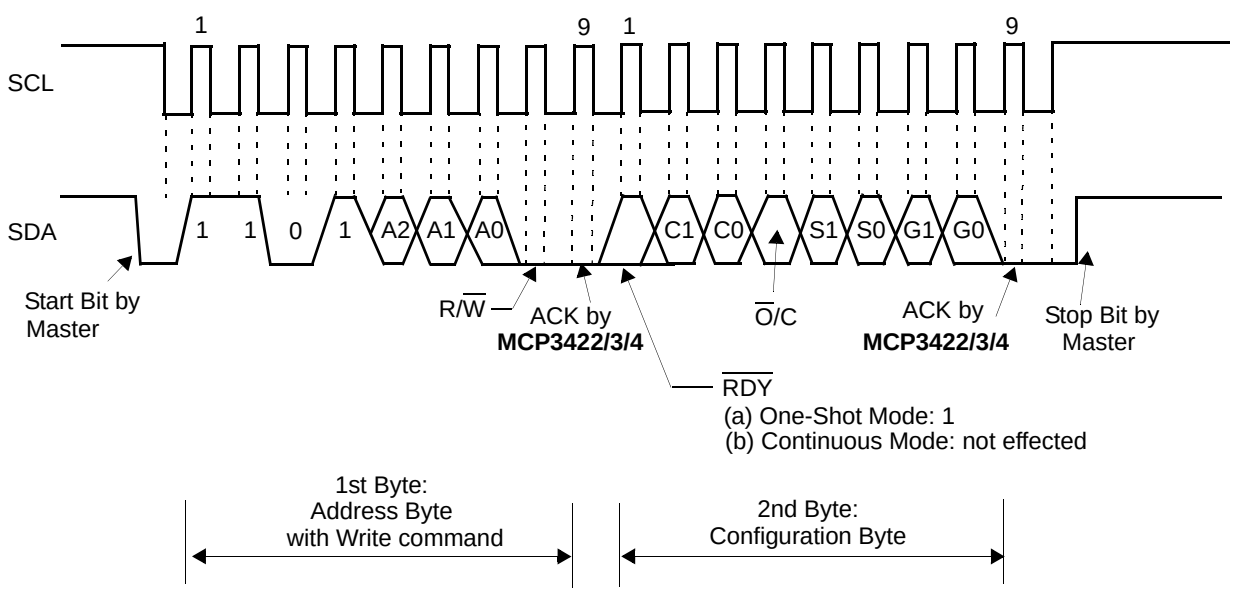

Note: – Stop bit can be issued any time during writing.
– **MCP3422/3/4** device code is 1101 (programmed at the factory).
– See Figure 5-1 for details in Address Byte.

FIGURE 5-3: *Timing Diagram For Writing To The MCP3422/3/4.*

5.3.4 READING OUTPUT CODES AND CONFIGURATION BYTE FROM THE DEVICE

When the Master sends a read command (R/$\overline{W}$ = 1), the device outputs both the conversion data and configuration bytes. Each byte consists of 8 bits with one acknowledge (ACK) bit. The ACK bit after the address byte is issued by the device and the ACK bits after each conversion data bytes are issued by the Master.

When the device is configured for 18-bit conversion mode, it outputs three data bytes followed by a configuration byte. The first 6 data bits in the first data byte are repeated MSB (= sign bit) of the conversion data. The user can ignore the first 6 data bits, and take the 7th data bit (D17) as the MSB of the conversion data. The LSB of the 3rd data byte is the LSB of the conversion data (D0).

If the device is configured for 12, 14, or 16 bit-mode, the device outputs two data bytes followed by a configuration byte. In 16 bit-conversion mode, the MSB (= sign bit) of the first data byte is D15. In 14-bit conversion mode, the first two bits in the first data byte are repeated MSB bits and can be ignored, and the 3rd bit (D13) is the MSB (=sign bit) of the conversion data. In 12-bit conversion mode, the first four bits are repeated MSB bits and can be ignored. The 5th bit (D11) of the byte represents the MSB (= sign bit) of the conversion data. Table 5-3 summarizes the conversion data output of each conversion mode.

The configuration byte follows the output data bytes. The device repeatedly outputs the configuration byte only if the Master sends clocks repeatedly after the data bytes.

The device terminates the current outputs when it receives a Not-Acknowledge (NAK), a repeated start or a stop bit at any time during the output bit stream. It is not required to read the configuration byte. However, the Master may read the configuration byte to check the $\overline{RDY}$ bit condition.The Master may continuously send clock (SCL) to repeatedly read the configuration byte (to check the $\overline{RDY}$ bit status).

Figures 5-4 and 5-5 show the timing diagrams of the reading.

TABLE 5-3: OUTPUT CODES OF EACH RESOLUTION OPTION

Conversion Option	Digital Output Codes
18-bits	MMMMMMD17D16 (1st data byte) - D15 ~ D8 (2nd data byte) - D7 ~ D0 (3rd data byte) - Configuration byte. **(Note 1)**
16-bits	D15 ~ D8 (1st data byte) - D7 ~ D0 (2nd data byte) - Configuration byte. **(Note 2)**
14-bits	MMD13D ~ D8 (1st data byte) - D7 ~ D0 (2nd data byte) - Configuration byte. **(Note 3)**
12-bits	MMMMD11 ~ D8 (1st data byte) - D7 ~ D0 (2nd data byte) - Configuration byte. **(Note 4)**

Note 1: D17 is MSB (= sign bit), M is repeated MSB of the data byte.
2: D15 is MSB (= sign bit).
3: D13 is MSB (= sign bit), M is repeated MSB of the data byte.
4: D11 is MSB (= sign bit), M is repeated MSB of the data byte.

© 2009 Microchip Technology Inc.

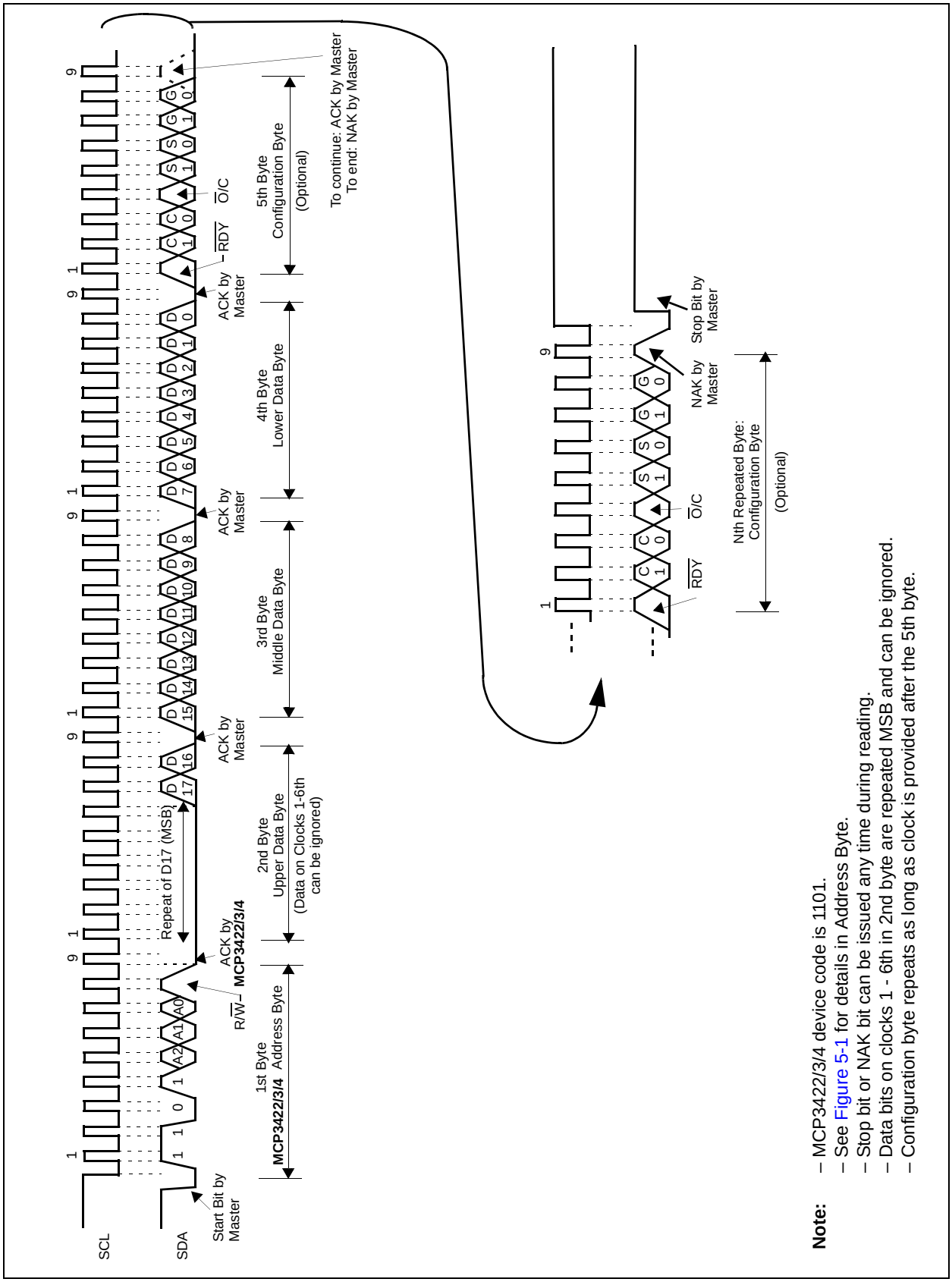

FIGURE 5-4: *Timing Diagram For Reading From The MCP3422/3/4 With 18-Bit Mode.*

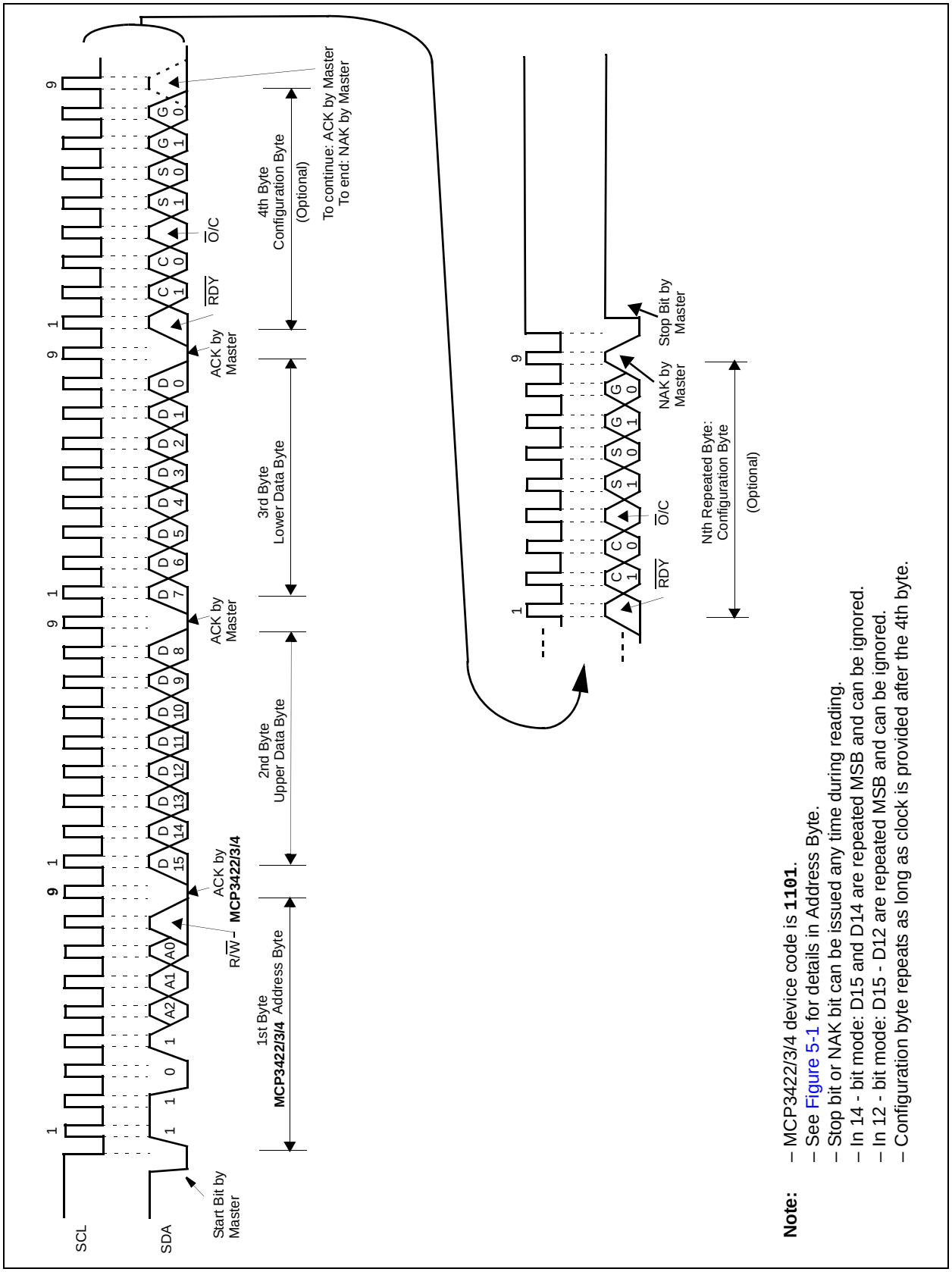

FIGURE 5-5: *Timing Diagram For Reading From The MCP3422/3/4 With 12-Bit to 16-Bit Modes.*

© 2009 Microchip Technology Inc.

5.4 General Call

The device acknowledges the general call address (0x00 in the first byte). The meaning of the general call address is always specified in the second byte. Refer to Figure 5-6. The device supports the following three general calls.

For more information on the general call, or other I^2C modes, please refer to the Phillips I^2C specification.

5.4.1 GENERAL CALL RESET

The general call reset occurs if the second byte is `'00000110'` (06h). At the acknowledgement of this byte, the device will abort current conversion and perform the following tasks:

(a) Internal reset similar to a Power-On-Reset (POR). All configuration and data register bits are reset to default values.

(b) Latch the logic status of external address selection pins (Adr0 and Adr1 pins).

5.4.2 GENERAL CALL LATCH (MCP3423 AND MCP3424)

The general call latch occurs if the second byte is `'00000100'` (04h). The device will latch the logic status of the external address selection pins (Adr0 and Adr1 pins), but will not perform a reset.

5.4.3 GENERAL CALL CONVERSION

The general call conversion occurs if the second byte is **`'00001000'`** (08h). All devices on the bus initiate a conversion simultaneously. When the device receives this command, the configuration will be set to the One-Shot Conversion mode and a single conversion will be performed. The PGA and data rate settings are unchanged with this general call.

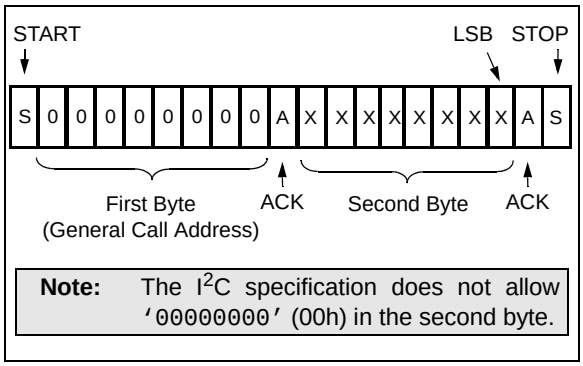

FIGURE 5-6: *General Call Address Format.*

5.5 High-Speed (HS) Mode

The I^2C specification requires that a high-speed mode device must be 'activated' to operate in high-speed mode. This is done by sending a special address byte of "`00001XXX`" following the START bit. The "`XXX`" bits are unique to the High-Speed (HS) mode Master. This byte is referred to as the High-Speed (HS) Master Mode Code (HSMMC). The MCP3422/3/4 devices do not acknowledge this byte. However, upon receiving this code, the device switches on its HS mode filters and communicates up to 3.4 MHz on SDA and SCL bus lines. The device will switch out of the HS mode on the next STOP condition.

For more information on the HS mode, or other I^2C modes, please refer to the Philips I^2C specification.

5.6 I^2C Bus Characteristics

The I^2C specification defines the following bus protocol:

- Data transfer may be initiated only when the bus is not busy
- During data transfer, the data line must remain stable whenever the clock line is HIGH. Changes in the data line while the clock line is HIGH will be interpreted as a START or STOP condition

Accordingly, the following bus conditions have been defined using Figure 5-7.

5.6.1 BUS NOT BUSY (A)

Both data and clock lines remain HIGH.

5.6.2 START DATA TRANSFER (B)

A HIGH to LOW transition of the SDA line while the clock (SCL) is HIGH determines a START condition. All commands must be preceded by a START condition.

5.6.3 STOP DATA TRANSFER (C)

A LOW to HIGH transition of the SDA line while the clock (SCL) is HIGH determines a STOP condition. All operations can be ended with a STOP condition.

5.6.4 DATA VALID (D)

The state of the data line represents valid data when, after a START condition, the data line is stable for the duration of the HIGH period of the clock signal.

The data on the line must be changed during the LOW period of the clock signal. There is one clock pulse per bit of data.

Each data transfer is initiated with a START condition and terminated with a STOP condition.

5.6.5 ACKNOWLEDGE AND NON-ACKNOWLEDGE

The Master (microcontroller) and the slave (MCP3422/3/4) use an acknowledge pulse as a hand shake of communication for each byte. The ninth clock pulse of each byte is used for the acknowledgement. The clock pulse is always provided by the Master (microcontroller) and the acknowledgement is issued by the receiving device of the byte (Note: The transmitting device must release the SDA line during the acknowledge pulse.). The acknowledgement is achieved by pulling-down the SDA line “LOW” during the 9th clock pulse by the receiving device.

During reads, the Master (microcontroller) can terminate the current read operation by not providing an acknowledge bit (not Acknowledge (NAK)) on the last byte. In this case, the MCP3422/3/4 devices release the SDA line to allow the Master (microcontroller) to generate a STOP or repeated START condition.

The non-acknowledgement (NAK) is issued by providing the SDA line to “HIGH” during the 9th clock pulse.

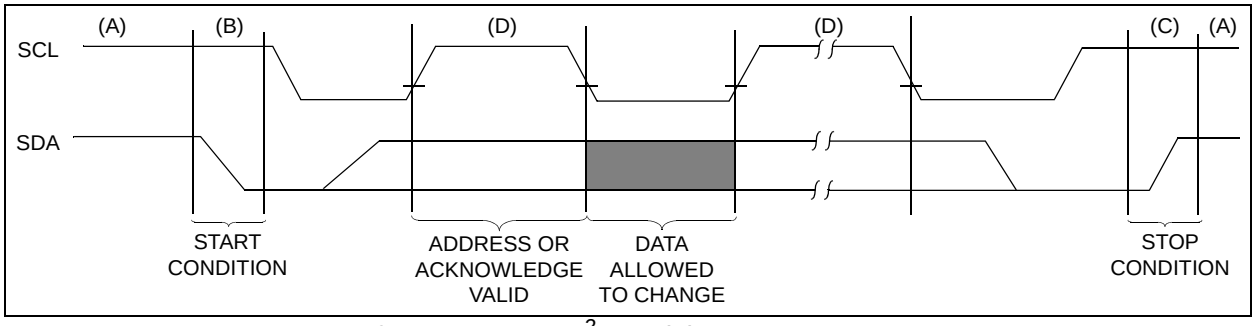

FIGURE 5-7: *Data Transfer Sequence on I²C Serial Bus.*

© 2009 Microchip Technology Inc.

TABLE 5-4: I²C SERIAL TIMING SPECIFICATIONS

Electrical Specifications: Unless otherwise specified, all limits are specified for T_A = -40 to +85°C, V_{DD} = +2.7V to +5.0V, V_{SS} = 0V, CHn+ = CHn- = V_{REF}/2.

Parameters	Sym	Min	Typ	Max	Units	Conditions
Standard Mode (100 kHz)						
Clock frequency	f_{SCL}	0	—	100	kHz	
Clock high time	T_{HIGH}	4000	—	—	ns	
Clock low time	T_{LOW}	4700	—	—	ns	
SDA and SCL rise time	T_R	—	—	1000	ns	From V_{IL} to V_{IH} **(Note 1)**
SDA and SCL fall time	T_F	—	—	300	ns	From V_{IH} to V_{IL} **(Note 1)**
START condition hold time	$T_{HD:STA}$	4000	—	—	ns	After this period, the first clock pulse is generated.
START (Repeated) condition setup time	$T_{SU:STA}$	4700	—	—	ns	
Data hold time	$T_{HD:DAT}$	0	—	3450	ns	**(Note 3)**
Data input setup time	$T_{SU:DAT}$	250	—	—	ns	
STOP condition setup time	$T_{SU:STO}$	4000	—	—	ns	
Output valid from clock	T_{AA}	0	—	3750	ns	**(Note 2, Note 3)**
Bus free time	T_{BUF}	4700	—	—	ns	Time between START and STOP conditions.
Fast Mode (400 kHz)						
Clock frequency	T_{SCL}	0	—	400	kHz	
Clock high time	T_{HIGH}	600	—	—	ns	
Clock low time	T_{LOW}	1300	—	—	ns	
SDA and SCL rise time	T_R	20 + 0.1Cb	—	300	ns	From V_{IL} to V_{IH} **(Note 1)**
SDA and SCL fall time	T_F	20 + 0.1Cb	—	300	ns	From V_{IH} to V_{IL} **(Note 1)**
START condition hold time	$T_{HD:STA}$	600	—	—	ns	After this period, the first clock pulse is generated
START (Repeated) condition setup time	$T_{SU:STA}$	600	—	—	ns	
Data hold time	$T_{HD:DAT}$	0	—	900	ns	**(Note 4)**
Data input setup time	$T_{SU:DAT}$	100	—	—	ns	
STOP condition setup time	$T_{SU:STO}$	600	—	—	ns	
Output valid from clock	T_{AA}	0	—	1200	ns	**(Note 2, Note 3)**
Bus free time	T_{BUF}	1300	—	—	ns	Time between START and STOP conditions.

Note 1: This parameter is ensured by characterization and not 100% tested.

2: This specification is not a part of the I²C specification. This specification is equivalent to the Data Hold Time ($T_{HD:DAT}$) plus SDA Fall (or rise) time: $T_{AA} = T_{HD:DAT} + T_F$ (OR T_R).

3: If this parameter is too short, it can create an unintended Start or Stop condition to other devices on the bus line. If this parameter is too long, Clock Low time (T_{LOW}) can be affected.

4: For Data Input: If this parameter is too long, the Data Input Setup ($T_{SU:DAT}$) or Clock Low time (T_{LOW}) can be affected. For Data Output: This parameter is characterized, and tested indirectly by testing T_{AA} parameter.

TABLE 5-4: I²C SERIAL TIMING SPECIFICATIONS (CONTINUED)

Electrical Specifications: Unless otherwise specified, all limits are specified for T_A = -40 to +85°C, V_{DD} = +2.7V to +5.0V, V_{SS} = 0V, CHn+ = CHn- = V_{REF}/2.

Parameters	Sym	Min	Typ	Max	Units	Conditions
High Speed Mode (3.4 MHz)						
Clock frequency	f_{SCL}	0	—	3.4	MHz	C_b = 100 pF
		0	—	1.7	MHz	C_b = 400 pF
Clock high time	T_{HIGH}	60	—	—	ns	C_b = 100 pF, f_{SCL} = 3.4 MHz
		120	—	—	ns	C_b = 400 pF, f_{SCL} = 1.7 MHz
Clock low time	T_{LOW}	160	—	—	ns	C_b = 100 pF, f_{SCL} = 3.4 MHz
		320	—	—	ns	C_b = 400 pF, f_{SCL} = 1.7 MHz
SCL rise time **(Note 1)**	T_R	—	—	40	ns	From V_{IL} to V_{IH}, C_b = 100 pF, f_{SCL} = 3.4 MHz
		—	—	80	ns	From V_{IL} to V_{IH}, C_b = 400 pF, f_{SCL} = 1.7 MHz
SCL fall time **(Note 1)**	T_F	—	—	40	ns	From V_{IH} to V_{IL}, C_b = 100 pF, f_{SCL} = 3.4 MHz
		—	—	80	ns	From V_{IH} to V_{IL}, C_b = 400 pF, f_{SCL} = 1.7 MHz
SDA rise time **(Note 1)**	$T_{R: DAT}$	—	—	80	ns	From V_{IL} to V_{IH}, C_b = 100 pF, f_{SCL} = 3.4 MHz
		—	—	160	ns	From V_{IL} to V_{IH}, C_b = 400 pF, f_{SCL} = 1.7 MHz
SDA fall time **(Note 1)**	$T_{F: DATA}$	—	—	80	ns	From V_{IH} to V_{IL}, C_b = 100 pF, f_{SCL} = 3.4 MHz
		—	—	160	ns	From V_{IH} to V_{IL}, C_b = 400 pF, f_{SCL} = 1.7 MHz
Data hold time **(Note 4)**	$T_{HD:DAT}$	0	—	70	ns	C_b = 100 pF, f_{SCL} = 3.4 MHz
		0	—	150	ns	C_b = 400 pF, f_{SCL} = 1.7 MHz
Output valid from clock **(Notes 2 and 3)**	T_{AA}	—	—	150	ns	C_b = 100 pF, f_{SCL} = 3.4 MHz
		—	—	310	ns	C_b = 400 pF, f_{SCL} = 1.7 MHz
START condition hold time	$T_{HD:STA}$	160	—	—	ns	After this period, the first clock pulse is generated
START (Repeated) condition setup time	$T_{SU:STA}$	160	—	—	ns	
Data input setup time	$T_{SU:DAT}$	10	—	—	ns	
STOP condition setup time	$T_{SU:STO}$	160	—	—	ns	

Note 1: This parameter is ensured by characterization and not 100% tested.

2: This specification is not a part of the I²C specification. This specification is equivalent to the Data Hold Time ($T_{HD:DAT}$) plus SDA Fall (or rise) time: $T_{AA} = T_{HD:DAT} + T_F$ (OR T_R).

3: If this parameter is too short, it can create an unintended Start or Stop condition to other devices on the bus line. If this parameter is too long, Clock Low time (T_{LOW}) can be affected.

4: For Data Input: If this parameter is too long, the Data Input Setup ($T_{SU:DAT}$) or Clock Low time (T_{LOW}) can be affected. For Data Output: This parameter is characterized, and tested indirectly by testing T_{AA} parameter.

© 2009 Microchip Technology Inc.

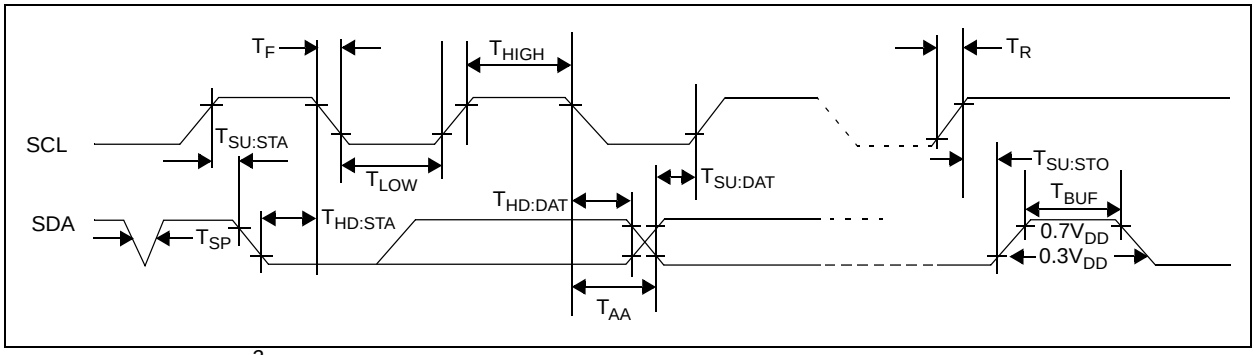

FIGURE 5-8: *I^2C Bus Timing Data.*

NOTES:

© 2009 Microchip Technology Inc.

6.0 BASIC APPLICATION CONFIGURATION

The MCP3422/3/4 devices can be used for various precision analog-to-digital converter applications. These devices operate with very simple connections to the application circuit. The following sections discuss the examples of the device connections and applications.

6.1 Connecting to the Application Circuits

6.1.1 BYPASS CAPACITORS ON V_{DD} PIN

For an accurate measurement, the application circuit needs a clean supply voltage and must block any noise signal to the MCP3422/3/4 devices. Figure 6-1 shows an example of using two bypass capacitors (a 10 µF tantalum capacitor and a 0.1 µF ceramic capacitor) on the V_{DD} line of the MCP3424. These capacitors are helpful to filter out any high frequency noises on the V_{DD} line and also provide the momentary bursts of extra currents when the device needs from the supply. These capacitors should be placed as close to the V_{DD} pin as possible (within one inch). If the application circuit has separate digital and analog power supplies, the V_{DD} and V_{SS} of the MCP3422/3/4 devices should reside on the analog plane.

6.1.2 CONNECTING TO I²C BUS USING PULL-UP RESISTORS

The SCL and SDA pins of the MCP3422/3/4 are open-drain configurations. These pins require a pull-up resistor as shown in Figure 6-1. The value of these pull-up resistors depends on the operating speed (standard, fast, and high speed) and loading capacitance of the I²C bus line. Higher value of pull-up resistor consumes less power, but increases the signal transition time (higher RC time constant) on the bus. Therefore, it can limit the bus operating speed. The lower value of resistor, on the other hand, consumes higher power, but allows higher operating speed. If the bus line has higher capacitance due to long bus line or high number of devices connected to the bus, a smaller pull-up resistor is needed to compensate the long RC time constant. The pull-up resistor is typically chosen between 5 kΩ and 10 kΩ ranges for standard and fast modes, and less than 1 kΩ for high speed mode depending on the presence of bus loading capacitance.

6.1.3 I²C ADDRESS SELECTION PINS (MCP3423 AND MCP3424)

The user can tie the Adr0 and Adr1 pins to V_{SS}, V_{DD}, or left floating. See more details in **Section 5.3.2 "Device Address Bits (A2, A1, A0) and Address Selection Pins (MCP3423 and MCP3424)"**.

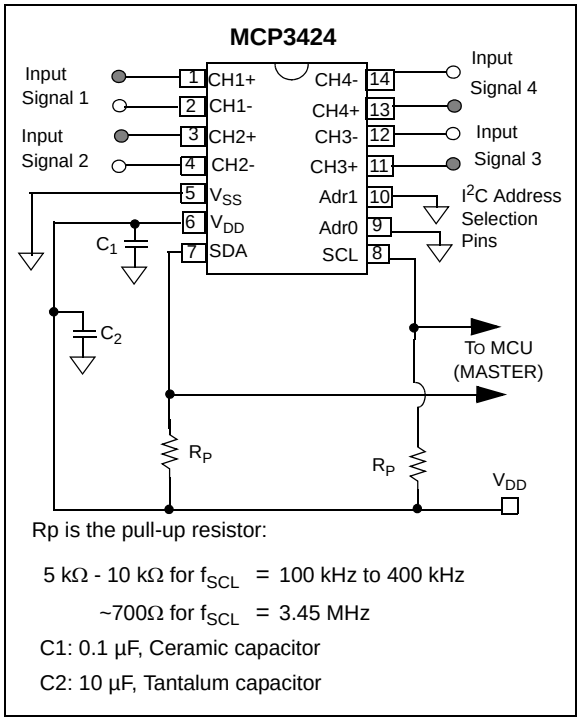

FIGURE 6-1: *Typical Connection.*

Figure 6-2 shows an example of multiple device connections. The I²C bus loading capacitance increases as the number of device connected to the I²C bus line increases. The bus loading capacitance affects on the bus operating speed. For example, the highest bus operating speed for the 400 pF bus capacitance is 1.7 MHz, and 3.4 MHz for 100 pF. Therefore, the user needs to consider the relationship between the maximum operation speed versus. the number of I²C devices that are connected to the I²C bus line.

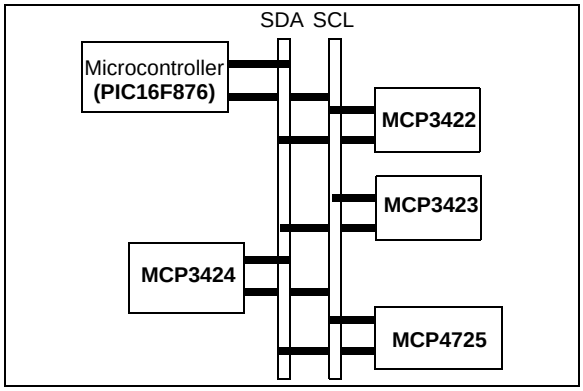

FIGURE 6-2: *Example of Multiple Device Connection on I²C Bus.*

6.1.4 DEVICE CONNECTION TEST

The user can test the presence of the MCP3422/3/4 on the I^2C bus line without performing an input data conversion. This test can be achieved by checking an acknowledge response from the MCP3422/3/4 after sending a read or write command. Here is an example using Figure 6-3:

a. Set the R/$\overline{W}$ bit “HIGH” in the address byte.

b. Check the ACK pulse after sending the address byte.

   If the device acknowledges (ACK = 0), then the device is connected, otherwise it is not connected.

c. Send STOP or START bit.

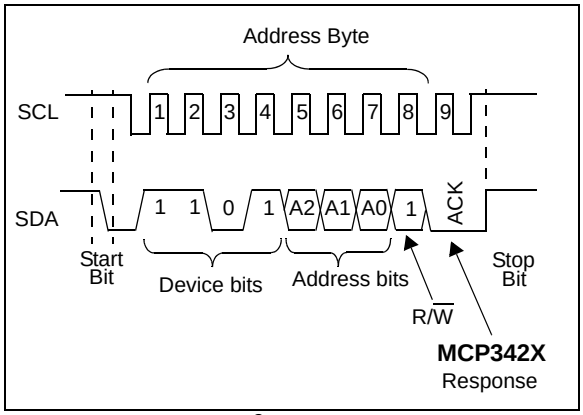

FIGURE 6-3: *I^2C Bus Connection Test.*

6.1.5 DIFFERENTIAL AND SINGLE-ENDED CONFIGURATION

Figure 6-4 shows typical connection examples for differential and single-ended inputs. Differential input signals can be connected to the CHn+ and CHn- input pins, where n = the channel number (1, 2, 3, or 4). For the single-ended input, the input signal is applied to one of the input pins (typically connected to the CHn+ pin) while the other input pin (typically CHn- pin) is grounded. All device characteristics hold for the single-ended configuration, but this configuration loses one bit resolution because the input can only stand in positive half scale. Refer to **Section 1.0 “Electrical Characteristics”**.

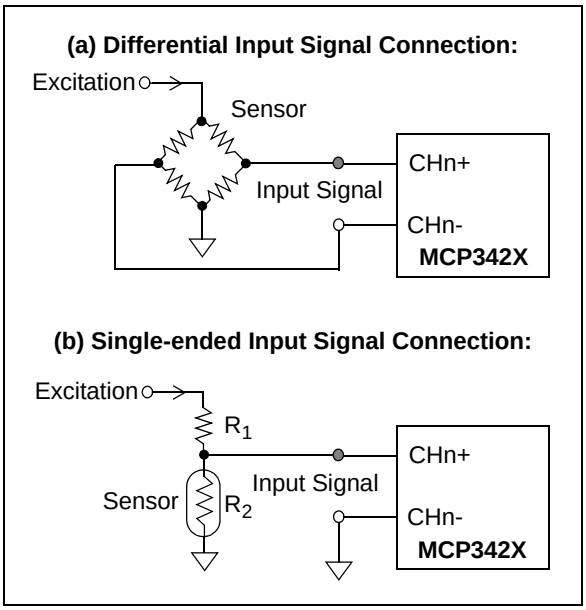

FIGURE 6-4: *Differential and Single-Ended Input Connections.*

© 2009 Microchip Technology Inc.

6.2 Application Examples

The MCP3422/3/4 devices can be used for broad ranges of sensor and data acquisition applications.

Figure 6-5 shows a circuit example measuring both the battery voltage and current using the MCP3422 device. Channels 1 and 2 are measuring the voltage and the current, respectively.

When the input voltage is greater than the internal reference voltage (V_{REF} = 2.048V), it needs a voltage divider circuit to prevent the output code from being saturated. In the example, R_1 and R_2 form a voltage divider. The R_1 and R_2 are set to yield V_{IN} to be less than the internal reference voltage (V_{REF} = 2.048V).

For the current measurement, the device measure the voltage across the current sensor, and converts it by dividing the measured voltage by a known resistance value. The voltage drops across the sensor is waste. Therefore, the current measurement often prefers to use a current sensor with smaller resistance value, which, in turn, requires high resolution ADC device.

The device can measure the input voltage as low as 2 µV range (or current in ~ µA range) with 18 bit resolution and PGA = 8 settings.

The MSB (= sign bit) of the output code determines the direction of the current, which identifies the charging or the discharging current.

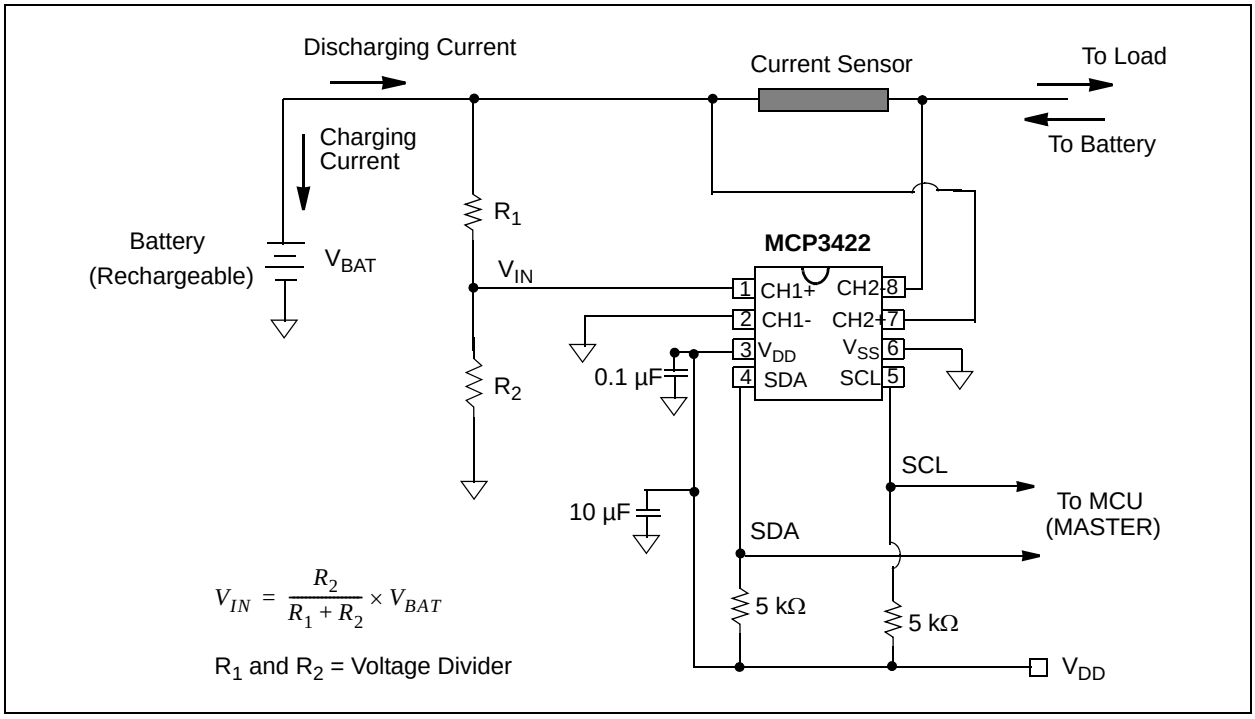

FIGURE 6-5: *Battery Voltage and Charging/Discharging Current Measurement.*

Figure 6-6, shows an example of using the MCP3424 for four-channel thermocouple temperature measurement applications.

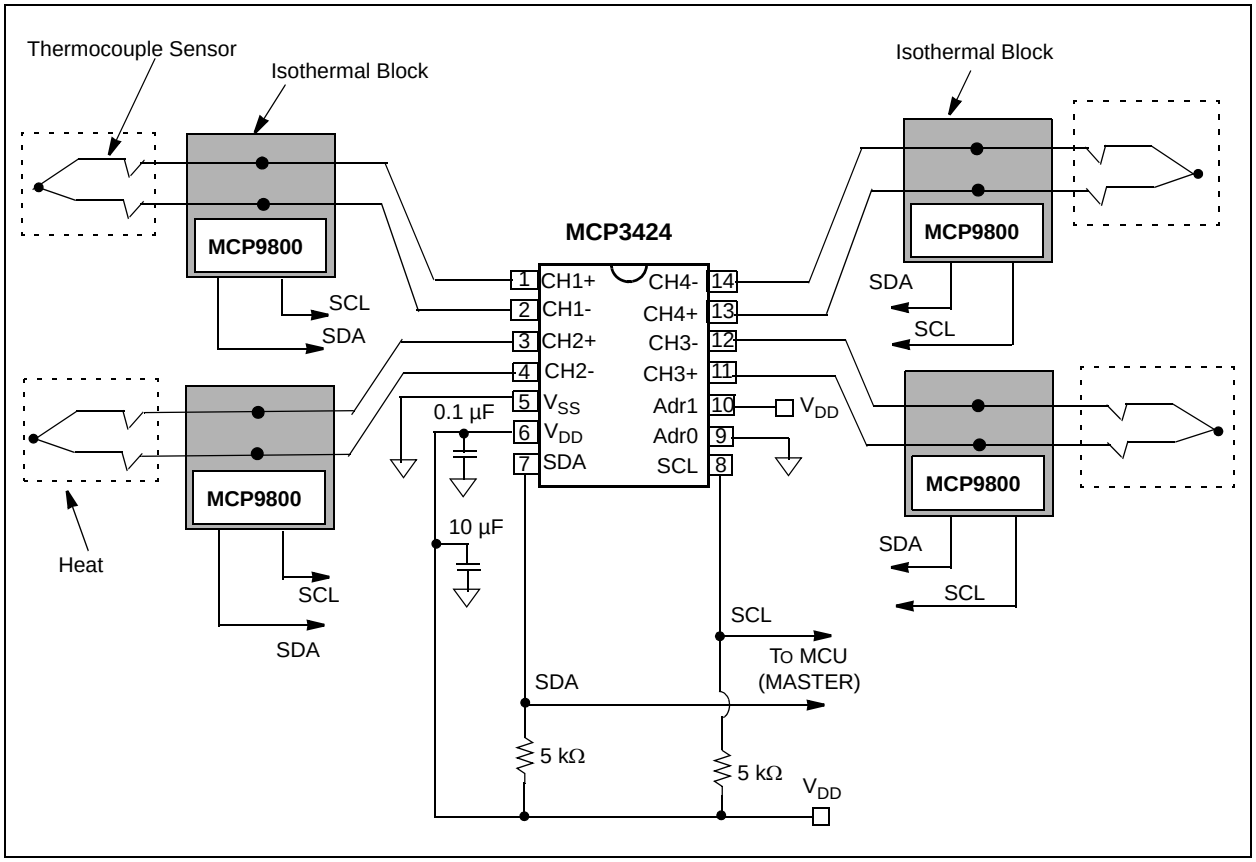

FIGURE 6-6: *Four-Channel Thermocouple Applications.*

With **Type K** thermocouple, it can measure temperature from 0°C to 1250°C degrees. The full scale output range of the **Type K** thermocouple is about 50 mV. This provides 40 µV/°C (= 50 mV/1250°C) of measurement resolution. Equation 6-1 shows the measurement budget for sensor signal using the MCP3422/3/4 device with 18 bits and PGA = 8 settings. With this configuration, the MCP3424 can detect the input signal level as low as approximately 2 µV. The internal PGA boosts the input signal level eight times. The 40 µV/°C input from the thermocouple is amplified internally to 320 µV/°C before the conversion takes place. This results in 20.48 LSB/°C output codes. This means there are about 20 LSB output codes (or about 4.32 bits) per 1°C of change in temperature.

EQUATION 6-1:

$$\text{Detectable Input Signal Level} = 15.625\,\mu V/PGA$$

$$= 1.953125\,\mu V \text{ for PGA} = 8$$

Input Signal Level after gain of 8:

$$= (40\,\mu V/°C) \bullet 8 = 320\,\mu V/°C$$

$$\text{No. of LSB}/°C = \frac{320\,\mu V/°C}{15.625\,\mu V} = 20.48 \text{ Codes}/°C$$

Where:

1 LSB = 15.625 µV with 18 bit configuration

© 2009 Microchip Technology Inc.

Equation 6-2 shows an example of calculating the expected number of output code with various PGA gain settings for **Type K** thermocouple output.

EQUATION 6-2: EXPECTED NUMBER OF OUTPUT CODE FOR TYPE K THERMOCOUPLE

Expected Number of Output Code = $log_2\left(\frac{\frac{50\ mV}{15.625\mu V}}{PGA}\right)$

= 11.6 bits for PGA = 1
= 12.6 bits for PGA = 2
= 13.6 bits for PGA = 4
= 14.6 bits for PGA = 8

Where:

1 LSB = 15.625 µV with 18 Bit configuration.

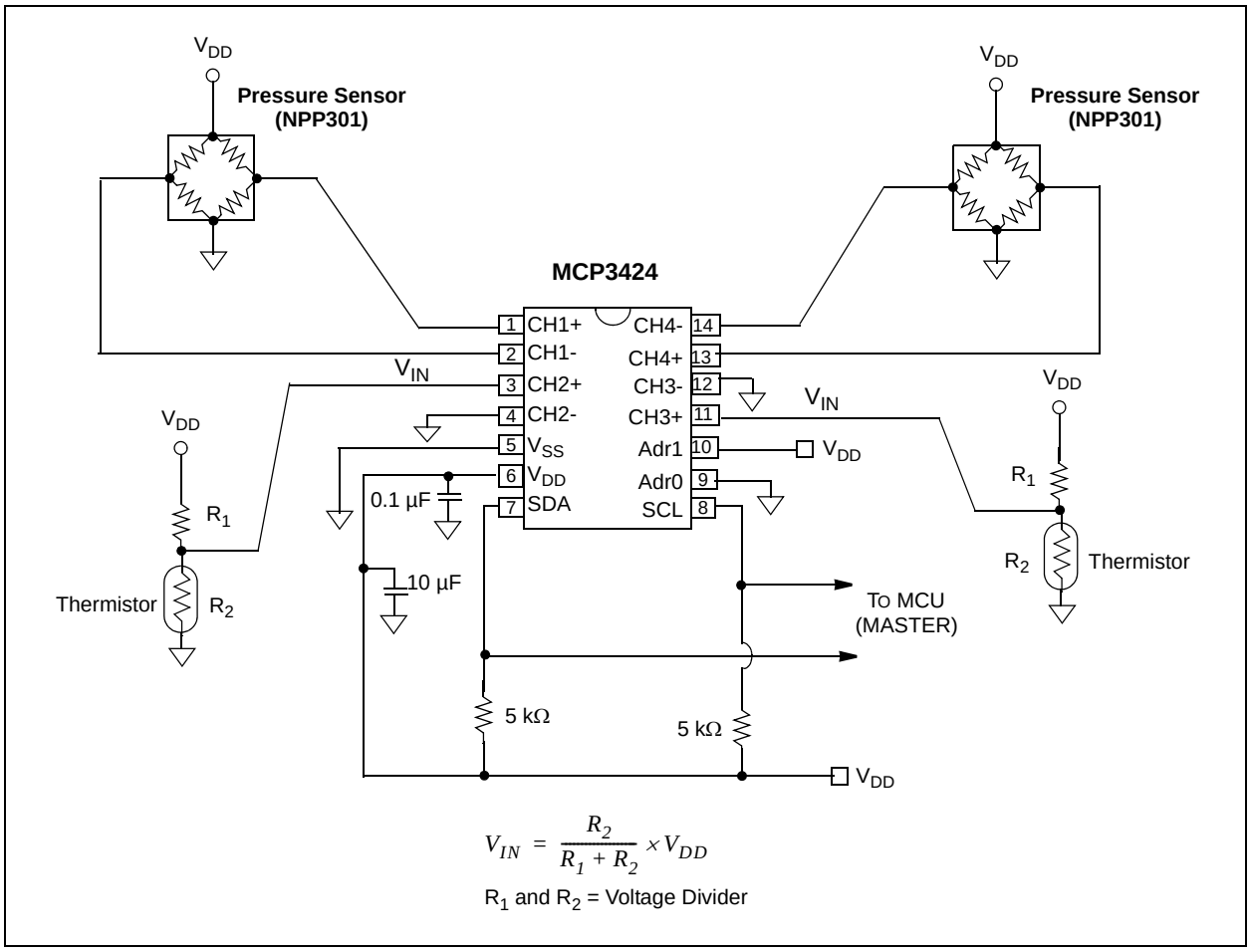

FIGURE 6-7: *Example of Pressure and Temperature Measurement.*

Figure 6-7 shows an example of measuring both pressure and temperature. The pressure is measured by using NPP 301 (manufactured by GE NovaSensor), and temperature is measured by a thermistor. The pressure sensor output is 20 mV/V. This gives 100 mV of full scale output for V_{DD} of 5V (sensor excitation voltage). Equation 6-3 shows an example of calculating the number of output code for the full scale output of the NPP301.

EQUATION 6-3: EXPECTED NUMBER OF OUTPUT CODE FOR NPP301 PRESSURE SENSOR

Expected Number of Output Code = $log_2\left(\frac{\frac{100\ \ mV}{15.625\mu V}}{PGA}\right)$

= 12.64 bits for PGA = 1
= 13.64 bits for PGA = 2
= 14.64 bits for PGA = 4
= 15.64 bits for PGA = 8

Where:

1 LSB = 15.625 µV with 18 Bit configuration.

The thermistor temperature sensor can measure the temperature range from -100°C to 300°C. The resistance of the thermistor sensor decreases as temperature increases (negative temperature coefficient). As shown in Figure 6-7, the thermistor (R_2) forms a voltage divider with R_1.

The thermistor sensor is simple to use and widely used for the temperature measurement applications. It has both linear and non-linear responses over temperature range. R_1 is used to adjust the linear region of interest for measurement.

© 2009 Microchip Technology Inc.

7.0 DEVELOPMENT TOOL SUPPORT

7.1 MCP3422/3/4 Evaluation Boards

The Evaluation Boards for MCP3422/3/4 devices are available from Microchip Technology Inc. The boards work with Microchip's PICkit™ Serial Analyzer. The user can simply connect any sensing voltage to the input test pads of the board and read conversion codes using the easy-to-use PICkit™ Serial Analyzer. Refer to www.microchip.com for further information on this product's capabilities and availability.

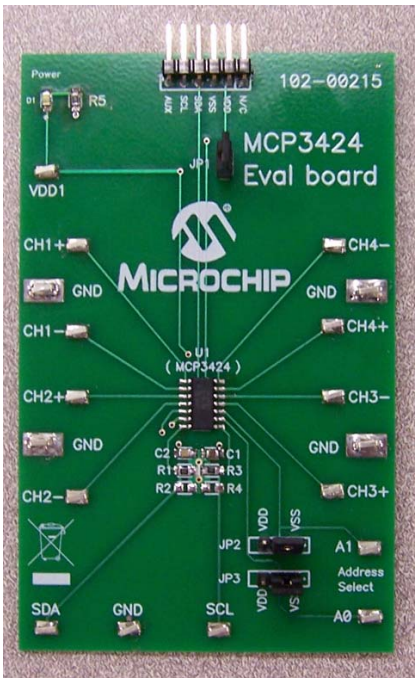

FIGURE 7-1: *MCP3424 Evaluation Board.*

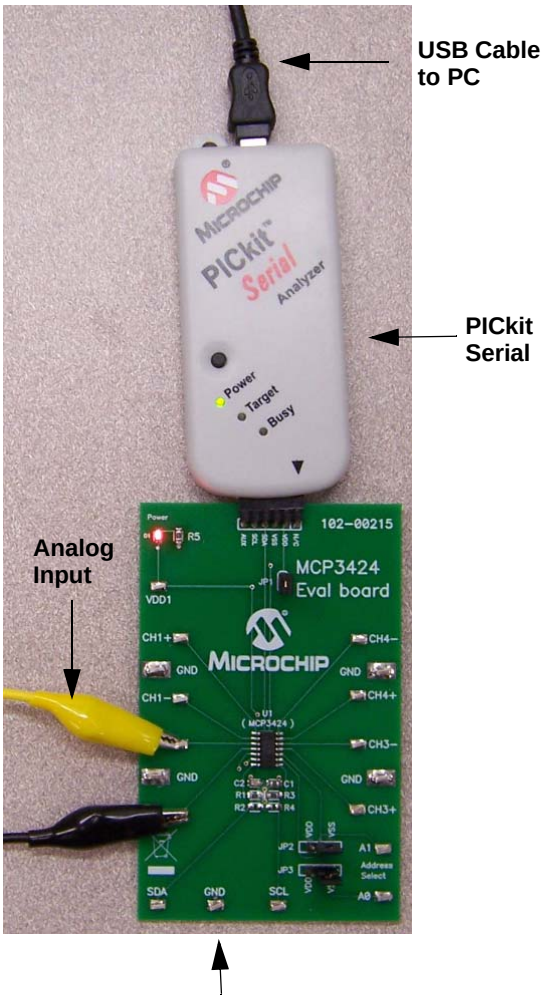

FIGURE 7-2: *Setup for the MCP3424 Evaluation Board with PICkit™ Serial Analyzer.*

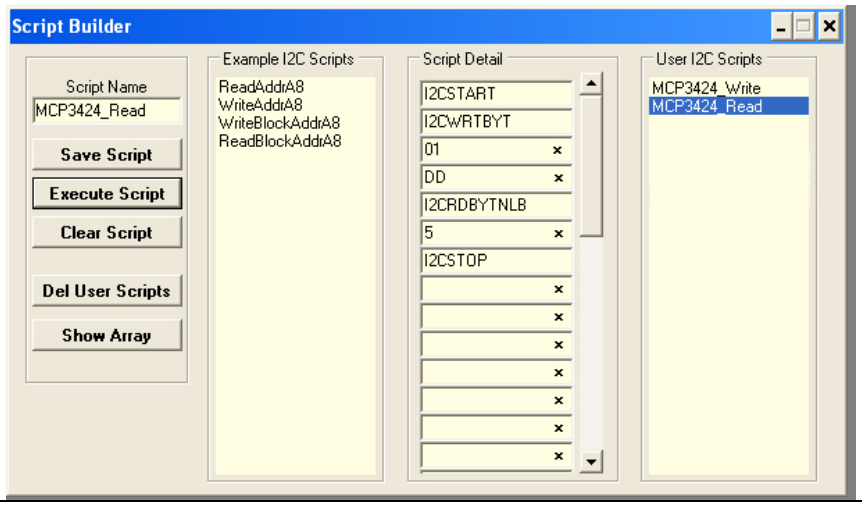

FIGURE 7-3: *Example of PICkit™ Serial User Interface.*

NOTES:

© 2009 Microchip Technology Inc.

8.0 PACKAGING INFORMATION

8.1 Package Marking Information

8-Lead DFN (2x3) **(MCP3422)**

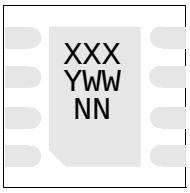

Example:

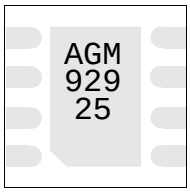

8-Lead MSOP **(MCP3422)**

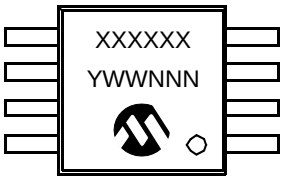

Example:

8-Lead SOIC (300 mil) **(MCP3422)**

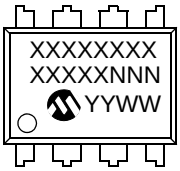

Example:

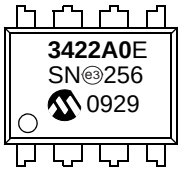

Legend:	XX...X	Customer-specific information
	Y	Year code (last digit of calendar year)
	YY	Year code (last 2 digits of calendar year)
	WW	Week code (week of January 1 is week ‘01’)
	NNN	Alphanumeric traceability code
	e3	Pb-free JEDEC designator for Matte Tin (Sn)
	*	This package is Pb-free. The Pb-free JEDEC designator (e3) can be found on the outer packaging for this package.

Note: In the event the full Microchip part number cannot be marked on one line, it will be carried over to the next line, thus limiting the number of available characters for customer-specific information.

Package Marking Information (Continued)

10-Lead DFN (3x3) **(MCP3423)**

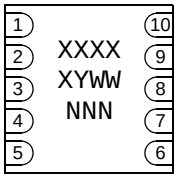

Example:

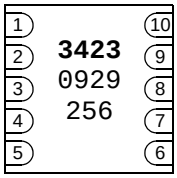

10-Lead MSOP **(MCP3423)**

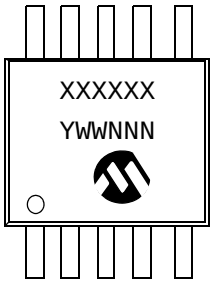

Example:

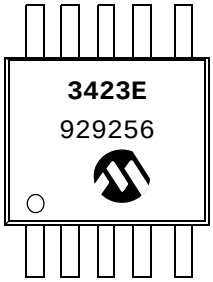

14-Lead SOIC (150 mil) **(MCP3424)**

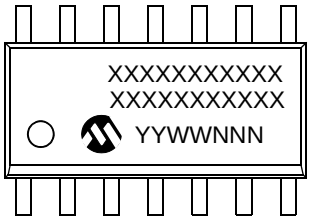

Example:

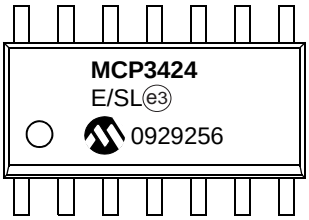

14-Lead TSSOP (4.4 mm) **(MCP3424)**

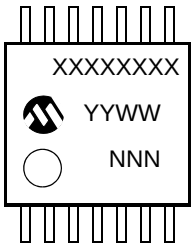

Example:

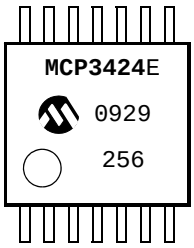

© 2009 Microchip Technology Inc.

8-Lead Plastic Dual Flat, No Lead Package (MC) – 2x3x0.9 mm Body [DFN]

Note: For the most current package drawings, please see the Microchip Packaging Specification located at http://www.microchip.com/packaging

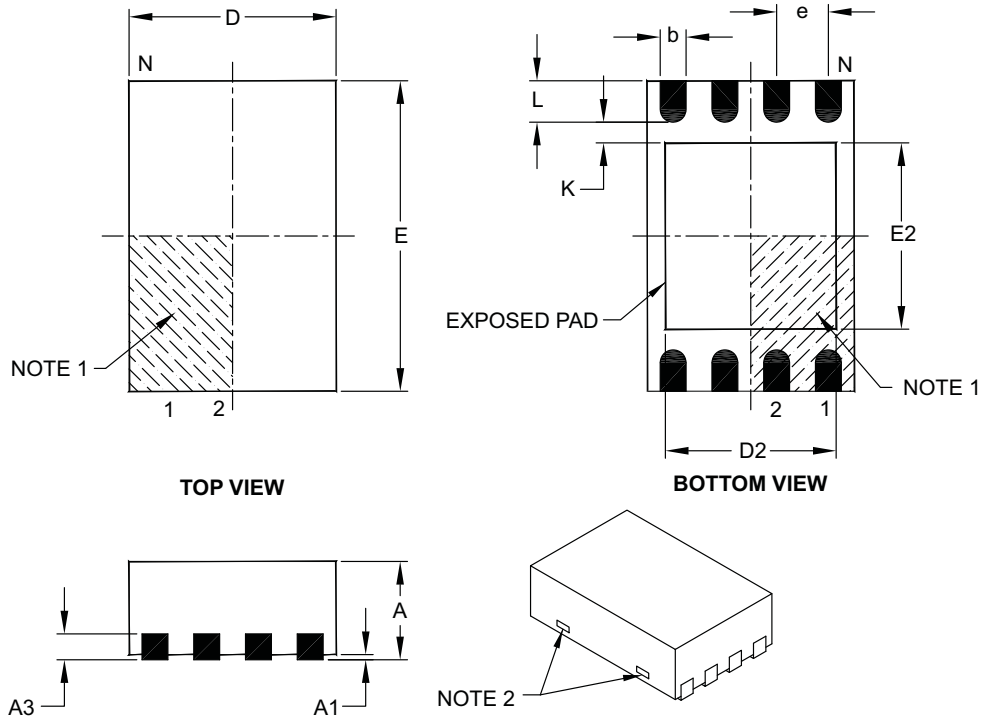

Units		MILLIMETERS		
Dimension Limits		MIN	NOM	MAX
Number of Pins	N	8		
Pitch	e	0.50 BSC		
Overall Height	A	0.80	0.90	1.00
Standoff	A1	0.00	0.02	0.05
Contact Thickness	A3	0.20 REF		
Overall Length	D	2.00 BSC		
Overall Width	E	3.00 BSC		
Exposed Pad Length	D2	1.30	–	1.55
Exposed Pad Width	E2	1.50	–	1.75
Contact Width	b	0.20	0.25	0.30
Contact Length	L	0.30	0.40	0.50
Contact-to-Exposed Pad	K	0.20	–	–

Notes:

1. Pin 1 visual index feature may vary, but must be located within the hatched area.
2. Package may have one or more exposed tie bars at ends.
3. Package is saw singulated.
4. Dimensioning and tolerancing per ASME Y14.5M.

   BSC: Basic Dimension. Theoretically exact value shown without tolerances.

   REF: Reference Dimension, usually without tolerance, for information purposes only.

Microchip Technology Drawing C04-123C

8-Lead Plastic Dual Flat, No Lead Package (MC) – 2x3x0.9 mm Body [DFN]

Note: For the most current package drawings, please see the Microchip Packaging Specification located at http://www.microchip.com/packaging

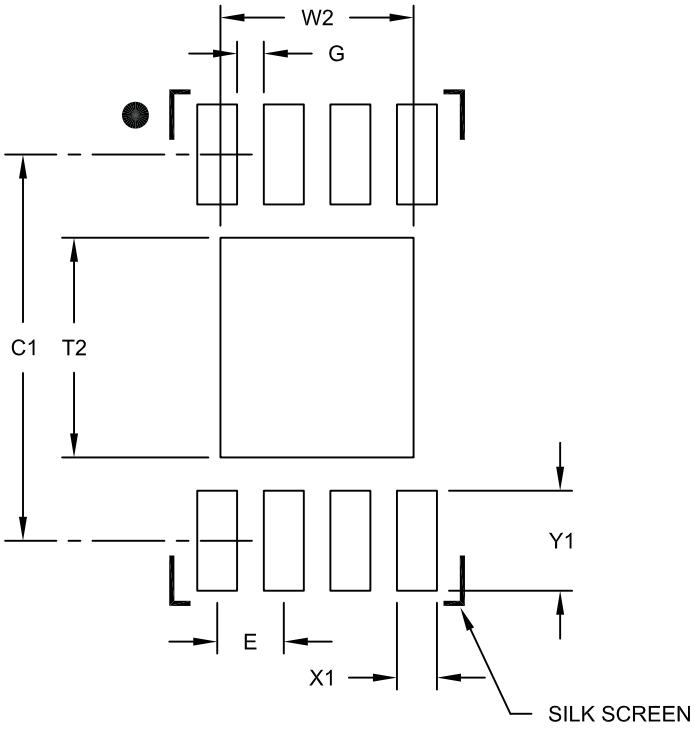

RECOMMENDED LAND PATTERN

Units		MILLIMETERS		
Dimension Limits		MIN	NOM	MAX
Contact Pitch	E	0.50 BSC		
Optional Center Pad Width	W2			1.45
Optional Center Pad Length	T2			1.75
Contact Pad Spacing	C1		2.90	
Contact Pad Width (X8)	X1			0.30
Contact Pad Length (X8)	Y1			0.75
Distance Between Pads	G	0.20		

Notes:

1. Dimensioning and tolerancing per ASME Y14.5M
   BSC: Basic Dimension. Theoretically exact value shown without tolerances.

Microchip Technology Drawing No. C04-2123A

© 2009 Microchip Technology Inc.

8-Lead Plastic Micro Small Outline Package (MS) [MSOP]

Note: For the most current package drawings, please see the Microchip Packaging Specification located at http://www.microchip.com/packaging

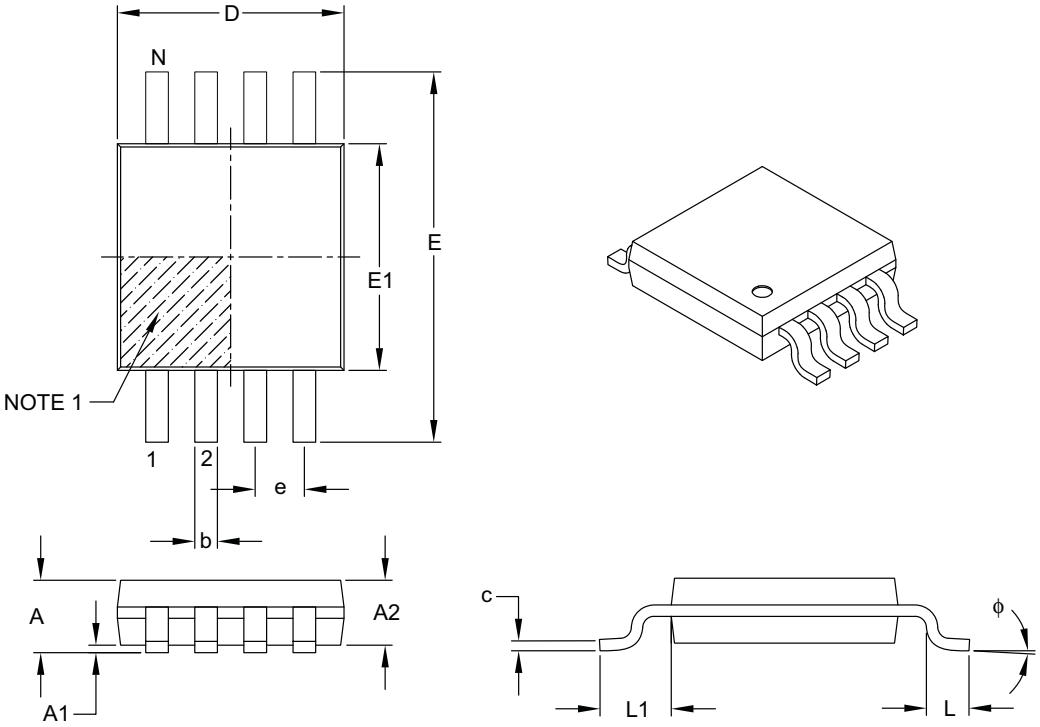

Units		MILLIMETERS		
Dimension Limits		MIN	NOM	MAX
Number of Pins	N	8		
Pitch	e	0.65 BSC		
Overall Height	A	–	–	1.10
Molded Package Thickness	A2	0.75	0.85	0.95
Standoff	A1	0.00	–	0.15
Overall Width	E	4.90 BSC		
Molded Package Width	E1	3.00 BSC		
Overall Length	D	3.00 BSC		
Foot Length	L	0.40	0.60	0.80
Footprint	L1	0.95 REF		
Foot Angle	ϕ	0°	–	8°
Lead Thickness	c	0.08	–	0.23
Lead Width	b	0.22	–	0.40

Notes:

1. Pin 1 visual index feature may vary, but must be located within the hatched area.
2. Dimensions D and E1 do not include mold flash or protrusions. Mold flash or protrusions shall not exceed 0.15 mm per side.
3. Dimensioning and tolerancing per ASME Y14.5M.

   BSC: Basic Dimension. Theoretically exact value shown without tolerances.

   REF: Reference Dimension, usually without tolerance, for information purposes only.

Microchip Technology Drawing C04-111B

8-Lead Plastic Small Outline (SN) – Narrow, 3.90 mm Body [SOIC]

Note: For the most current package drawings, please see the Microchip Packaging Specification located at http://www.microchip.com/packaging

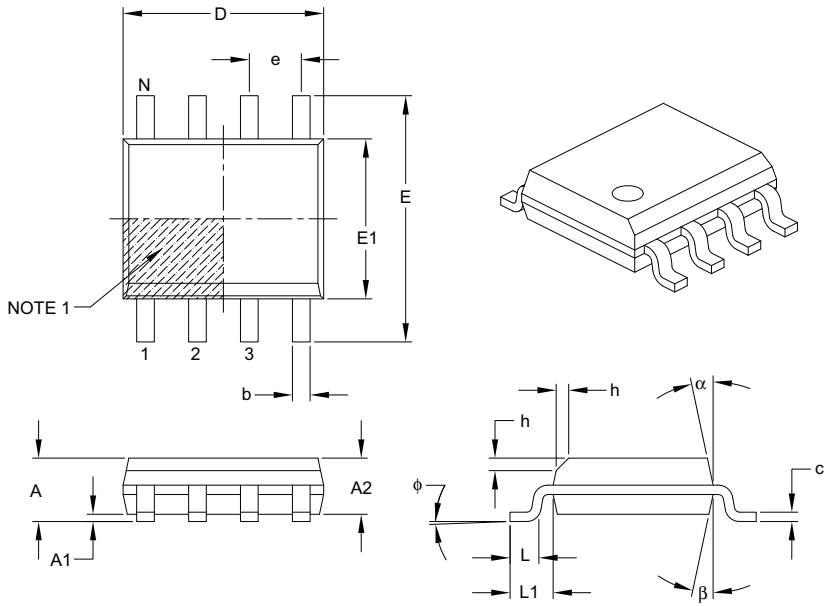

Units		MILLIMETERS		
Dimension Limits		MIN	NOM	MAX
Number of Pins	N	8		
Pitch	e	1.27 BSC		
Overall Height	A	–	–	1.75
Molded Package Thickness	A2	1.25	–	–
Standoff §	A1	0.10	–	0.25
Overall Width	E	6.00 BSC		
Molded Package Width	E1	3.90 BSC		
Overall Length	D	4.90 BSC		
Chamfer (optional)	h	0.25	–	0.50
Foot Length	L	0.40	–	1.27
Footprint	L1	1.04 REF		
Foot Angle	φ	0°	–	8°
Lead Thickness	c	0.17	–	0.25
Lead Width	b	0.31	–	0.51
Mold Draft Angle Top	α	5°	–	15°
Mold Draft Angle Bottom	β	5°	–	15°

Notes:

1. Pin 1 visual index feature may vary, but must be located within the hatched area.
2. § Significant Characteristic.
3. Dimensions D and E1 do not include mold flash or protrusions. Mold flash or protrusions shall not exceed 0.15 mm per side.
4. Dimensioning and tolerancing per ASME Y14.5M.
   BSC: Basic Dimension. Theoretically exact value shown without tolerances.
   REF: Reference Dimension, usually without tolerance, for information purposes only.

Microchip Technology Drawing C04-057B

© 2009 Microchip Technology Inc.

8-Lead Plastic Small Outline (SN) – Narrow, 3.90 mm Body [SOIC]

Note: For the most current package drawings, please see the Microchip Packaging Specification located at http://www.microchip.com/packaging

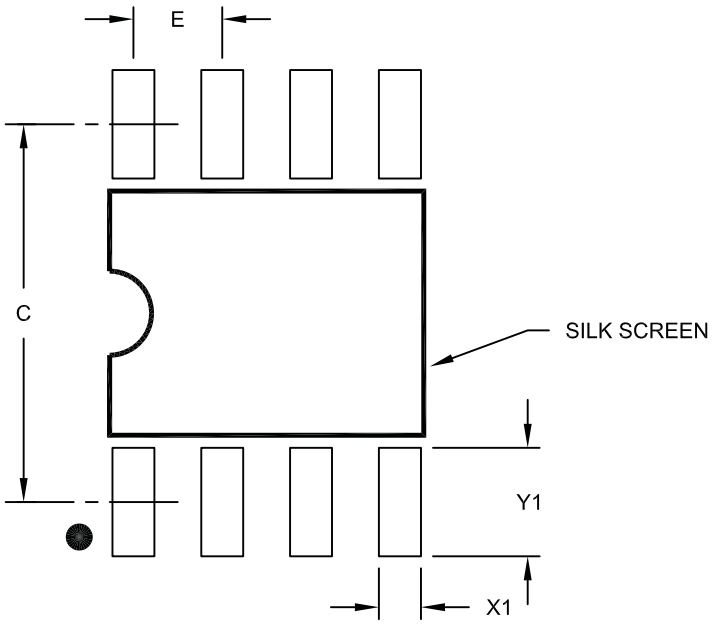

RECOMMENDED LAND PATTERN

Units		MILLIMETERS		
Dimension Limits		MIN	NOM	MAX
Contact Pitch	E	1.27 BSC		
Contact Pad Spacing	C		5.40	
Contact Pad Width (X8)	X1			0.60
Contact Pad Length (X8)	Y1			1.55

Notes:

1. Dimensioning and tolerancing per ASME Y14.5M
   BSC: Basic Dimension. Theoretically exact value shown without tolerances.

Microchip Technology Drawing No. C04-2057A

10-Lead Plastic Dual Flat, No Lead Package (MF) – 3x3x0.9 mm Body [DFN]

Note: For the most current package drawings, please see the Microchip Packaging Specification located at http://www.microchip.com/packaging

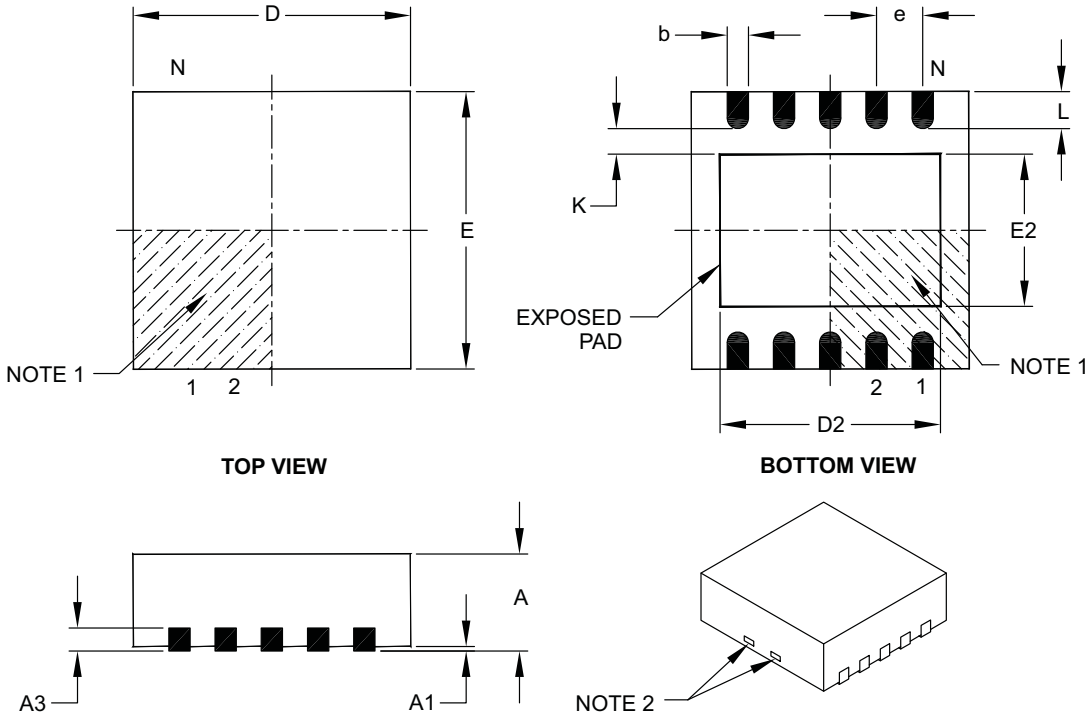

Units		MILLIMETERS		
Dimension Limits		MIN	NOM	MAX
Number of Pins	N	10		
Pitch	e	0.50 BSC		
Overall Height	A	0.80	0.90	1.00
Standoff	A1	0.00	0.02	0.05
Contact Thickness	A3	0.20 REF		
Overall Length	D	3.00 BSC		
Exposed Pad Length	D2	2.20	2.35	2.48
Overall Width	E	3.00 BSC		
Exposed Pad Width	E2	1.40	1.58	1.75
Contact Width	b	0.18	0.25	0.30
Contact Length	L	0.30	0.40	0.50
Contact-to-Exposed Pad	K	0.20	–	–

Notes:

1. Pin 1 visual index feature may vary, but must be located within the hatched area.
2. Package may have one or more exposed tie bars at ends.
3. Package is saw singulated.
4. Dimensioning and tolerancing per ASME Y14.5M.
   BSC: Basic Dimension. Theoretically exact value shown without tolerances.
   REF: Reference Dimension, usually without tolerance, for information purposes only.

Microchip Technology Drawing C04-063B

© 2009 Microchip Technology Inc.

10-Lead Plastic Dual Flat, No Lead Package (MF) – 3x3x0.9 mm Body [DFN]

Note: For the most current package drawings, please see the Microchip Packaging Specification located at http://www.microchip.com/packaging

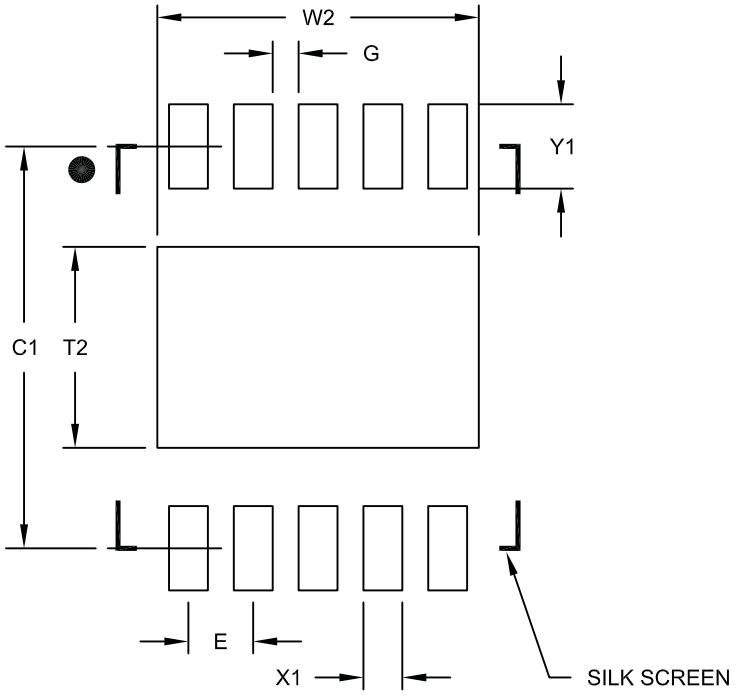

RECOMMENDED LAND PATTERN

Units		MILLIMETERS		
Dimension Limits		MIN	NOM	MAX
Contact Pitch	E		0.50 BSC	
Optional Center Pad Width	W2			2.48
Optional Center Pad Length	T2			1.55
Contact Pad Spacing	C1		3.10	
Contact Pad Width (X8)	X1			0.30
Contact Pad Length (X8)	Y1			0.65
Distance Between Pads	G	0.20		

Notes:

1. Dimensioning and tolerancing per ASME Y14.5M
   BSC: Basic Dimension. Theoretically exact value shown without tolerances.

Microchip Technology Drawing No. C04-2063A

10-Lead Plastic Micro Small Outline Package (UN) [MSOP]

Note: For the most current package drawings, please see the Microchip Packaging Specification located at http://www.microchip.com/packaging

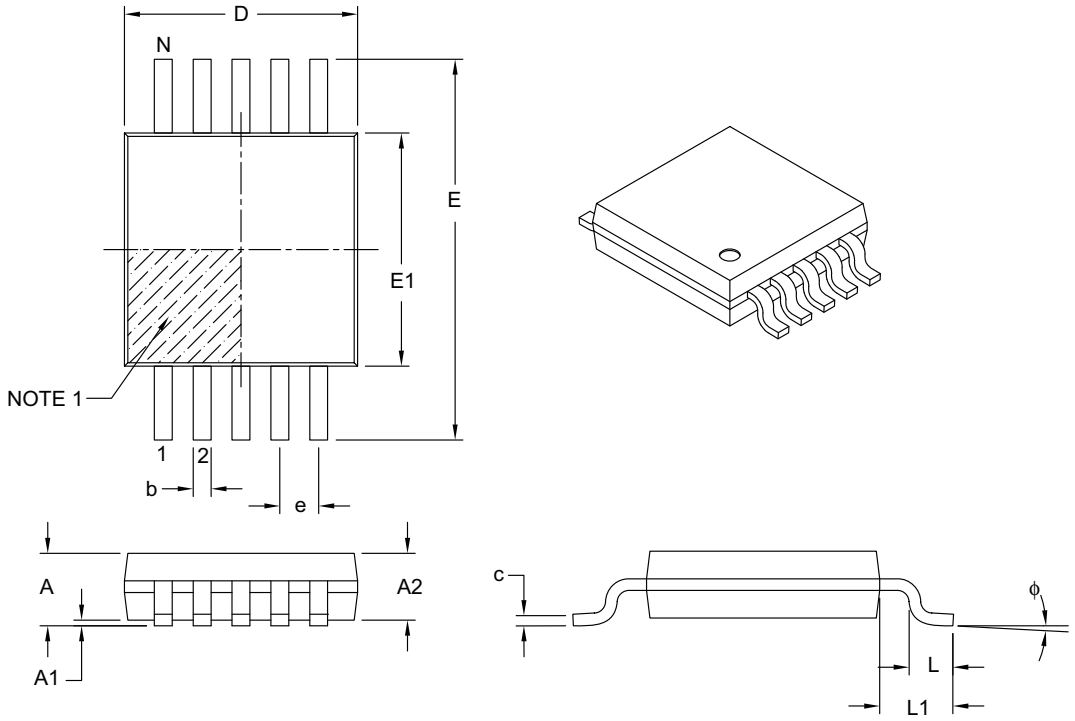

Units		MILLIMETERS		
Dimension Limits		MIN	NOM	MAX
Number of Pins	N	10		
Pitch	e	0.50 BSC		
Overall Height	A	–	–	1.10
Molded Package Thickness	A2	0.75	0.85	0.95
Standoff	A1	0.00	–	0.15
Overall Width	E	4.90 BSC		
Molded Package Width	E1	3.00 BSC		
Overall Length	D	3.00 BSC		
Foot Length	L	0.40	0.60	0.80
Footprint	L1	0.95 REF		
Foot Angle	ϕ	0°	–	8°
Lead Thickness	c	0.08	–	0.23
Lead Width	b	0.15	–	0.33

Notes:

1. Pin 1 visual index feature may vary, but must be located within the hatched area.
2. Dimensions D and E1 do not include mold flash or protrusions. Mold flash or protrusions shall not exceed 0.15 mm per side.
3. Dimensioning and tolerancing per ASME Y14.5M.

   BSC: Basic Dimension. Theoretically exact value shown without tolerances.
   REF: Reference Dimension, usually without tolerance, for information purposes only.

Microchip Technology Drawing C04-021B

© 2009 Microchip Technology Inc.

14-Lead Plastic Small Outline (SL) – Narrow, 3.90 mm Body [SOIC]

Note: For the most current package drawings, please see the Microchip Packaging Specification located at http://www.microchip.com/packaging

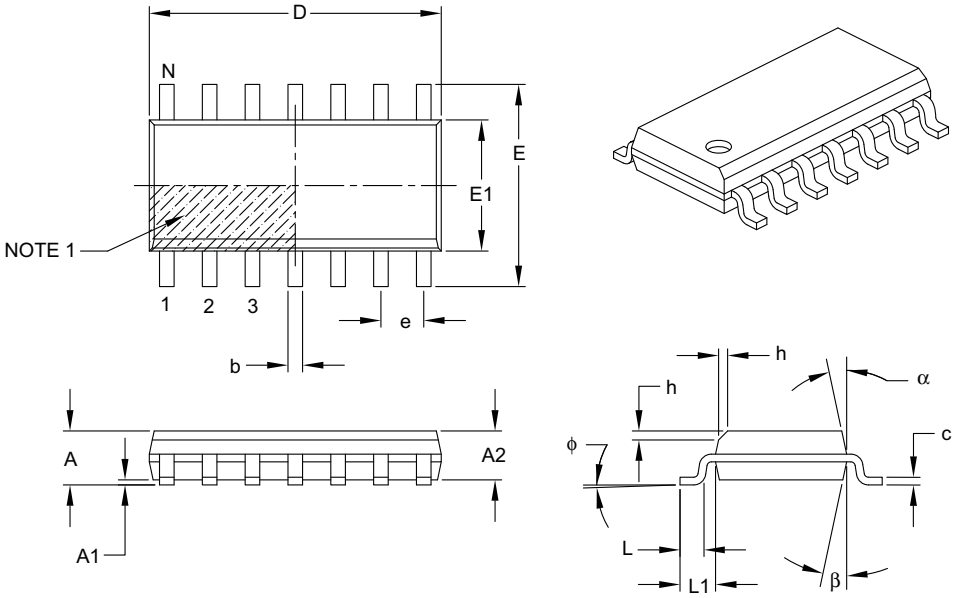

Units		MILLIMETERS		
Dimension Limits		MIN	NOM	MAX
Number of Pins	N	14		
Pitch	e	1.27 BSC		
Overall Height	A	–	–	1.75
Molded Package Thickness	A2	1.25	–	–
Standoff §	A1	0.10	–	0.25
Overall Width	E	6.00 BSC		
Molded Package Width	E1	3.90 BSC		
Overall Length	D	8.65 BSC		
Chamfer (optional)	h	0.25	–	0.50
Foot Length	L	0.40	–	1.27
Footprint	L1	1.04 REF		
Foot Angle	φ	0°	–	8°
Lead Thickness	c	0.17	–	0.25
Lead Width	b	0.31	–	0.51
Mold Draft Angle Top	α	5°	–	15°
Mold Draft Angle Bottom	β	5°	–	15°

Notes:

1. Pin 1 visual index feature may vary, but must be located within the hatched area.
2. § Significant Characteristic.
3. Dimensions D and E1 do not include mold flash or protrusions. Mold flash or protrusions shall not exceed 0.15 mm per side.
4. Dimensioning and tolerancing per ASME Y14.5M.

   BSC: Basic Dimension. Theoretically exact value shown without tolerances.
   REF: Reference Dimension, usually without tolerance, for information purposes only.

Microchip Technology Drawing C04-065B

14-Lead Plastic Small Outline (SL) - Narrow, 3.90 mm Body [SOIC]

Note: For the most current package drawings, please see the Microchip Packaging Specification located at http://www.microchip.com/packaging

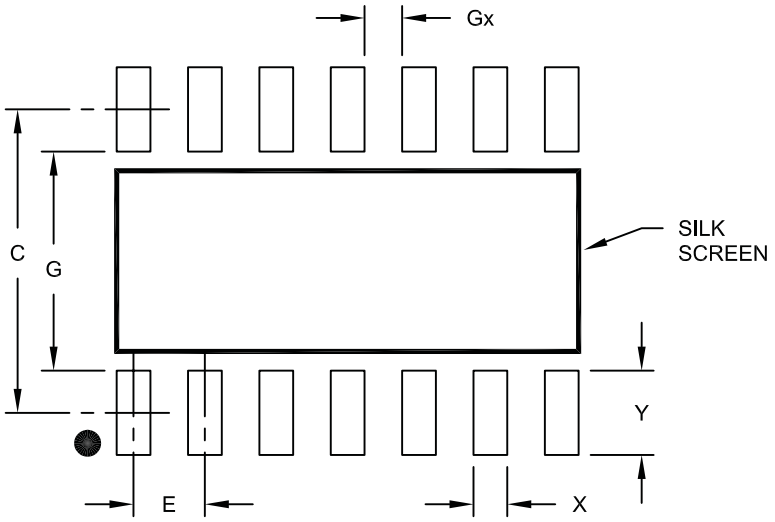

RECOMMENDED LAND PATTERN

Units		MILLIMETERS		
Dimension Limits		MIN	NOM	MAX
Contact Pitch	E		1.27 BSC	
Contact Pad Spacing	C		5.40	
Contact Pad Width	X			0.60
Contact Pad Length	Y			1.50
Distance Between Pads	Gx	0.67		
Distance Between Pads	G	3.90		

Notes:

1. Dimensioning and tolerancing per ASME Y14.5M

BSC: Basic Dimension. Theoretically exact value shown without tolerances.

Microchip Technology Drawing No. C04-2065A

© 2009 Microchip Technology Inc.

14-Lead Plastic Thin Shrink Small Outline (ST) – 4.4 mm Body [TSSOP]

Note: For the most current package drawings, please see the Microchip Packaging Specification located at http://www.microchip.com/packaging

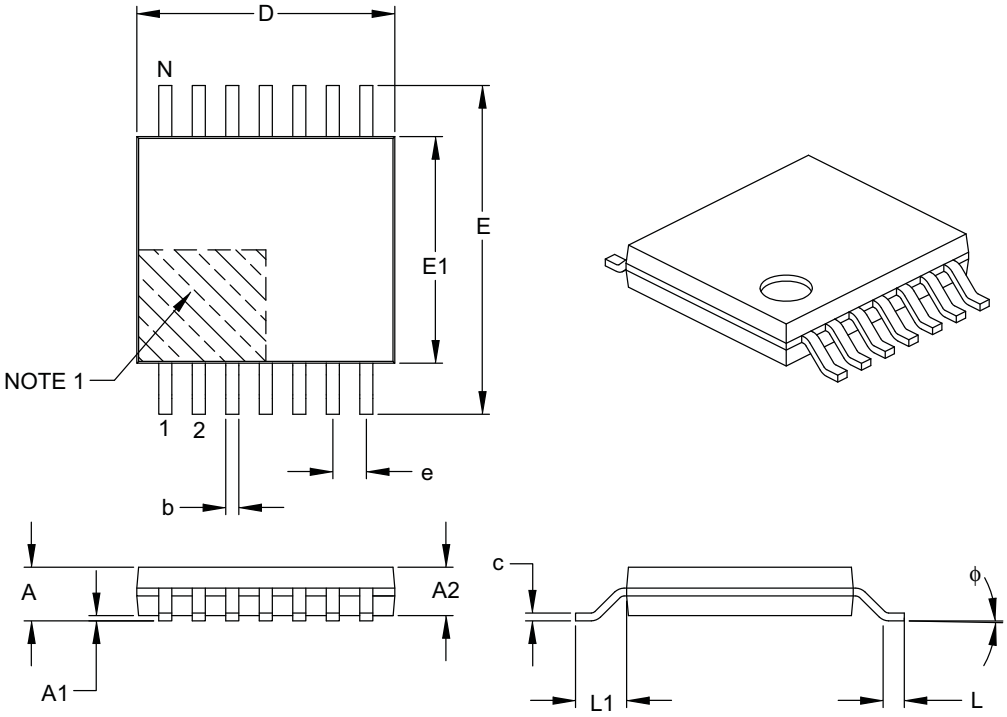

Units		MILLIMETERS		
Dimension Limits		MIN	NOM	MAX
Number of Pins	N	14		
Pitch	e	0.65 BSC		
Overall Height	A	–	–	1.20
Molded Package Thickness	A2	0.80	1.00	1.05
Standoff	A1	0.05	–	0.15
Overall Width	E	6.40 BSC		
Molded Package Width	E1	4.30	4.40	4.50
Molded Package Length	D	4.90	5.00	5.10
Foot Length	L	0.45	0.60	0.75
Footprint	L1	1.00 REF		
Foot Angle	ϕ	0°	–	8°
Lead Thickness	c	0.09	–	0.20
Lead Width	b	0.19	–	0.30

Notes:

1. Pin 1 visual index feature may vary, but must be located within the hatched area.
2. Dimensions D and E1 do not include mold flash or protrusions. Mold flash or protrusions shall not exceed 0.15 mm per side.
3. Dimensioning and tolerancing per ASME Y14.5M.

   BSC: Basic Dimension. Theoretically exact value shown without tolerances.
   REF: Reference Dimension, usually without tolerance, for information purposes only.

Microchip Technology Drawing C04-087B

NOTES:

© 2009 Microchip Technology Inc.

APPENDIX A: REVISION HISTORY

Revision C (August 2009)

The following is the list of modifications:

1. Updated the EDS protection parameters.
2. Updated the package marking information and package outline drawings.

Revision B (October 2008)

The following is the list of modifications:

1. Added MCP3422 and MCP3423 devices throughout this data sheet.
2. Added new package marking information and package outline drawings for MCP3422 and MCP3423 devices.
3. Added MCP3422 and MCP3423 devices to Product Identification System page.

Revision A (June 2008)

- Original Release of this Document.

NOTES:

© 2009 Microchip Technology Inc.

PRODUCT IDENTIFICATION SYSTEM

To order or obtain information, e.g., on pricing or delivery, refer to the factory or the listed sales office.

PART NO.	XX	X	X	/XX
Device	Address Options	Tape and Reel	Temperature Range	Package

Device:	MCP3422:	2-Channel 18-Bit ADC
	MCP3423:	2-Channel 18-Bit ADC
	MCP3424:	4-Channel 18-Bit ADC
Address Options:	XX =	Address Options. Refer to table below. For MCP3422 only.
Tape and Reel	T =	Tape and Reel
Temperature Range:	E =	-40°C to +125°C
Package:	MC =	Plastic Dual Flat, No Lead (2x3 DFN), 8-lead
	MF =	Plastic Dual Flat, No Lead (3x3 DFN) 10-lead
	MS =	Plastic Micro Small Outline (MSOP), 8-lead
	SL =	Plastic SOIC (150 mil Body), 14-lead
	SN =	Plastic SOIC (3.90mm Body), 8-lead,
	ST =	Plastic TSSOP (4.4mm Body), 14-lead
	UN =	Plastic Micro Small Outline (MSOP), 10-lead

Address Options for MCP3422:

Address Options			
* XX	A2	A1	A0
A0 * =	0	0	0
A1 =	0	0	1
A2 =	0	1	0
A3 =	0	1	1
A4 =	1	0	0
A5 =	1	0	1
A6 =	1	1	0
A7 =	1	1	1

* Default option. Contact Microchip factory for other address options.

Examples:

MCP3422

a) MCP3422A0-E/MC: 2-Channel ADC, A0 Address Option, 8LD DFN package.

b) MCP3422A0T-E/MC: Tape and Reel, 2-Channel ADC, A0 Address Option, 8LD DFN package.

c) MCP3422A0-E/MS: 2-Channel ADC, A0 Address Option, 8LD MSOP package.

d) MCP3422A0T-E/MS: Tape and Reel, 2-Channel ADC, A0 Address Option, 8LD MSOP package.

e) MCP3422A0-E/SN: 2-Channel ADC, A0 Address Option, 8LD SOIC package.

f) MCP3422A0T-E/SN: Tape and Reel, 2-Channel ADC, A0 Address Option, 8LD SOIC package.

MCP3423

a) MCP3423-E/MF: 2-Channel ADC, 10LD DFN package.

b) MCP3423T-E/MF: Tape and Reel, 2-Channel ADC, 10LD DFN package.

c) MCP3423-E/UN: 2-Channel ADC, 10LD MSOP pkg.

d) MCP3423T-E/UN: Tape and Reel, 2-Channel ADC, 10LD MSOP pkg.

MCP3424

a) MCP3424-E/SL: 4-Channel ADC, 14LD SOIC package.

b) MCP3424T-E/SL: Tape and Reel, 4-Channel ADC, 14LD SOIC package.

c) MCP3424-E/ST: 4-Channel ADC, 14LD TSSOP pkg.

d) MCP3424T-E/ST: Tape and Reel, 4-Channel ADC, 14LD TSSOP pkg.

NOTES:

© 2009 Microchip Technology Inc.

Note the following details of the code protection feature on Microchip devices:

- Microchip products meet the specification contained in their particular Microchip Data Sheet.
- Microchip believes that its family of products is one of the most secure families of its kind on the market today, when used in the intended manner and under normal conditions.
- There are dishonest and possibly illegal methods used to breach the code protection feature. All of these methods, to our knowledge, require using the Microchip products in a manner outside the operating specifications contained in Microchip's Data Sheets. Most likely, the person doing so is engaged in theft of intellectual property.
- Microchip is willing to work with the customer who is concerned about the integrity of their code.
- Neither Microchip nor any other semiconductor manufacturer can guarantee the security of their code. Code protection does not mean that we are guaranteeing the product as "unbreakable."

Code protection is constantly evolving. We at Microchip are committed to continuously improving the code protection features of our products. Attempts to break Microchip's code protection feature may be a violation of the Digital Millennium Copyright Act. If such acts allow unauthorized access to your software or other copyrighted work, you may have a right to sue for relief under that Act.

Information contained in this publication regarding device applications and the like is provided only for your convenience and may be superseded by updates. It is your responsibility to ensure that your application meets with your specifications. MICROCHIP MAKES NO REPRESENTATIONS OR WARRANTIES OF ANY KIND WHETHER EXPRESS OR IMPLIED, WRITTEN OR ORAL, STATUTORY OR OTHERWISE, RELATED TO THE INFORMATION, INCLUDING BUT NOT LIMITED TO ITS CONDITION, QUALITY, PERFORMANCE, MERCHANTABILITY OR FITNESS FOR PURPOSE**.** Microchip disclaims all liability arising from this information and its use. Use of Microchip devices in life support and/or safety applications is entirely at the buyer's risk, and the buyer agrees to defend, indemnify and hold harmless Microchip from any and all damages, claims, suits, or expenses resulting from such use. No licenses are conveyed, implicitly or otherwise, under any Microchip intellectual property rights.

Trademarks

The Microchip name and logo, the Microchip logo, dsPIC, KEELOQ, KEELOQ logo, MPLAB, PIC, PICmicro, PICSTART, rfPIC and UNI/O are registered trademarks of Microchip Technology Incorporated in the U.S.A. and other countries.

FilterLab, Hampshire, HI-TECH C, Linear Active Thermistor, MXDEV, MXLAB, SEEVAL and The Embedded Control Solutions Company are registered trademarks of Microchip Technology Incorporated in the U.S.A.

Analog-for-the-Digital Age, Application Maestro, CodeGuard, dsPICDEM, dsPICDEM.net, dsPICworks, dsSPEAK, ECAN, ECONOMONITOR, FanSense, HI-TIDE, In-Circuit Serial Programming, ICSP, ICEPIC, Mindi, MiWi, MPASM, MPLAB Certified logo, MPLIB, MPLINK, mTouch, Omniscient Code Generation, PICC, PICC-18, PICkit, PICDEM, PICDEM.net, PICtail, PIC^{32} logo, REAL ICE, rfLAB, Select Mode, Total Endurance, TSHARC, WiperLock and ZENA are trademarks of Microchip Technology Incorporated in the U.S.A. and other countries.

SQTP is a service mark of Microchip Technology Incorporated in the U.S.A.

All other trademarks mentioned herein are property of their respective companies.

© 2009, Microchip Technology Incorporated, Printed in the U.S.A., All Rights Reserved.

Printed on recycled paper.

QUALITY MANAGEMENT SYSTEM
CERTIFIED BY DNV
ISO/TS 16949:2002

Microchip received ISO/TS-16949:2002 certification for its worldwide headquarters, design and wafer fabrication facilities in Chandler and Tempe, Arizona; Gresham, Oregon and design centers in California and India. The Company's quality system processes and procedures are for its PIC® MCUs and dsPIC® DSCs, KEELOQ® code hopping devices, Serial EEPROMs, microperipherals, nonvolatile memory and analog products. In addition, Microchip's quality system for the design and manufacture of development systems is ISO 9001:2000 certified.

WORLDWIDE SALES AND SERVICE

AMERICAS

Corporate Office
2355 West Chandler Blvd.
Chandler, AZ 85224-6199
Tel: 480-792-7200
Fax: 480-792-7277
Technical Support:
http://support.microchip.com
Web Address:
www.microchip.com

Atlanta
Duluth, GA
Tel: 678-957-9614
Fax: 678-957-1455

Boston
Westborough, MA
Tel: 774-760-0087
Fax: 774-760-0088

Chicago
Itasca, IL
Tel: 630-285-0071
Fax: 630-285-0075

Cleveland
Independence, OH
Tel: 216-447-0464
Fax: 216-447-0643

Dallas
Addison, TX
Tel: 972-818-7423
Fax: 972-818-2924

Detroit
Farmington Hills, MI
Tel: 248-538-2250
Fax: 248-538-2260

Kokomo
Kokomo, IN
Tel: 765-864-8360
Fax: 765-864-8387

Los Angeles
Mission Viejo, CA
Tel: 949-462-9523
Fax: 949-462-9608

Santa Clara
Santa Clara, CA
Tel: 408-961-6444
Fax: 408-961-6445

Toronto
Mississauga, Ontario,
Canada
Tel: 905-673-0699
Fax: 905-673-6509

ASIA/PACIFIC

Asia Pacific Office
Suites 3707-14, 37th Floor
Tower 6, The Gateway
Harbour City, Kowloon
Hong Kong
Tel: 852-2401-1200
Fax: 852-2401-3431

Australia - Sydney
Tel: 61-2-9868-6733
Fax: 61-2-9868-6755

China - Beijing
Tel: 86-10-8528-2100
Fax: 86-10-8528-2104

China - Chengdu
Tel: 86-28-8665-5511
Fax: 86-28-8665-7889

China - Hong Kong SAR
Tel: 852-2401-1200
Fax: 852-2401-3431

China - Nanjing
Tel: 86-25-8473-2460
Fax: 86-25-8473-2470

China - Qingdao
Tel: 86-532-8502-7355
Fax: 86-532-8502-7205

China - Shanghai
Tel: 86-21-5407-5533
Fax: 86-21-5407-5066

China - Shenyang
Tel: 86-24-2334-2829
Fax: 86-24-2334-2393

China - Shenzhen
Tel: 86-755-8203-2660
Fax: 86-755-8203-1760

China - Wuhan
Tel: 86-27-5980-5300
Fax: 86-27-5980-5118

China - Xiamen
Tel: 86-592-2388138
Fax: 86-592-2388130

China - Xian
Tel: 86-29-8833-7252
Fax: 86-29-8833-7256

China - Zhuhai
Tel: 86-756-3210040
Fax: 86-756-3210049

ASIA/PACIFIC

India - Bangalore
Tel: 91-80-3090-4444
Fax: 91-80-3090-4080

India - New Delhi
Tel: 91-11-4160-8631
Fax: 91-11-4160-8632

India - Pune
Tel: 91-20-2566-1512
Fax: 91-20-2566-1513

Japan - Yokohama
Tel: 81-45-471- 6166
Fax: 81-45-471-6122

Korea - Daegu
Tel: 82-53-744-4301
Fax: 82-53-744-4302

Korea - Seoul
Tel: 82-2-554-7200
Fax: 82-2-558-5932 or
82-2-558-5934

Malaysia - Kuala Lumpur
Tel: 60-3-6201-9857
Fax: 60-3-6201-9859

Malaysia - Penang
Tel: 60-4-227-8870
Fax: 60-4-227-4068

Philippines - Manila
Tel: 63-2-634-9065
Fax: 63-2-634-9069

Singapore
Tel: 65-6334-8870
Fax: 65-6334-8850

Taiwan - Hsin Chu
Tel: 886-3-6578-300
Fax: 886-3-6578-370

Taiwan - Kaohsiung
Tel: 886-7-536-4818
Fax: 886-7-536-4803

Taiwan - Taipei
Tel: 886-2-2500-6610
Fax: 886-2-2508-0102

Thailand - Bangkok
Tel: 66-2-694-1351
Fax: 66-2-694-1350

EUROPE

Austria - Wels
Tel: 43-7242-2244-39
Fax: 43-7242-2244-393

Denmark - Copenhagen
Tel: 45-4450-2828
Fax: 45-4485-2829

France - Paris
Tel: 33-1-69-53-63-20
Fax: 33-1-69-30-90-79

Germany - Munich
Tel: 49-89-627-144-0
Fax: 49-89-627-144-44

Italy - Milan
Tel: 39-0331-742611
Fax: 39-0331-466781

Netherlands - Drunen
Tel: 31-416-690399
Fax: 31-416-690340

Spain - Madrid
Tel: 34-91-708-08-90
Fax: 34-91-708-08-91

UK - Wokingham
Tel: 44-118-921-5869
Fax: 44-118-921-5820

03/26/09

© 2009 Microchip Technology Inc.

Mouser Electronics

Authorized Distributor

Click to View Pricing, Inventory, Delivery & Lifecycle Information:

Microchip:
MCP3422A0-E/MC MCP3422A0-E/MS MCP3422A0-E/SN MCP3423-E/MF MCP3423-E/UN MCP3423T-E/UN MCP3424-E/SL MCP3424-E/ST MCP3424T-E/SL MCP3424T-E/ST