AY121 Lab 2: Calibration-First 21-cm Pipeline, Cable Characterization, and Provisional Results

Jun Rui Ting
March 2026

ABSTRACT

This report is reorganized into a calibration-first workflow: equipment calibration experiments, temperature calibration experiments, then calibrated HI measurement experiments. The document is intentionally structured for rapid revision when new measurements are added. All calibration-sensitive quantitative claims are represented with explicit placeholders (e.g., `TBD(CABLE_ALPHA_DB_PER_M)`, `TBD(LSR_SHIFT_KMS)`, `TBD(TRX_1420_K)`) rather than fixed final values. The current draft therefore serves as a method-complete and traceable report skeleton aligned with the Lab 2 requirements in `src/ugradio/lab_bighorn/bighorn.tex`, while remaining revision-ready for final data insertion.

1. Introduction and Requirement Mapping

This report follows the AY121 Lab 2 requirements in `src/ugradio/lab_bighorn/bighorn.tex`. The lab emphasizes nine competencies: (1) time conversion (UTC/PST/LST/JD), (2) coordinate transforms for pointing, (3) HI spectral measurement, (4) absolute calibration, (5) Doppler correction, (6) Gaussian fitting, (7) cable termination/impedance, (8) propagation velocity in coax, and (9) statistical plus systematic error analysis.

To match experiment dependencies, this draft is organized as:

1. equipment calibration experiments,
2. temperature calibration experiments,
3. HI measurement experiments and calibrated science outputs.

All analysis and writing are individual.

2. Receiver System and Data Inventory

The signal chain is: horn antenna → rooftop amplification/filtering → long coax downlink → lab amplification/filtering → RTL-SDR digitization/downconversion.

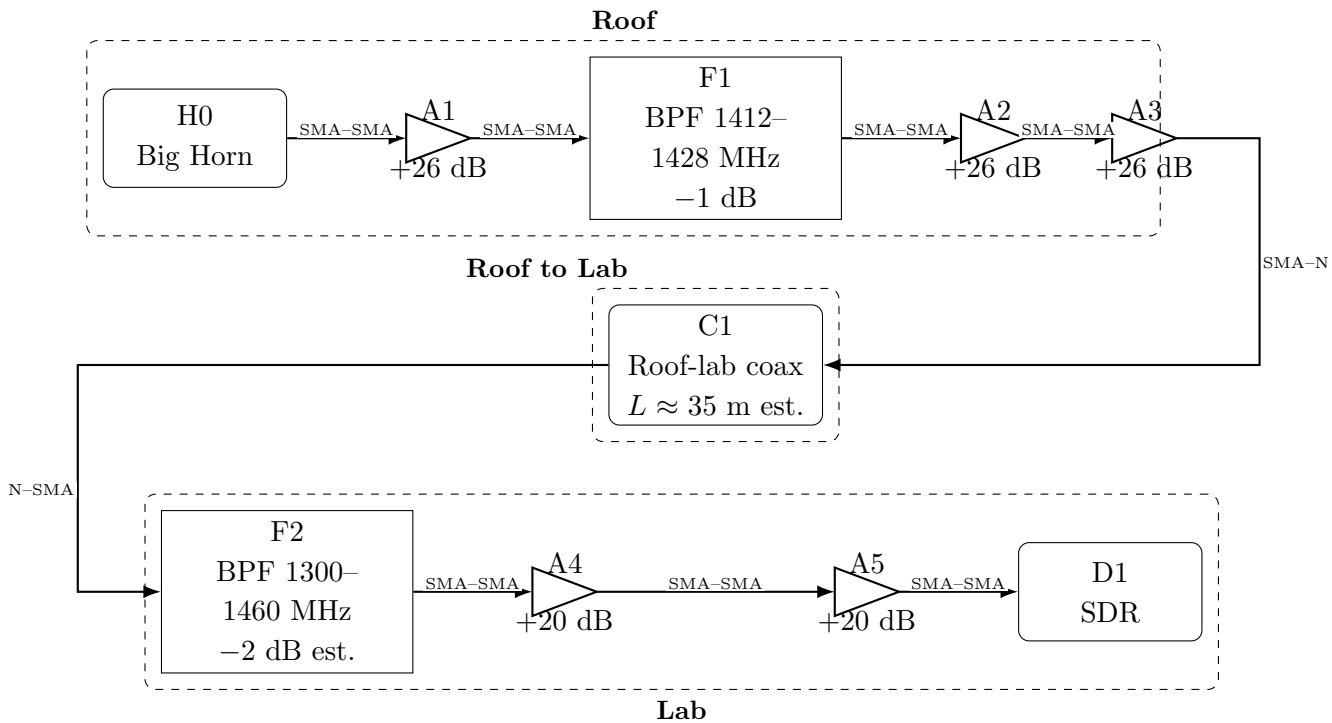

Fig. 1.— Master RF receiver chain used as the canonical scaffold for experiment-specific bench layouts, arranged as three centered section rows (Roof, Roof to Lab, Lab). Amplifiers are drawn with standard gain-triangle symbols; filters are shown as labeled RF blocks; connector transitions are annotated on the interconnects rather than drawn as separate blocks. Stage map (known manufacturer/part where available): A1/A2/A3 = Mini-Circuits ZKL-33ULN-S+ (rooftop, datasheet gain estimate $\sim$ +26 dB each); F1 = Reactel 1420-15S11 (passband $\sim$ 1412–1428 MHz, insertion-loss estimate $\sim$ 1 dB); F2 = K&L Microwave 5B120-1380/160-0 (passband $\sim$ 1300–1460 MHz, insertion-loss estimate $\sim$ 2 dB). A4/A5 are current bench amplifiers (nominally $\sim$ +20 dB each), and C1 is the roof-lab coax with prior length estimate $\sim$ 35 m.

Datasets currently available in this draft:

- HI dual-LO sky observations: `standard`, `cygnus-x`, `SGP`.
- Combined spectral products: `standard_combined_spectra`, `cygnus-x_combined_spectra`,

SGP_combined_spectra, human_combined_spectra.

- Cable attenuation study: data/lab02/attenuation (known lengths) and data/lab02/unknown_leng (unknown-length inference set).
- Report figures currently included are provisional and will be regenerated after data updates.

3. HI Acquisition Overview (Raw Observations)

Before calibration-specific analysis, raw observations were acquired with dual first-LO settings near 1420 and 1421 MHz to support frequency-switched line extraction. Current acquisition scripts are in labs/02/scripts, including: standard.py, cygnus-x.py, SGP.py, and human.py. Calibration support scripts now include attenuation_collect.py, unknown_length_collect.py, and sdr_gain_sweep.py. Legacy helpers anticenter.py and low-hi.py are deprecated and retained only for historical traceability.

For reproducibility, each capture stores metadata including sample rate, center frequency, gain, JD/LST, and pointing (alt/az). These metadata are used later for Doppler projection and frame correction.

3.1. Signal-Chain Sanity Checks Before Science Integrations

Before long integrations, the acquisition workflow includes the explicit Lab 2 sanity checks:

- tone-injection "birdie" verification (on/off, amplitude changes, and frequency stepping) to validate RF-to-bin mapping,
- sample histogram checks to verify non-clipped, non-quantized ADC behavior,
- gain/attenuator tuning to keep spectra in the linear regime.

Final insertion values: TBD(BIRDIE_FREQ_CHECK_SUMMARY), TBD(ADC_HISTOGRAM_SUMMARY), and TBD(GAIN_SETTING_RANGE_SUMMARY).

4. Time and Pointing Theory

This section summarizes the theoretical time-standard relations (UTC/PST/LST/JD) and coordinate transformations used for pointing. Residual benchmarking is intentionally omitted in this revision.

4.1. UTC/PST/LST/JD Conversion Relations

The timestamp pipeline is

$$\mathrm{PST} = \mathrm{UTC} - 8\ \mathrm{hr}, \tag{1}$$

$$\mathrm{PDT} = \mathrm{UTC} - 7\ \mathrm{hr}, \tag{2}$$

$$\mathrm{JD} = \mathrm{julian_date}(t_{\mathrm{unix}}), \tag{3}$$

$$\mathrm{LST} = \mathrm{lst}(\mathrm{JD}, \lambda_{\mathrm{obs}}), \tag{4}$$

with `ugradio.timing` as the primary implementation.

Table 1: Time-conversion theory terms used in this report.

Quantity	Expression/placeholder	Role in analysis
UTC↔PST	$\mathrm{PST} = \mathrm{UTC} - 8$ hr	Local timestamp interpretation
JD conversion	$\mathrm{JD} = \mathrm{julian_date}(t_{\mathrm{unix}})$	Absolute time reference
LST conversion	$\mathrm{LST} = \mathrm{lst}(\mathrm{JD}, \lambda_{\mathrm{obs}})$	Sidereal pointing phase
Clock sync status	`TBD(NTP_OFFSET_MS)`	Acquisition metadata quality flag

4.2. Rotation-Matrix Pointing Formulation

For a target with equatorial coordinates (α, δ), hour angle $H = \mathrm{LST} - \alpha$, and observatory latitude ϕ, we use direction cosines

$$\hat{n}_{\mathrm{eq}} = \begin{bmatrix} \cos\delta\cos\alpha \\ \cos\delta\sin\alpha \\ \sin\delta \end{bmatrix}, \tag{5}$$

and a rotation-matrix mapping to local horizontal coordinates

$$\hat{n}_{\mathrm{hor}} = R_y\left(\phi - \frac{\pi}{2}\right) R_z(H)\hat{n}_{\mathrm{eq}}. \tag{6}$$

The commanded horizontal coordinates are then

$$\mathrm{alt} = \arcsin(\hat{n}_{\mathrm{hor},z}), \qquad \mathrm{az} = \mathrm{atan2}(\hat{n}_{\mathrm{hor},y}, \hat{n}_{\mathrm{hor},x}). \tag{7}$$

For the required Week-2 target $(l, b) = (120°, 0°)$, the report provides the Galactic-to-equatorial conversion and resulting alt/az track.

The matrix pipeline is packaged in `ugradiolab.pointing` (`galactic_to_equatorial_matrix`, `equatorial_to_altaz_matrix`) and the operational acquisition path is integrated via `compute_pointing(.`

Table 2: Pointing-theory entries for the Week-2 target field.

Quantity	Expression/placeholder
Target equatorial coordinates from $(l, b) = (120°, 0°)$	`TBD(LB120_RA_DEC)`
Predicted alt/az track summary for observation windows	`TBD(LB120_ALT_AZ_TRACK)`
Maximum allowed pointing error used in analysis cuts	`TBD(POINTING_CUT_ARCMIN)`

5. Equipment Calibration Experiments

This section is placed first because all later science interpretation depends on receiver-chain and cable calibration. Detailed model variants and fitting internals are moved to Appendix B.

5.1. Termination and Reflectometry Plan

Required Week-2 termination diagnostics are handled as a separate analog campaign: open-end, 50 Ω terminated, SDR-connected-unpowered, and SDR-connected-powered states with square-wave reflectometry.

From those traces, this report will insert:

- reflection-delay measurements Δt with uncertainty,
- inferred propagation velocity in coax, $v_{\mathrm{coax}} =$ `TBD(VCOAX_M_PER_S)`,
- termination-quality comparison versus state and test frequency,
- SDR input impedance behavior summary (qualitative + quantitative).

5.2. Cable Loss Per Meter and Unknown-Length Inference

Using known-length attenuation sets, the primary shared-slope model is

$$y_{1420}(L) = B_{1420} - \alpha L, \tag{8}$$
$$y_{1421}(L) = B_{1421} - \alpha L, \tag{9}$$

where y is normalized receive power and L is known pre-split cable length.

Main-text provisional outputs:

- attenuation slope: $\alpha =$ `TBD(CABLE_ALPHA_DB_PER_M)`,
- slope uncertainty: $\sigma_\alpha =$ `TBD(CABLE_ALPHA_SIGMA_DB_PER_M)`,
- 95% interval: `TBD(CABLE_ALPHA_CI95)`,
- LO intercept difference: $\Delta B =$ `TBD(CABLE_DELTA_B_DB)`.

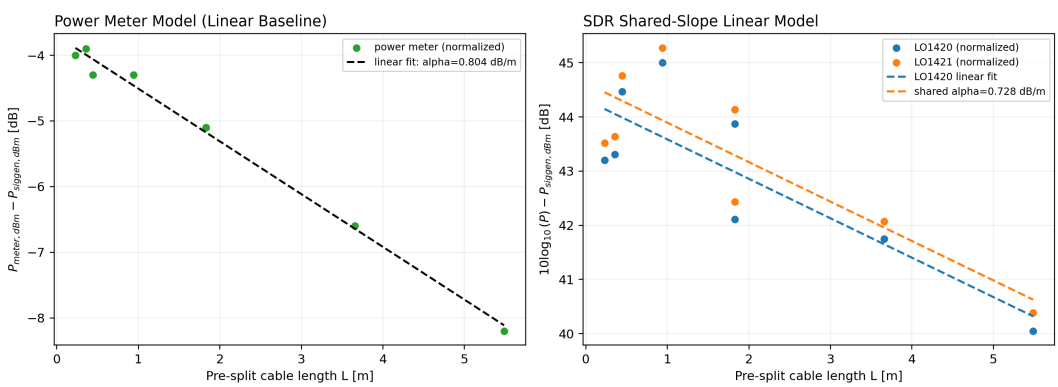

Fig. 2.— Provisional cable attenuation summary. Final slope and uncertainty values are pending updated calibration runs.

Unknown-length cable inference (from attenuation calibration transfer) is reported as:

$$L_{\text{unknown}} = \texttt{TBD(UNKNOWN_LENGTH_M)} \pm \texttt{TBD(UNKNOWN_LENGTH_SIGMA_M)}. \tag{10}$$

5.3. SDR Voltage Scale and Receiver-Chain Gain Inputs

The final report update will insert analog-calibrated SDR voltage scale and chain gain/loss terms:

- SDR voltage scale: `TBD(SDR_VOLT_SCALE_V_PER_COUNT)`,
- rooftop/lab amplifier gain entries: `TBD(AMP_GAIN_TABLE)`,
- filter insertion loss entries: `TBD(FILTER_LOSS_TABLE)`,
- roof cable effective length and corresponding attenuation contribution: `TBD(ROOF_CABLE_LENGTH_M)`, `TBD(ROOF_CABLE_LOSS_DB)`.

5.3.1. Power-Meter Voltage Cross-Check

For a matched 50Ω system, power-meter readings can be converted to an equivalent sinusoidal voltage scale:

$$P_{\mathrm{W}} = 10^{-3}\, 10^{P_{\mathrm{dBm}}/10}, \tag{11}$$

$$V_{\mathrm{rms}} = \sqrt{50\, P_{\mathrm{W}}}, \tag{12}$$

$$V_{\mathrm{pp}} = 2\sqrt{2}\, V_{\mathrm{rms}}. \tag{13}$$

This conversion is used only as a consistency cross-check on the SDR voltage calibration, not as the sole calibration path, because it assumes:

- valid 50Ω source/load matching at the measurement frequency,
- negligible reflection/VSWR error at the calibration point,
- waveform shape known well enough to map V_{rms} to V_{pp}.

5.3.2. Datasheet-Driven Chain Gains

Receiver-chain gains and losses are extracted from component datasheets rather than inferred from nominal block-diagram values alone. The current block diagram gives nominal stage targets (e.g., preamp stages near 26 dB and IF amplification near 20 dB), but final calibration tables in this report use exact part-number datasheet entries once component IDs are confirmed: the currently stored NPZ metadata and notebooks do not yet include rooftop/lab amplifier and filter part numbers, so these IDs must be logged explicitly at the bench for a complete datasheet table.

$$\text{chain gain}(\nu) = \sum_i G_i^{\mathrm{datasheet}}(\nu) - \sum_j L_j^{\mathrm{datasheet}}(\nu). \tag{14}$$

Final insertion item: `TBD(CHAIN_DATASHEET_TABLE_WITH_PART_NUMBERS)`.

6. Temperature Calibration Experiments

This section converts calibrated power observables into antenna/system temperature units.

6.1. Hot/Cold Calibration and Y-Factor Framework

Using hot-load and cold-reference spectra:

$$Y = \frac{P_{\rm hot}}{P_{\rm cold}}, \tag{15}$$

$$T_{\rm rx} = \frac{T_{\rm hot} - Y T_{\rm cold}}{Y - 1}. \tag{16}$$

Provisional per-LO outputs to be filled after revision:

- $Y_{1420} =$ `TBD(Y1420)`, $T_{\rm rx,1420} =$ `TBD(TRX_1420_K)`,
- $Y_{1421} =$ `TBD(Y1421)`, $T_{\rm rx,1421} =$ `TBD(TRX_1421_K)`,
- systematic terms: `TBD(TEMP_CAL_SYSTEMATICS_SUMMARY)`.

6.2. Temperature Scale Assumptions and Aperture-Efficiency Link

The conversion from antenna temperature to inferred brightness temperature is represented as

$$T_B = \frac{T_A}{\eta_{\rm ap}\,\eta_{\rm bf}}, \tag{17}$$

with provisional efficiency placeholders $\eta_{\rm ap} =$ `TBD(APERTURE_EFFICIENCY)` and $\eta_{\rm bf} =$ `TBD(BEAM_FILL_FACTO`

From currently available data, this report also estimates an effective combined efficiency

$$\eta_{\rm eff} \equiv \eta_{\rm ap}\eta_{\rm bf} = \frac{T_{A,\rm line,obs}}{T_{B,\rm line,ref}}. \tag{18}$$

Using `labs/02/scripts/estimate_eta_eff.py` and the output `labs/02/report/eta_eff_estimate.csv`, the provisional estimate is

$$\eta_{\rm eff} = 0.64 \pm 0.28\ (1\sigma), \qquad \eta_{\rm eff,95\%} \in [0.08,\ 1.19]. \tag{19}$$

This estimate is intentionally conservative and includes broad systematics (receiver-scale uncertainty, offline-baseline noise, and assumed reference brightness uncertainty for the $(l, b) = (120^\circ, 0^\circ)$ field).

7. HI Measurement Experiments and Calibrated Analysis

All science-facing HI results are presented only after equipment and temperature calibration context.

7.1. Week-1 First Measurement: SGP Cold-Sky Substitution

The handout asks for a first system-check line measurement at zenith. In this report, that check is intentionally replaced by a South Galactic Pole (SGP) cold-sky measurement as a documented deviation from the literal zenith instruction. The reason is calibration quality: for Berkeley, zenith can pass through low-$|b|$ Galactic emission windows during the sidereal day, while SGP is persistently low in HI column and therefore a cleaner $T_{\rm cold}$ reference.

The SGP is the direction of minimum HI column density ($N_{\rm HI} \lesssim 1.7 \times 10^{20}\,{\rm cm}^{-2}$, HI4PI survey), guaranteeing a nearly HI-free baseline spectrum regardless of LST and providing an unambiguous system-noise confirmation prior to the Week-2 science field.

Figure 3 shows the calibrated antenna temperature $T_A(\nu)$ for the SGP LO1420 combined observation (March 5, 2026, 12:35–12:50 PST; UTC 20:35–20:50; JD $\approx$ 2461105.3631; LST $\approx$ 23.47 h). The calibration applies the Y-factor result ($T_{\rm rx,1420} = 215.0 \pm 10.4\,{\rm K}$) and the frequency-dependent cold-reference profile from `calibration_results.npz`:

$$T_A(\nu) = P_{\rm obs}(\nu)\,\frac{T_{\rm cold} + T_{\rm rx}}{P_{\rm cold,ref}(\nu)} - T_{\rm rx}. \tag{20}$$

The LSR velocity correction for the SGP direction ($l = 0°$, $b = -90°$) at the time of observation is $\Delta v_{\rm LSR} \approx -7.02\,{\rm km\,s^{-1}}$, computed via `ugradio.doppler.get_projected_velocity`. No 21-cm HI emission line is detected anywhere in the spectrum, consistent with the near-zero column density expected at $b = -90°$. The continuum level near $T_A \approx T_{\rm cold} = 30\,{\rm K}$ confirms that the system is operating at the expected noise floor, validating the calibration chain before the main science observations.

Fig. 3.— Calibrated antenna temperature $T_A(\nu)$ for the SGP LO1420 combined spectrum, used as the Week-1 first system-check measurement in this report. No 21-cm HI emission line is detected, consistent with $b = -90°$ ($N_{\rm HI} \lesssim 1.7 \times 10^{20}\,{\rm cm}^{-2}$). The noise floor near $T_A \approx 30\,{\rm K}$ confirms the system calibration.

7.2. Week-2 Main Measurement: Galactic-Plane Field $(l, b) = (120°, 0°)$

The main Week-2 requirement is a fully calibrated HI spectrum at Galactic coordinates $(l, b) = (120°, 0°)$. This report treats that field as the primary science target and will explicitly report:

- observation interval in UTC/PST/JD/LST: `TBD(LB120_TIME_WINDOW)`,
- converted equatorial coordinates: `TBD(LB120_RA_DEC)`,
- topocentric and LSR spectra from the same calibrated pipeline,
- best-fit Gaussian component parameters with full uncertainties.

In this draft, the `standard` dataset is reserved for this target. The final revision will include the metadata table that demonstrates coordinate and time consistency end-to-end.

7.3. Frequency Switching and Line-Shape Extraction

From frequency-switched on/off spectra:

$$r_{\rm line}(\nu) = \frac{s_{\rm on}(\nu)}{s_{\rm off}(\nu)}. \tag{21}$$

Intensity-calibrated form:

$$T_{\rm line}(\nu) = r_{\rm line}(\nu)\, G, \tag{22}$$

with $G =$ `TBD(GAIN_K_PER_NORM_POWER)`.

Consistent with the lab instructions, stacked spectra are compared using both channel-wise means and medians before adopting a final estimator:

- mean stack output: `TBD(LINE_STACK_MEAN_SUMMARY)`,
- median stack output: `TBD(LINE_STACK_MEDIAN_SUMMARY)`,
- adopted smoothing width in channels: `TBD(LINE_SMOOTH_NCHAN)`.

The smoothing choice is constrained by the requirement not to wash out HI features narrower than about 1 km s^{-1}. Band-edge placement is also verified against FIR roll-off to avoid aliasing-sensitive channels; final evidence will be summarized by `TBD(FIR_EDGE_PLACEMENT_SUMMARY)`.

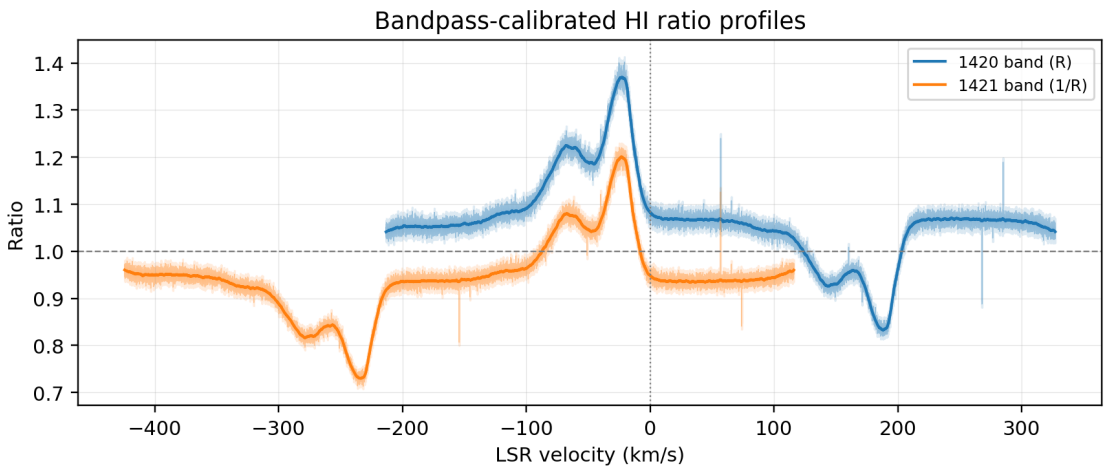

Fig. 4.— Provisional dual-LO ratio profile for the Week-2 target field $(l, b) = (120°, 0°)$. Final axis ranges and component annotations will be updated with revised data.

7.4. Velocity Axes and LSR Correction

Radio-definition Doppler mapping:

$$v \approx c\,\frac{\nu_0 - \nu}{\nu_0}, \tag{23}$$

with LSR correction

$$v_{\rm LSR} = v_{\rm topo} + \Delta v_{\rm LSR}, \tag{24}$$

where $\Delta v_{\rm LSR} =$ `TBD(LSR_SHIFT_KMS)` km s^{-1}.

7.5. Baseline Removal and Gaussian Decomposition

Baseline removal uses off-line channels and low-order polynomial (or equivalent) subtraction, followed by multi-component Gaussian fitting. The default off-line fitting windows are $[-1.2, -0.6]$ MHz and $[0.6, 1.2]$ MHz relative to line center, matching the Lab 2 guidance. The main implementation uses `np.polyfit` for baseline modeling and `gaussfit`/`gaussval` for component fits, with alternatives treated as sensitivity checks.

Main-text provisional science outputs:

- number of adopted components: `TBD(N_GAUSS_FINAL)`,
- component centroids (topocentric): `TBD(VTOPO_COMPONENTS_KMS)`,

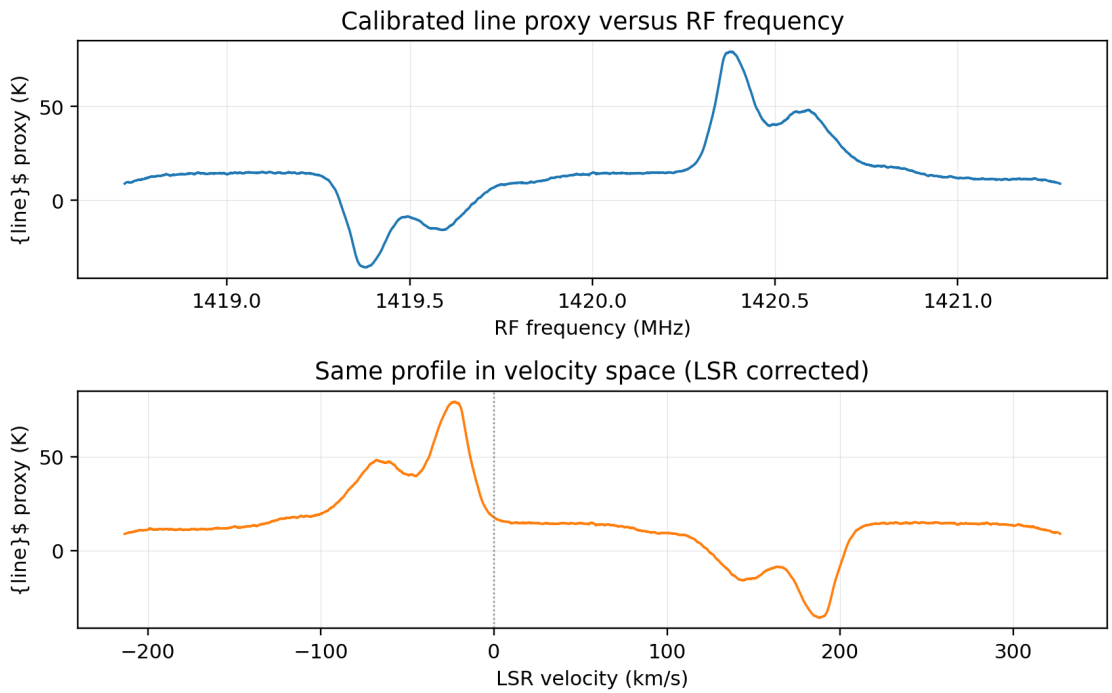

Fig. 5.— Provisional calibrated profile for the Week-2 target field $(l, b) = (120°, 0°)$ versus RF frequency and velocity coordinates (topocentric and LSR).

- component centroids (LSR): `TBD(VLSR_COMPONENTS_KMS)`,
- FWHM values: `TBD(FWHM_COMPONENTS_KMS)`,
- fit quality: $\chi^2_r =$ `TBD(CHI2_RED_FINAL)`.

Table 3: Provisional HI fit summary placeholders (to be replaced after next data revision).

Quantity	Placeholder	Notes
Component count	`TBD(N_GAUSS_FINAL)`	Model-selection outcome
LSR shift (km s^{-1})	`TBD(LSR_SHIFT_KMS)`	Doppler projection
Dominant component centers (km s^{-1})	`TBD(VLSR_COMPONENTS_KMS)`	Report with uncertainties
Reduced chi-square	`TBD(CHI2_RED_FINAL)`	Baseline+Gaussian fit quality

8. Unified Uncertainty Framework

Uncertainty accounting in this report combines:

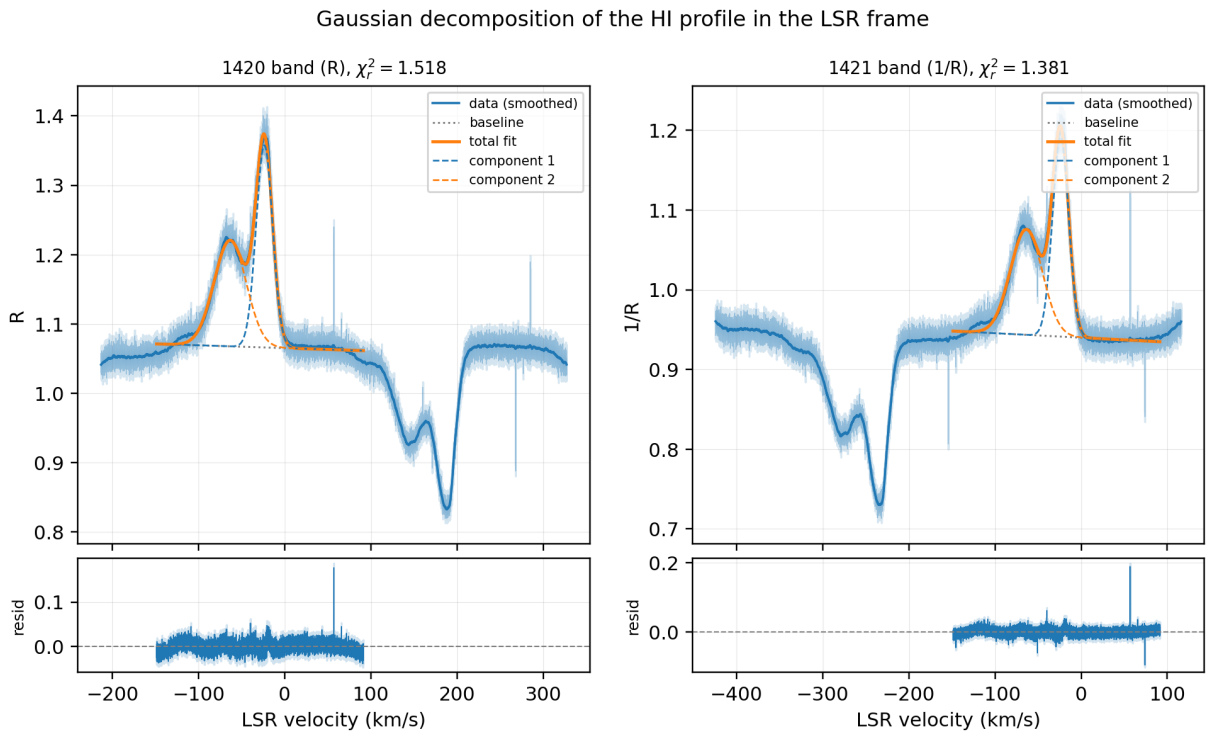

Fig. 6.— Provisional Gaussian decomposition panel. Final residual diagnostics and component labels pending revised data.

- per-channel thermal/statistical noise,
- baseline-removal model sensitivity,
- calibration transfer uncertainty (equipment + temperature),
- Doppler/frame-correction uncertainty,
- component-model selection uncertainty (least squares and optional MCMC variants).

9. Requirement Coverage Matrix

10. Discussion

This draft is now method-complete in calibration-first order and ready for a final data-insertion pass. The primary remaining blockers for strict end-state reporting are:

Table 4: Provisional uncertainty budget entries awaiting final values.

Term	Placeholder
Thermal channel noise level	`TBD(SIGMA_THERMAL_PER_CHANNEL)`
Baseline removal systematic	`TBD(SIGMA_BASELINE_SYS)`
Temperature-scale systematic	`TBD(SIGMA_TEMP_SCALE_SYS)`
Cable attenuation contribution	`TBD(SIGMA_CABLE_CAL_SYS)`
Gaussian parameter covariance term	`TBD(SIGMA_FIT_COV)`

Table 5: Direct map from Lab 2 goals in `bighorn.tex` to report evidence.

Goal	Evidence in this report	Final insertion target
Time (UTC/PST/LST/JD)	§4.1, Table 1	Document conversion equations and clock metadata
Pointing (rotation matrices)	§4.2, Table 2	Document matrix formulation and target track summary
HI measurement	§7.1, §7.2	Final calibrated spectra plus explicit SGP-for-zenith deviation note
Calibration (absolute scale)	§5, §6	Replace calibration placeholders
Doppler correction (LSR)	§7.4	Insert projected velocity and uncertainties
Gaussian fitting	§7.5, Table 3	Final component model + χ^2_r
Impedance/termination	§5.1	Waveform evidence by termination state
Propagation speed in coax	§5.1, §B.3	Final $v_{\rm coax}$ with error bars
Error analysis	§8	Combined statistical + systematic budget

1. final analog termination/reflectometry measurements,
2. exact receiver component part numbers and datasheet gain/loss table completion,
3. revised temperature-calibration numbers,
4. finalized UTC/PST/LST/JD and pointing theory tables,

5. final HI component and uncertainty summaries after data refresh.

Once these values are inserted, placeholders in Appendix A can be resolved in a single controlled update.

11. Conclusion

The report has been restructured to a dependency-correct flow:

1. equipment calibration experiments,
2. temperature calibration experiments,
3. calibrated HI measurement experiments.

This structure is preserved while deferring calibration-sensitive numeric claims to explicit placeholders. The next revision cycle only requires filling those placeholders and regenerating plots/tables from updated data products.

Acknowledgements

Special thanks to my lab partners Nathaneil and Kayhan for group observations, and to Aaron and Ben for instructional support.

A. Placeholder Map for Final Revision

This appendix centralizes all deferred values for the next data update.

- Time/clock validation: `TBD(UTC_PST_RESIDUAL_S)`, `TBD(JD_ROUNDTRIP_RESIDUAL_S)`, `TBD(LST_ASTROPY_RESIDUAL_S)`, `TBD(NTP_OFFSET_MS)`.
- Pointing validation: `TBD(LB120_RA_DEC)`, `TBD(POINTING_RESIDUAL_ARCMIN)`, `TBD(POINTING_CUT_ARC`
  `TBD(LB120_TIME_WINDOW)`.
- Pre-science receiver checks: `TBD(BIRDIE_FREQ_CHECK_SUMMARY)`, `TBD(ADC_HISTOGRAM_SUMMARY)`, `TBD(GAIN_SETTING_RANGE_SUMMARY)`, `TBD(FIR_EDGE_PLACEMENT_SUMMARY)`.

- Week-1 SGP substitution note and metadata: explicitly documented in §7.1 (March 5, 2026 session metadata and $\Delta v_{\rm LSR} \approx -7.02\,{\rm km\,s^{-1}}$).
- Cable calibration: `TBD(CABLE_ALPHA_DB_PER_M)`, `TBD(CABLE_ALPHA_CI95)`, `TBD(CABLE_DELTA_B_DB)`, `TBD(UNKNOWN_LENGTH_M)`.
- Termination/propagation: `TBD(VCOAX_M_PER_S)`, `TBD(TERMINATION_STATE_COMPARISON)`.
- SDR/chain: `TBD(SDR_VOLT_SCALE_V_PER_COUNT)`, `TBD(AMP_GAIN_TABLE)`, `TBD(FILTER_LOSS_TABLE)`, `TBD(ROOF_CABLE_LENGTH_M)`.
- Datasheet extraction: `TBD(CHAIN_DATASHEET_TABLE_WITH_PART_NUMBERS)`.
- Temperature calibration: `TBD(Y1420)`, `TBD(Y1421)`, `TBD(TRX_1420_K)`, `TBD(TRX_1421_K)`, `TBD(APERTURE_EFFICIENCY)`, `TBD(BEAM_FILL_FACTOR)`.
- Line-shape extraction choices: `TBD(LINE_STACK_MEAN_SUMMARY)`, `TBD(LINE_STACK_MEDIAN_SUMMARY)`, `TBD(LINE_SMOOTH_NCHAN)`.
- HI science outputs: `TBD(LSR_SHIFT_KMS)`, `TBD(N_GAUSS_FINAL)`, `TBD(VLSR_COMPONENTS_KMS)`, `TBD(FWHM_COMPONENTS_KMS)`, `TBD(CHI2_RED_FINAL)`.
- Effective efficiency estimate from current data: `labs/02/report/eta_eff_estimate.csv` (currently $\eta_{\rm eff} = 0.64 \pm 0.28$).
- Uncertainty totals: `TBD(SIGMA_THERMAL_PER_CHANNEL)`, `TBD(SIGMA_BASELINE_SYS)`, `TBD(SIGMA_TEMP_SCALE_SYS)`, `TBD(SIGMA_CABLE_CAL_SYS)`.

B. Detailed Equipment Calibration Models

B.1. Known-Length Cable Models

For SDR channels at two LOs:

$$y_i(L) = B_i - \alpha L, \qquad i \in \{1420, 1421\}. \tag{B1}$$

Reflection-aware extension:

$$y_i(L) = B_i - \alpha L + A_i \cos(kL + \phi_i). \tag{B2}$$

These alternatives are retained for sensitivity bracketing and model-risk discussion.

B.2. Unknown-Length Inversion

Given fitted intercept and slope,

$$L_i = \frac{B_i - y_i^{\mathrm{obs}}}{\alpha}. \tag{B3}$$

The reported unknown length uses a combined estimate across channels and bootstrap confidence intervals.

B.3. Termination and Reflectometry Derivation

From a measured round-trip delay Δt on a cable of length L,

$$v_{\mathrm{coax}} = \frac{2L}{\Delta t}. \tag{B4}$$

Final entries in this section will include state-by-state waveform evidence, frequency dependence, and uncertainty propagation.

C. Detailed HI Model and Fitting Notes

C.1. Line Extraction and Calibration Chain

Core chain used in analysis:

$$r_{\mathrm{line}}(\nu) = \frac{s_{\mathrm{on}}(\nu)}{s_{\mathrm{off}}(\nu)}, \tag{C1}$$

$$T_{\mathrm{line}}(\nu) = r_{\mathrm{line}}(\nu)\, G. \tag{C2}$$

C.2. Baseline and Component Fitting

Baseline models and Gaussian component fits are evaluated with least-squares diagnostics, then optionally cross-checked with MCMC/LOO model-selection workflows. Final selected model and posterior/covariance summaries will be inserted in the next revision.

D. Reproducibility Notes

Primary notebooks currently used: `labs/02/equipment_calibration.ipynb`, `labs/02/temperature`
and `labs/02/analysis.ipynb`.

Primary report-support scripts now include: `labs/02/scripts/pointing_backend_benchmark.py` and `labs/02/scripts/estimate_eta_eff.py`.

Data roots used: `data/lab02/*`.

A final update pass should regenerate figures, replace all `TBD(...)` placeholders, and recompile this document.