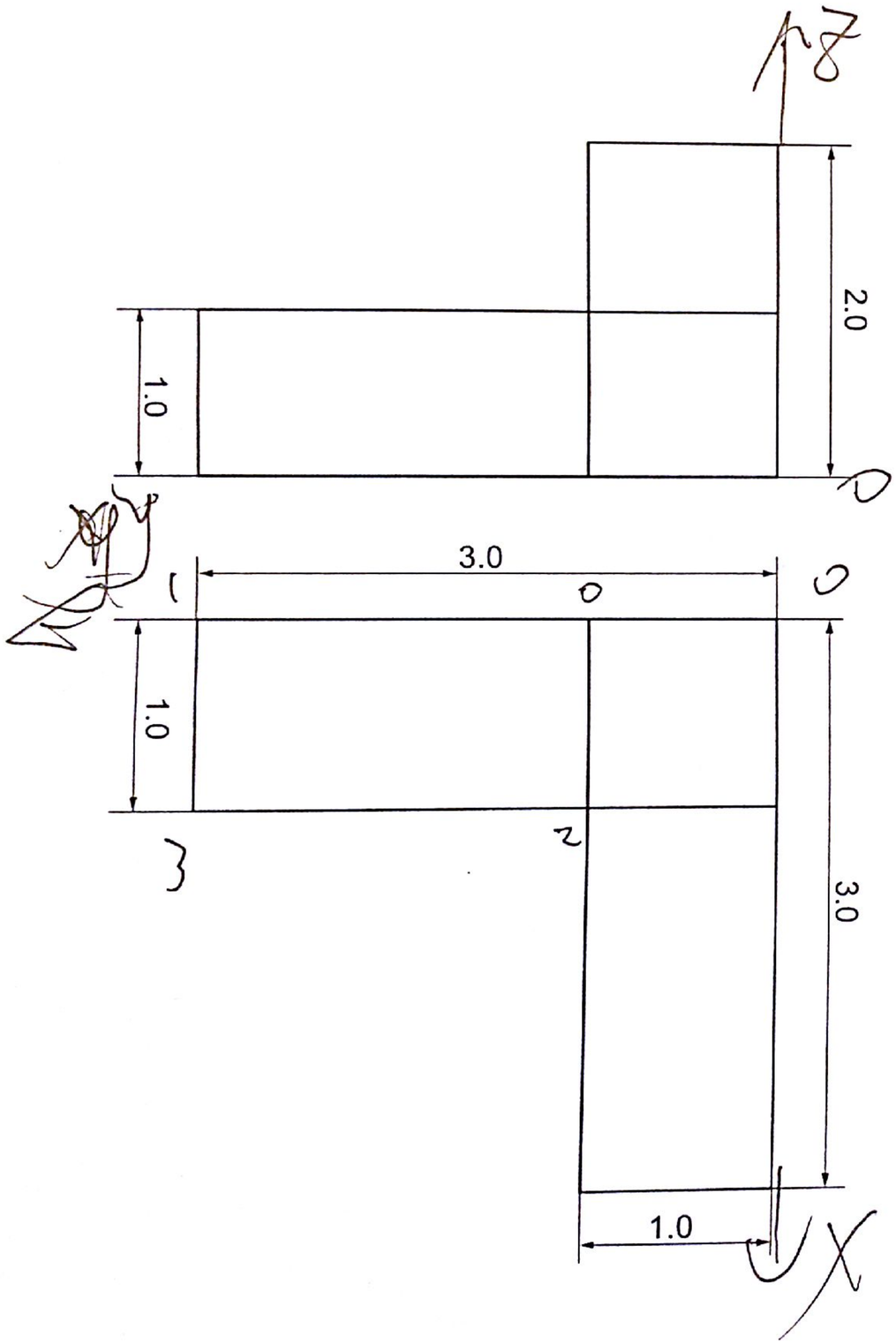

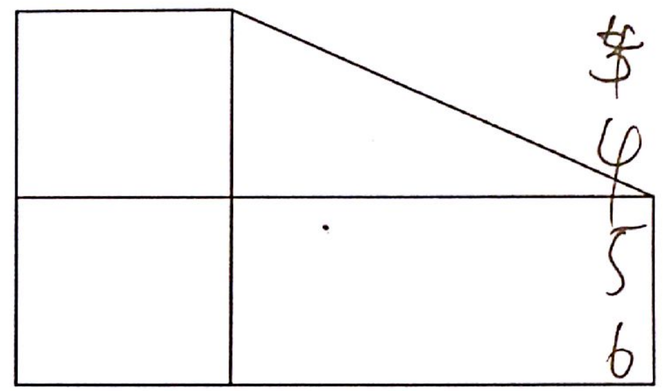

points	coordinates	points	coordinates
0	(0,1,0)	9	(3,1,1)
1	(0,3,0)	10	(1,1,2)
2	(1,1,0)	11	(0,1,2)
3	(1,3,0)	12	(0,0,0)
4	(1,1,1)	13	(0,0,2)
5	(1,3,1)	14	(1,0,2)
6	(0,1,1)	15	(3,0,1)
7	(0,3,1)	16	(3,0,0)
8	(3,1,0)		
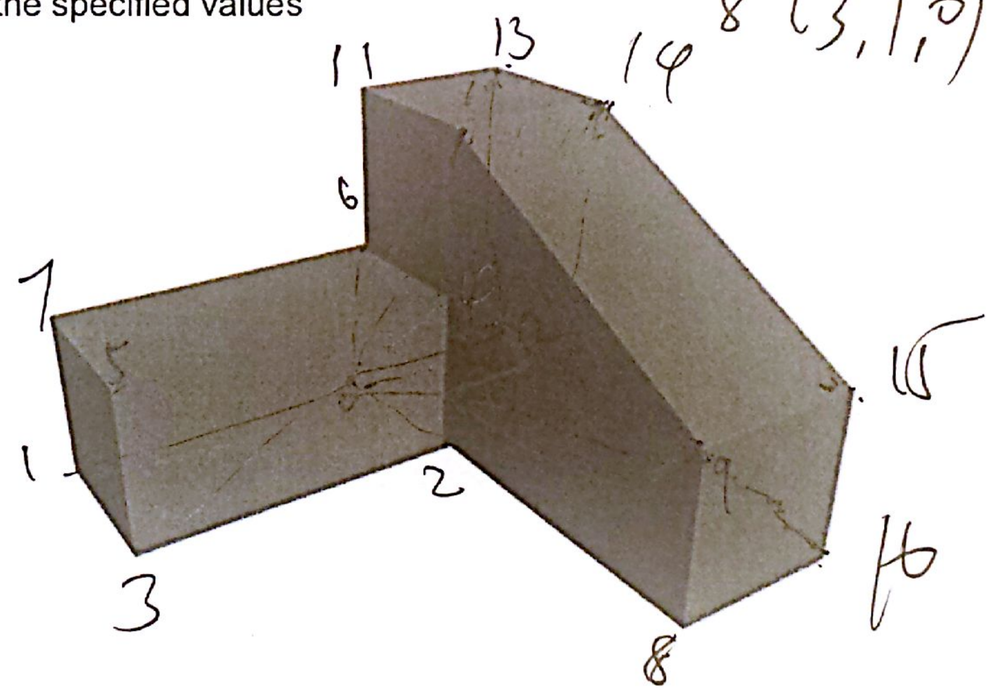
Do not take a ruler to measure any length, use the specified values