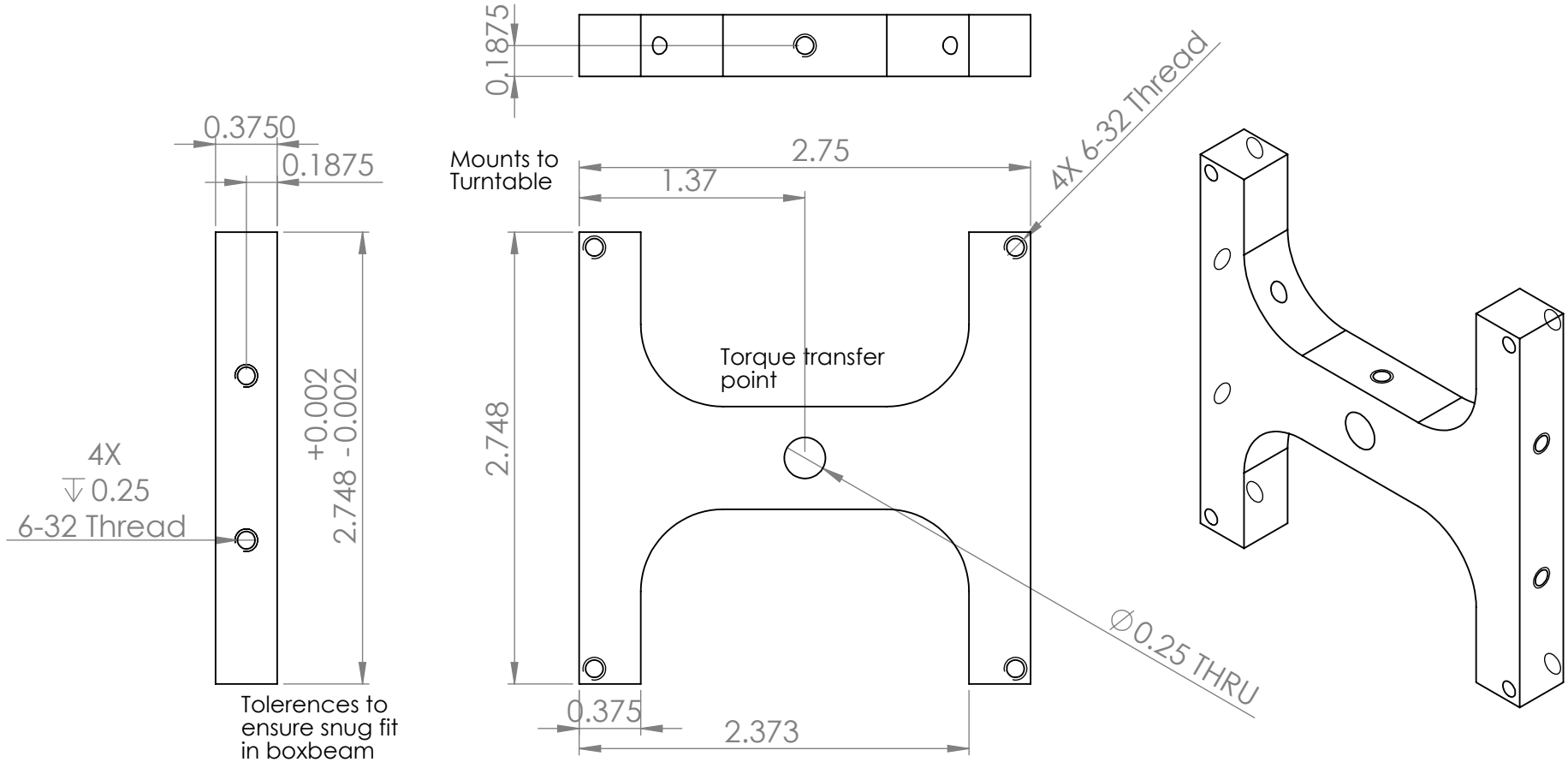

PROPRIETARY AND CONFIDENTIAL

Permission is hereby granted, free of charge, to any person obtaining a copy of this software and associated documentation files (the "Software"), to deal in the Software without restriction, including without limitation the rights to use, copy, modify, merge, publish, distribute, sublicense, and/or sell copies of the software, and to permit persons to whom the Software is furnished to do so, subject to the following conditions:

SolidWorks Student Edition.
For Academic Use Only.

NEXT ASSY | USED ON

APPLICATION

UNLESS OTHERWISE SPECIFIED:

DIMENSIONS ARE IN INCHES
TOLERANCES:
FRACTIONAL ±
ANGULAR: MACH ± BEND ±
TWO PLACE DECIMAL ±
THREE PLACE DECIMAL ±

INTERPRET GEOMETRIC TOLERANCING PER:

MATERIAL

FINISH

DO NOT SCALE DRAWING

	NAME	DATE
DRAWN	R.R.CHEN	02/27/15
CHECKED		
ENG APPR.		
MFG APPR.		
Q.A.		

COMMENTS:
Set Screw fit for 1/4 inch shaft (NEMA 23).
Adaptor required for 5mm shaft (NEMA 17)

R.R.CHEN et al.

TITLE:

Connector Plate

SIZE A | DWG. NO. 102_Connector_Plate | REV 2

SCALE: 1:1 | WEIGHT: | SHEET 1 OF 1

5 4 3 2 1