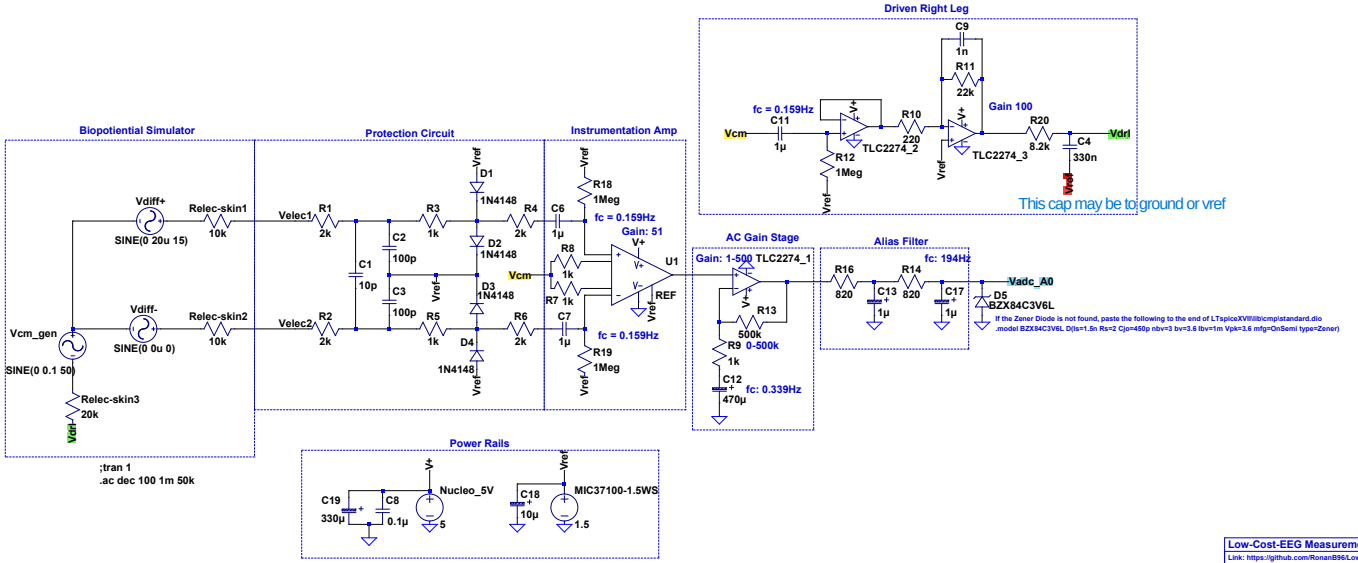


| | |
|---|---|
| Low-Cost-EEG Measurement Circuit V1.0 | |
| Link: https://github.com/RonanB96/Low-Cost-EEG-Based-BCI | |
| Original Author: Ronan Byrne | |
| Date: 09-05-2018 | |
| Sheet 1/1 | |