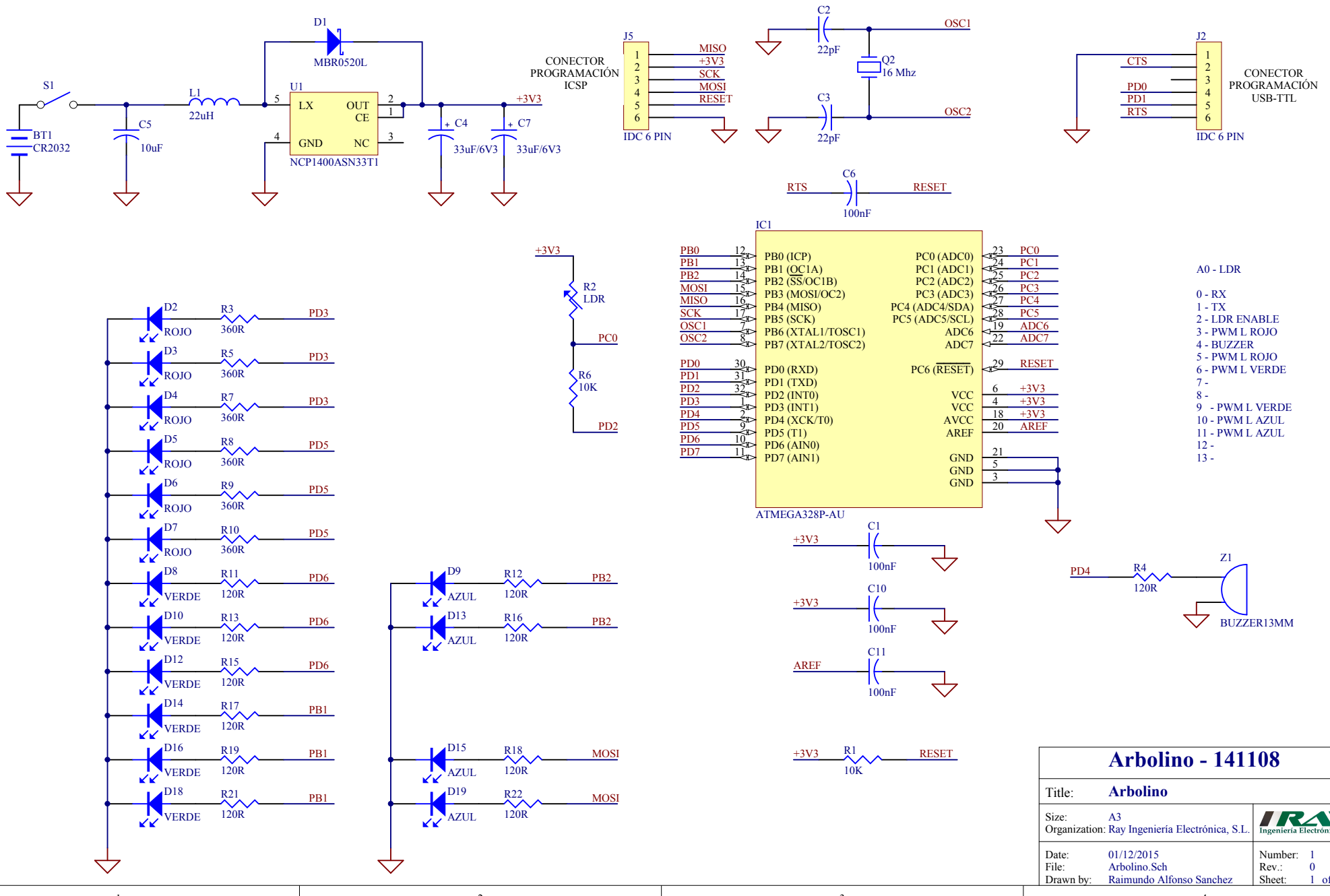

Arbolino - 141108

Title:	**Arbolino**		
Size:	A3		
Organization:	Ray Ingeniería Electrónica, S.L.		
Date:	01/12/2015	Number:	1
File:	Arbolino.Sch	Rev.:	0
Drawn by:	Raimundo Alfonso Sanchez	Sheet:	1 of 1