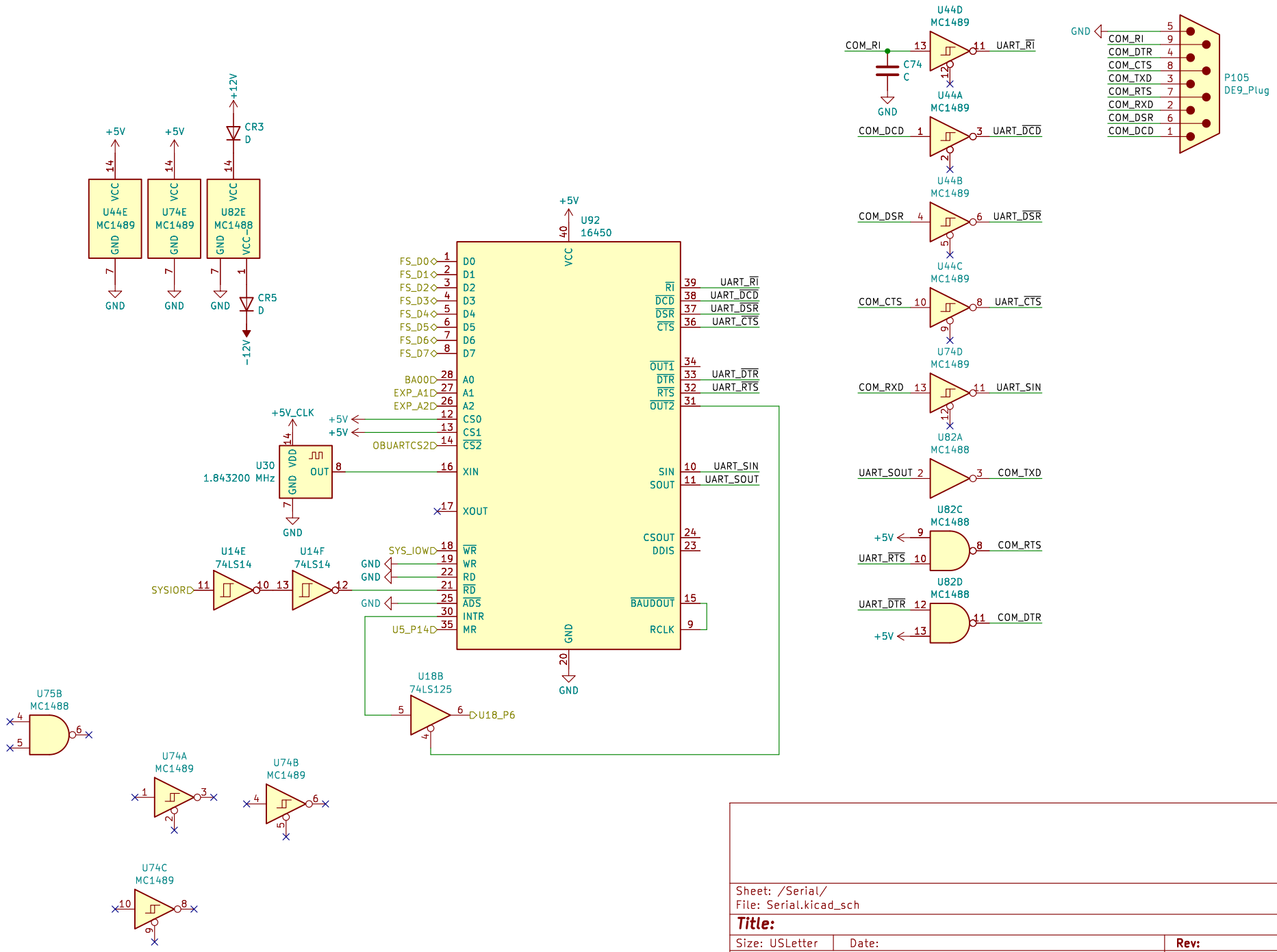
U44E
MC1489
U74E
MC1489
U82E
MC1488
+5V
+12V
-12V
CR3
D
CR5
D
GND
U92
16450
VCC
FS_D0
FS_D1
FS_D2
FS_D3
FS_D4
FS_D5
FS_D6
FS_D7
BA00
EXP_A1
EXP_A2
OBUARTCS2
SYS_IOW
U5_P14
U30
1.843200 MHz
+5V_CLK
XIN
XOUT
SYSIORD
U14E
74LS14
U14F
74LS14
U18B
74LS125
U18_P6
U75B
MC1488
U74A
MC1489
U74B
MC1489
U74C
MC1489
U44D
MC1489
U44A
MC1489
U44B
MC1489
U44C
MC1489
U74D
MC1489
U82A
MC1488
U82C
MC1488
U82D
MC1488
COM_RI
C74
C
COM_DCD
COM_DSR
COM_CTS
COM_RXD
UART_SOUT
UART_DTR
UART_RI
UART_DCD
UART_DSR
UART_CTS
UART_DTR
UART_RTS
UART_SIN
UART_SOUT
COM_TXD
COM_RTS
COM_DTR
P105
DE9_Plug
COM_TXD
COM_RTS
Sheet: /Serial/
File: Serial.kicad_sch
Title:
Size: USLetter
Date:
Rev:
KiCad E.D.A. kicad 7.0.6
Id: 3/7