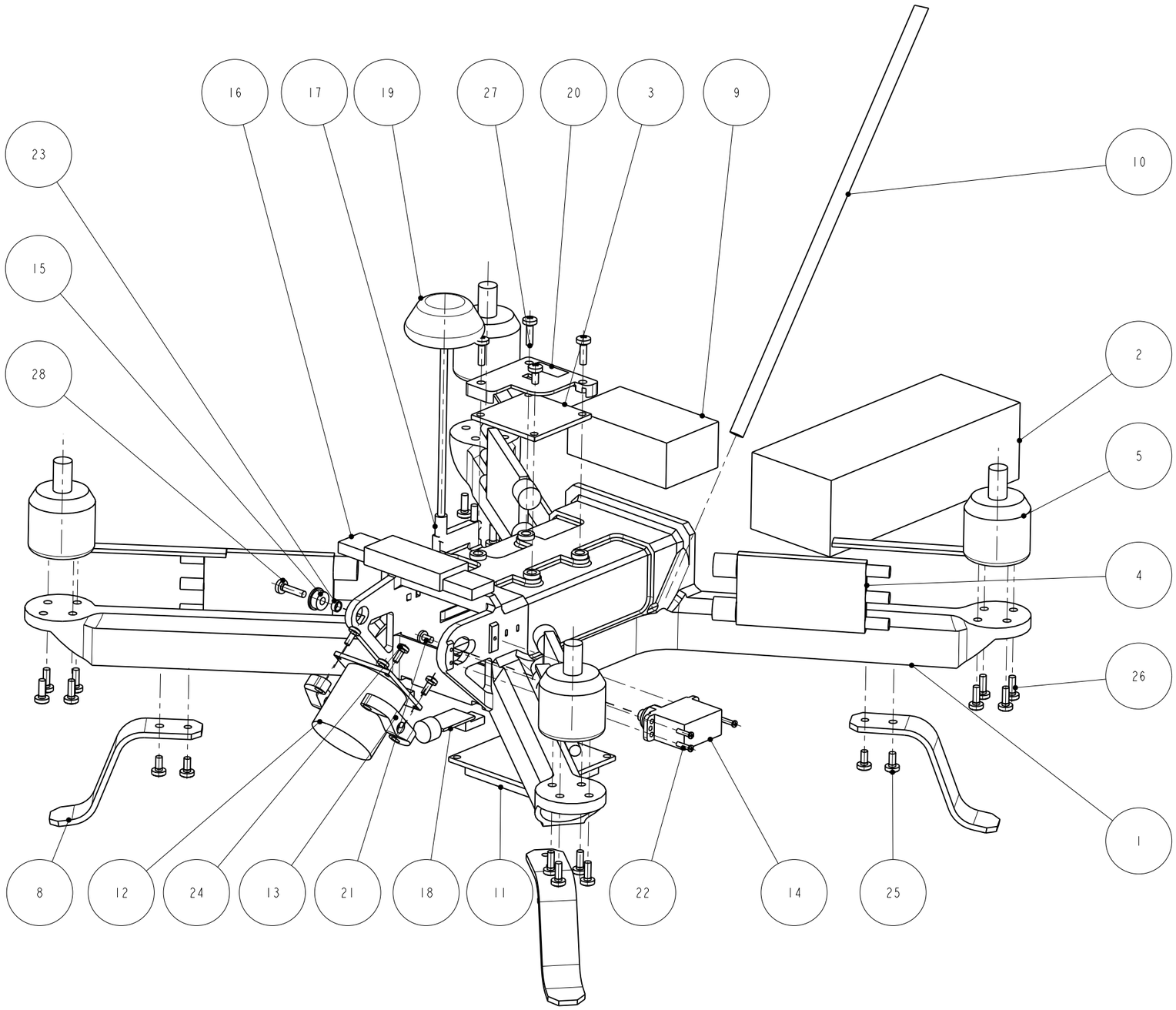

IDX	NAME	DESC/PART NUMBER	Q.TY
28	V3-12--_-_U7687_PZ	VITE M3X12 UNI 7687 A4	1
27	V3-10--_-_U7687_PZ	VITE M3X10 UNI 7687 A4	3
26	V3-8--_-_U7687_PZ	VITE M3X8 UNI 7687 A4	16
25	V3-6--_-_U7687_PZ	VITE M3X6 UNI 7687 A4	9
24	V2-5-6--_-_U7687_PZ	VITE M2X5X6 UNI 7687 A4	4
23	SPACER	Di=3.5 L=2.4	1
22	SERVO_BODY_SCREW	FROM SERVO FIXING KIT	3
21	SERVO_AXLE_SCREW	FROM SERVO FIXING KIT	1
20	NAZE32COVER	3D PRINTED (PLA)	1
19	ANT	SPIRONET RHCP SMA ANTENNA	1
18	MIC	PREAMPLIFIED MICROPHONE MODULE	2
17	VTX	IMMERSIONRC 5.8GHZ 600MW VTX	1
16	OSD	MINIM OSD	1
15	BEARING	3x9MM MINIATURE FLANGED BEARING	1
14	SERVO	HITEC HS-65HB	1
13	CAMERA_FRAME	3D PRINTED (PLA)	1
12	CAMERA	QUANUM 700TVL 2.8MM LENS	1
11	PDB	HK PILOT V1 PDB MODULE	1
10	CANNA_ANTENN	ACRYLIC TUBE Di=4 De=6	1
9	RX	FUTABA R149DP	1
8	L_GEAR	3D PRINTED (ABS)	4
7	PROP_CCW	DJI 9.4x5" CCW PROP	2
6	PROP_CW	DJI 9.4x5" CW PROP	2
5	ENGINE	DJI 2312	4
4	ESC	DJI 420S	4
3	FC	NAZE32 REV6	1
2	BATT	FULLPOWER - LIPO PACK 4S 4200MAH 35C	1
1	BODY	3D PRINTED (PLA)	1

NOTES:
ALL THREADED HOLES IN PLASTIC TO BE FITTED WITH METALLIC THREADED INSERTS

-	-	SEE DWG
Material	Treatment	Notes

Unless specified, all dimensions are in mm
General tolerances shall be according to
UNI ISO 2768 - ☐f ☐m ☐c

Soluzioni per l'innovazione
info@inova-soluzioni.it
The copyright of this document is the property of INOVA S.r.l.
It may be copied, distributed and used in osservance with the Creative Commons Attribution-NonCommercial license.

APPROVALS	SIGN	DEPT.	DATE
Drawn:	rb1205		22/05/16
Checked:			
Approved:			
Approved:			

Title:
UNIBODY FPV QUAD W TILTING CAM

Drawing no: UNIBODY

Sheet 1 of 2 | Scale 1:2 | Revision 01

REV	DESCRIPTION	CRO N	DATE	ORIGIN	CHECK

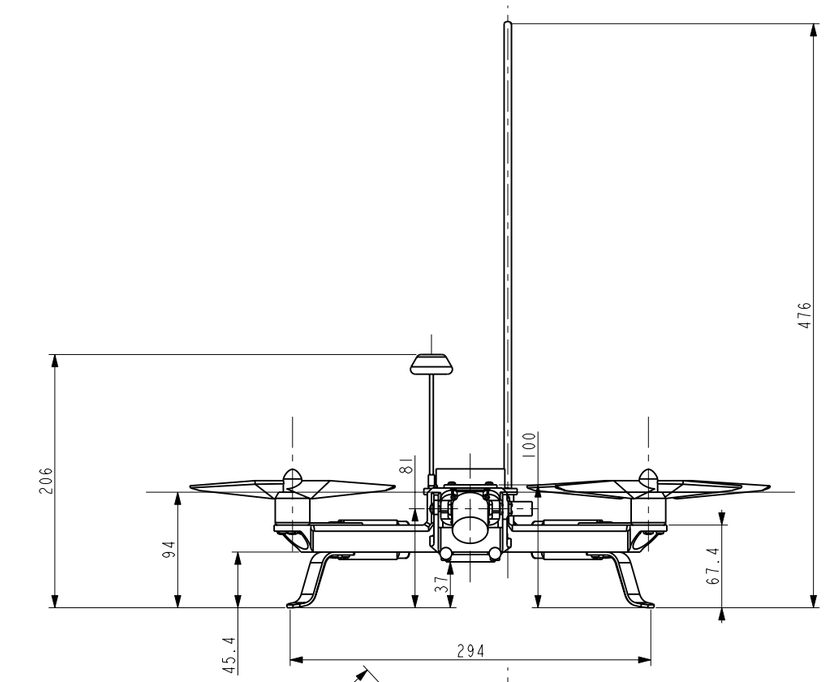

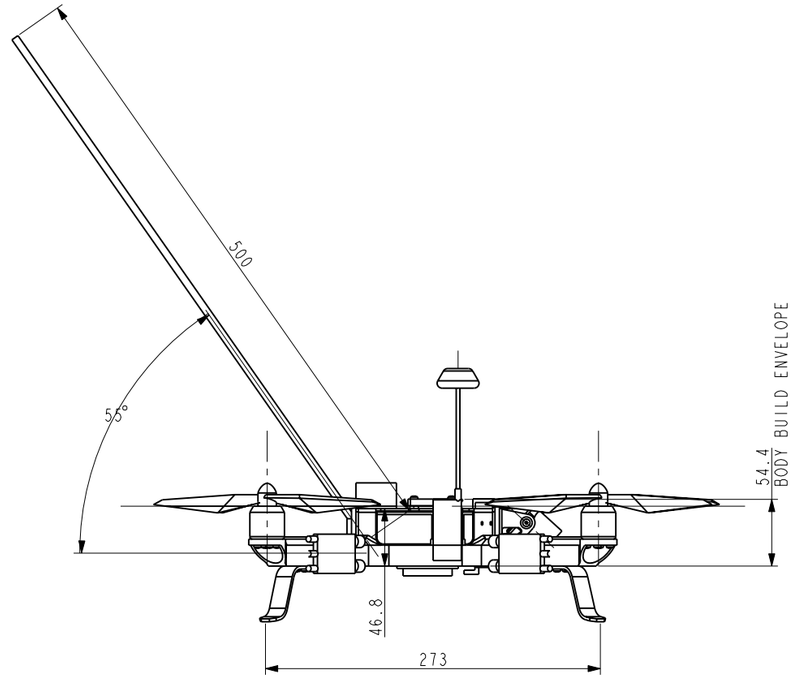

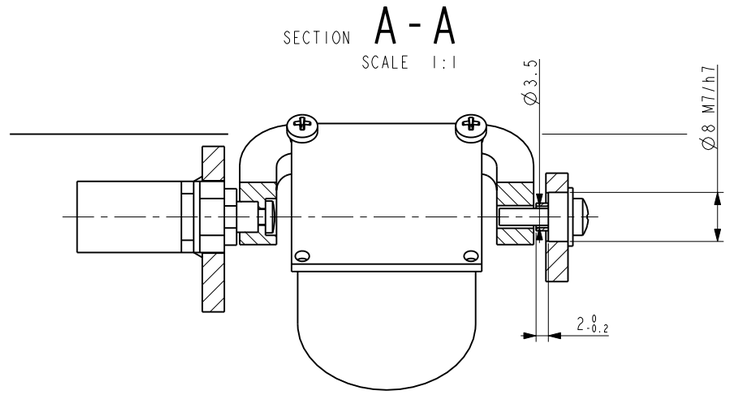

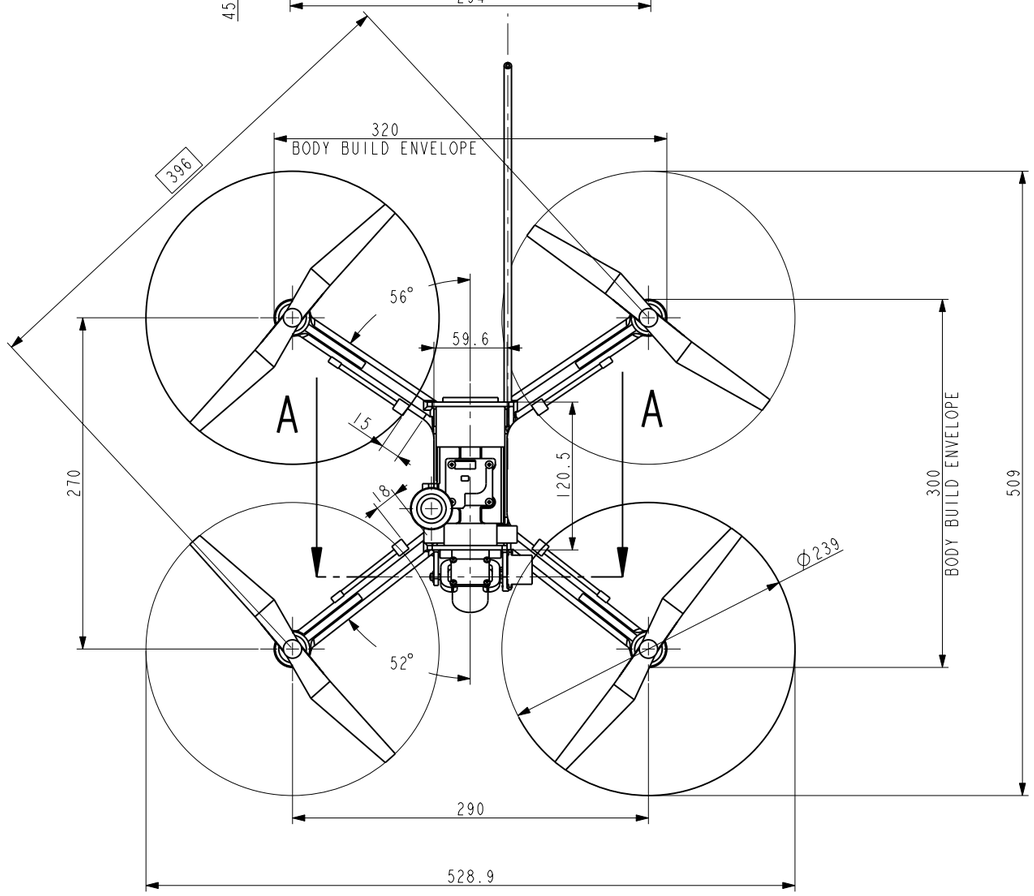

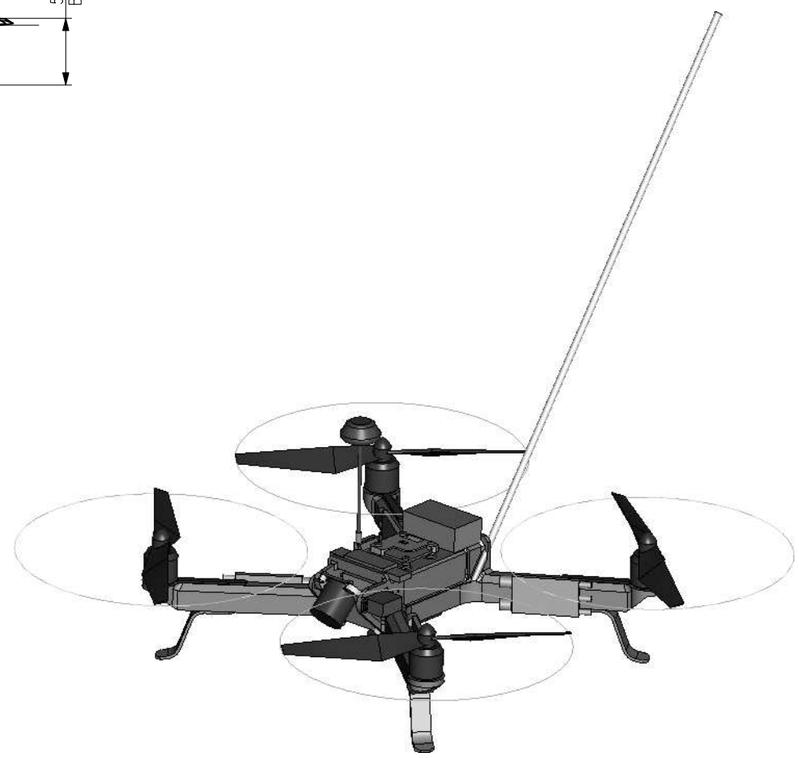

-	-	-
Material	Treatment	Notes

Unless specified, all dimensions are in mm
General tolerances shall be according to
UNI ISO 2768 - ☐f ☐m ☐c

Soluzioni per l'innovazione

info@inova-soluzioni.it

The copyright of this document is the property of INOVA S.r.l.
It may be copied, distributed and used in osservance with the Creative Commons Attribution-NonCommercial license.

APPROVALS	SIGN	DEPT.	DATE
Drawn:	rb1205		22/05/16
Checked:			
Approved:			
Approved:			

Title:
UNIBODY FPV QUAD W TILTING CAM

Drawing no: UNIBODY

Sheet 2 of 2 | Scale 1:5 | Revision 01

REV	DESCRIPTION	CRO N	DATE	ORIGIN	CHECK