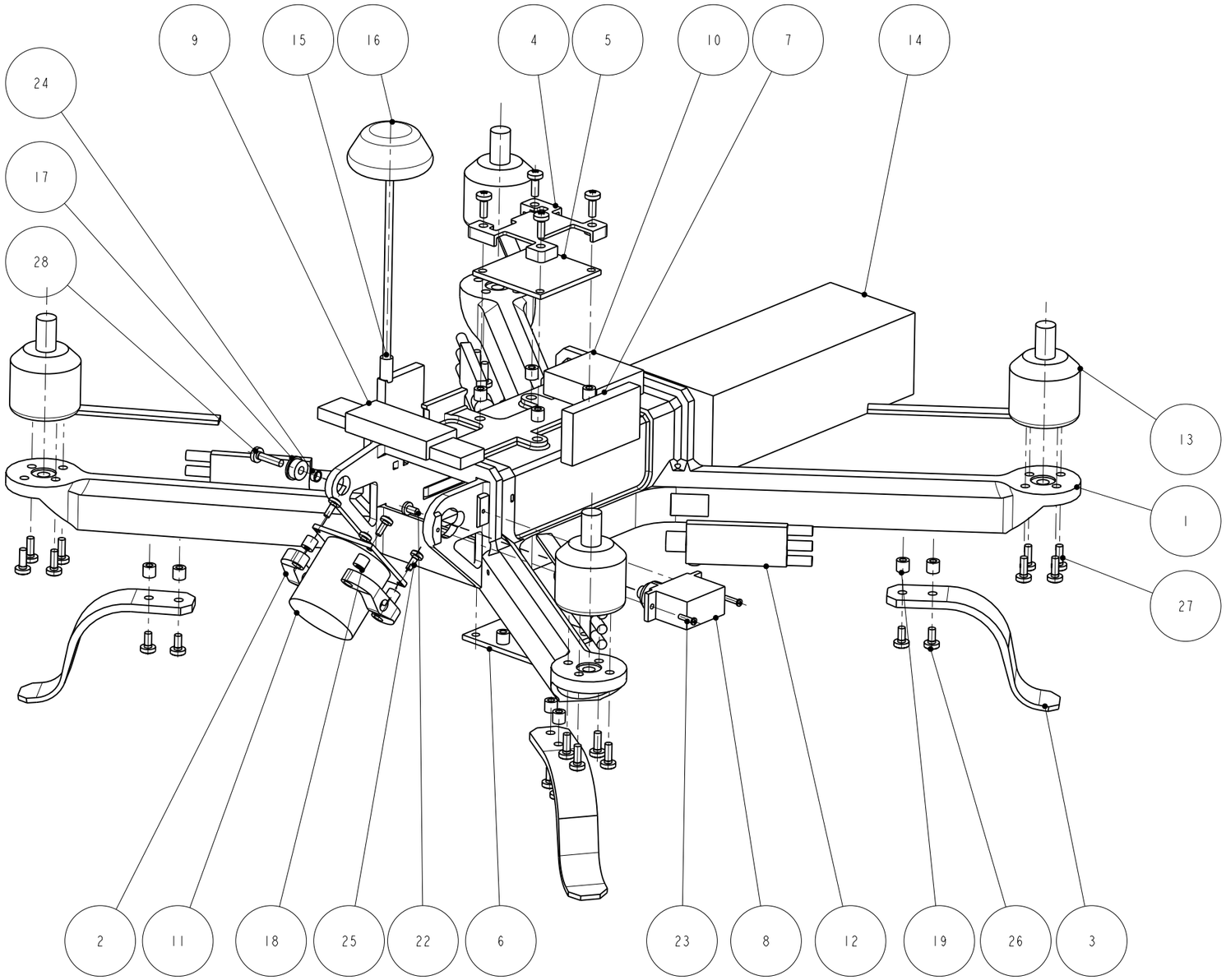

IDX	NAME	DESC/PART NUMBER	Q.TY
28	V3-12--_-_U7687_PZ	VITE M3X12 UNI 7687 A4	1
27	V3-8--_-_U7687_PZ	VITE M3X8 UNI 7687 A4	20
26	V3-6--_-_U7687_PZ	VITE M3X6 UNI 7687 A4	8
25	V2-5-6--_-_U7687_PZ	VITE M2X5X6 UNI 7687 A4	4
24	SPACER	Di=3.5 L=2 METALLIC	1
23	SERVO_BODY_SCREW	FROM SERVO FIXING KIT	2
22	SERVO_AXLE_SCREW	FROM SERVO FIXING KIT	1
21	PROP_CW	9450 SELF-TIGHTENING	2
20	PROP_CCW	9450 SELF-TIGHTENING	2
19	M3_INS	M3 METALLIC INSERT FOR PLASTIC	16
18	M2-5_INS	M2.5 METALLIC INSERT FOR PLASTIC	4
17	BEARING	3x9MM MINIATURE FLANGED BEARING	1
16	ANT	SPIRONET RHCP SMA ANTENNA	1
15	VTX	IMMERSIONRC 5.8GHZ 600MW VTX	1
14	BATT	LIPO BATTERY 4S 3300MAH	1
13	MULTISTAR_ELITE_2312	2312 MOTORS	4
12	ESC	MULTISTAR 25A SLIM	4
11	CAMERA	QUANUM 700TVL 2.8MM LENS	1
10	GPS	UBLOX NEO-M8N	1
9	OSD	MINIM OSD	1
8	SERVO	MINI SERVO 180° RANGE	1
7	RX	FRSKY X4RSB	1
6	PDB	PDB MODULE WITH 5V AND 12V UBEC	1
5	FC	SERIOUSLY PRO RACING F3 EVOLUTION	1
4	SPRACINGF3_COVER	3D PRINTED (PLA)	1
3	L_GEAR	3D PRINTED (ABS)	4
2	CAMERA_FRAME	3D PRINTED (PLA)	1
1	BODY	3D PRINTED (PLA)	1

-	-	SEE DWG
Material	Treatment	Notes

Unless specified, all dimensions are in mm
General tolerances shall be according to
UNI ISO 2768 - ☐f ☐m ☐c

Soluzioni per l'innovazione

riccardo.belloli@inova-soluzioni.it
The copyright of this document is the property of INOVA S.r.l.
It may be copied, distributed and used in osservance with the
Creative Commons Attribution-NonCommercial license.

APPROVALS	SIGN	DEPT.	DATE
Drawn:	rb1205		22/05/16
Checked:			
Approved:			
Approved:			

Title:
UNIBODY FPV QUAD W TILTING CAM

Drawing no: UNIBODY

Sheet 1 of 2 | Scale 1:2 | Revision 02

REV	DESCRIPTION	CRO N	DATE	ORIGIN	CHECK
2	UPDATED WITH LATEST COMPONENTS		21/04/17		

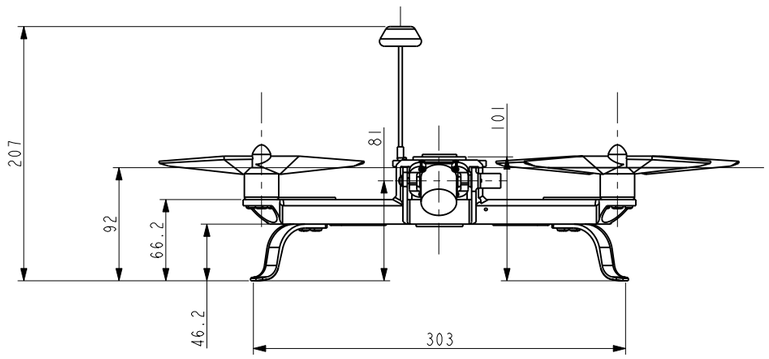

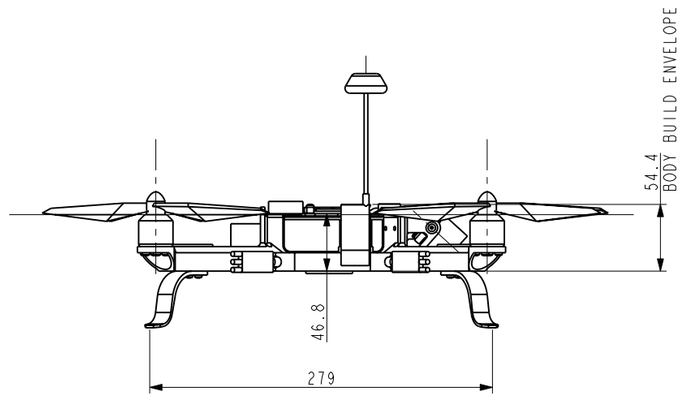

CAMERA GIMBAL
SECTION A - A
SCALE 1:1

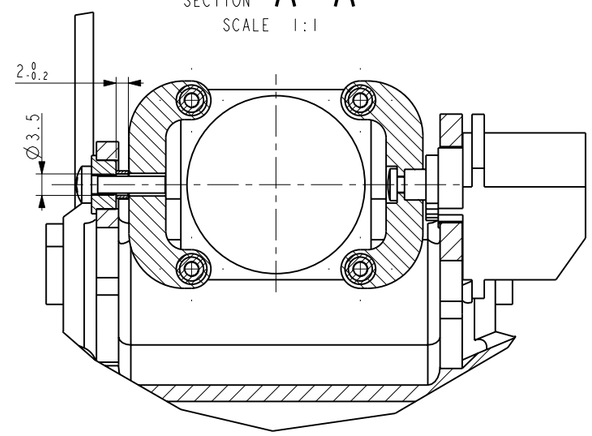

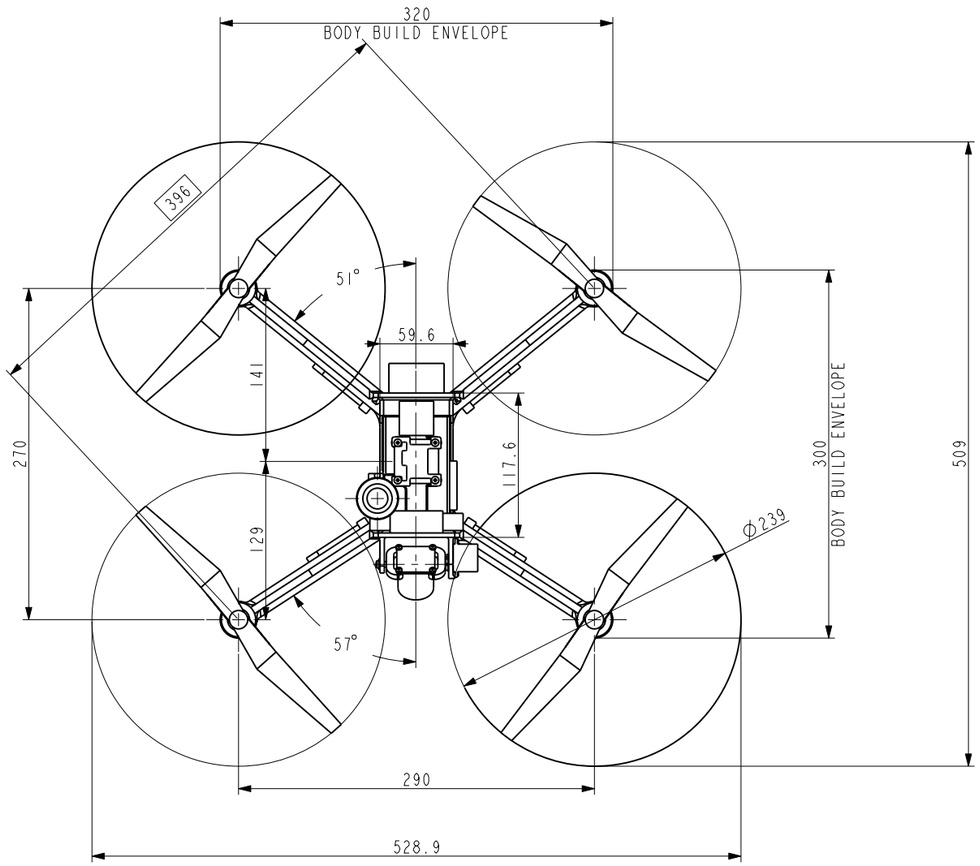

SCALE 1:2
BATTERY BAY DIMENSIONS

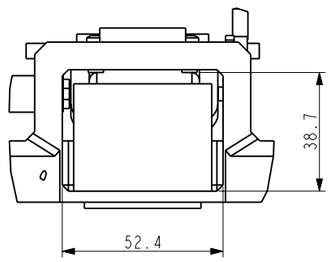

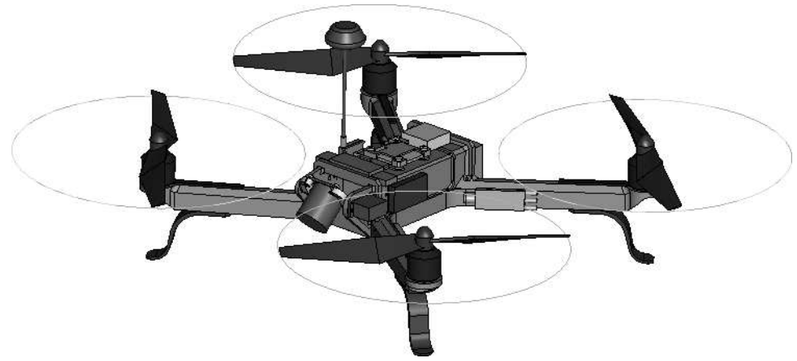

REV	DESCRIPTION	CRO N	DATE	ORIGIN	CHECK

-		-		-	
Material		Treatment		Notes	
Unless specified, all dimensions are in mm General tolerances shall be according to UNI ISO 2768 - ☐f ☐m ☐c				Soluzioni per l'innovazione riccardo.belloli@inova-soluzioni.it The copyright of this document is the property of INOVA S.r.l. It may be copied, distributed and used in osservance with the Creative Commons Attribution-NonCommercial license.	
APPROVALS	SIGN	DEPT.	DATE	Title: UNIBODY FPV QUAD W TILTING CAM	
Drawn:	rb1205		22/05/16		
Checked:					
Approved:				Drawing no: UNIBODY	
Approved:				Sheet 2 of 2	Scale 1:5 / Revision 02