f_lp1 = (1/2.pi).3k3.100n = 482Hz

f_lp2 = (1/2.pi).1k.100n = 1.59kHz

output amplitude = 1.2v p-p

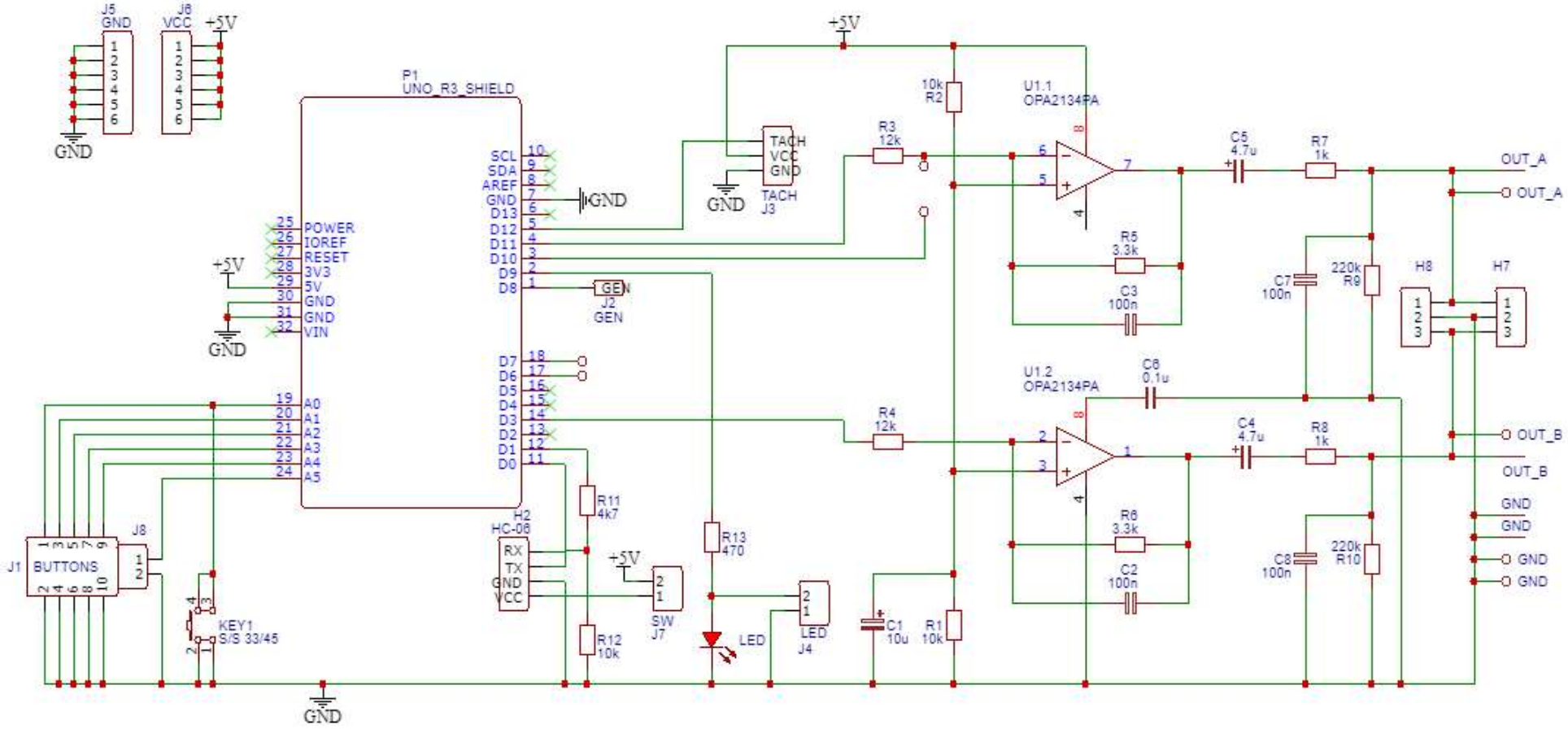

TITLE: supaspin		REV: 1.0
EasyEDA	Company:	Sheet: 1/1
	Date: 2021-01-15 Drawn By: R.Balmford	