Forecasting of FTSE 100 Index price movements using Quantum Computing approaches(Phase1)

Aakash Swami and Gajendra Malviya

19th Jan 2024

| Copyright © 2020 Tata Consultancy Services Limited

Background work

Researches that use classical models:

- Stock market index prediction using artificial neural network [1]
- Comparing Machine Learning Methods—SVR, XGBoost, LSTM, and MLP— For Forecasting the Moroccan Stock Market[2]
  - investigate modeling and forecasting the daily prices of the new Morocco Stock Index 20 (MSI 20).
  - The results show that using the Grid Search (GS) optimization algorithm, the SVR and MLP models outperform the other models and achieve high accuracy in forecasting daily prices
- ARIMA vs LSTM on NASDAQ stock exchange data[3]
  - Arima performed better.
  - The reason of this behavior is that not enough features were considered (just one feature was used – price). LSTM consists of a more complicated architecture which needs more features for effective training. Otherwise, the LSTM model is in its basic state and is not using its full potential.
- PREDICT STOCK PRICES WITH ARIMA AND LSTM[4]
  - LSTM perform better

Researches that use quantum models

- The Potential of Quantum Techniques for Stock Price Prediction[5]
  - Explored the potential applications of various Quantum Algorithms for stock price prediction by conducting a series of experimental simulations using both Classical as well as Quantum Hardware.
  - Extracted various stock price indicators, such as Moving Averages (MA), Average True Range (ATR), and Aroon, to gain insights into market trends and stock price movements.
  - Employed Quantum Annealing (QA) for feature selection and Principal Component Analysis (PCA) for dimensionality reduction.
  - Further, we transformed the stock price prediction task essentially into a classification problem.
- One-step time series forecasting using variational quantum circuits[6]
  - Predicts one value in the future by considering previous m values.
  - Treat problem as solving a system of linear equations on a quantum computer.
  - Used Variational Quantum Linear Solver (VQLS)
- Quantum Machine Learning in Finance: Time Series Forecasting[7]
  - Compared QNN and LSTM

TCS Confidential

Background work: Quantum techniques

Variational or parameterized quantum circuit

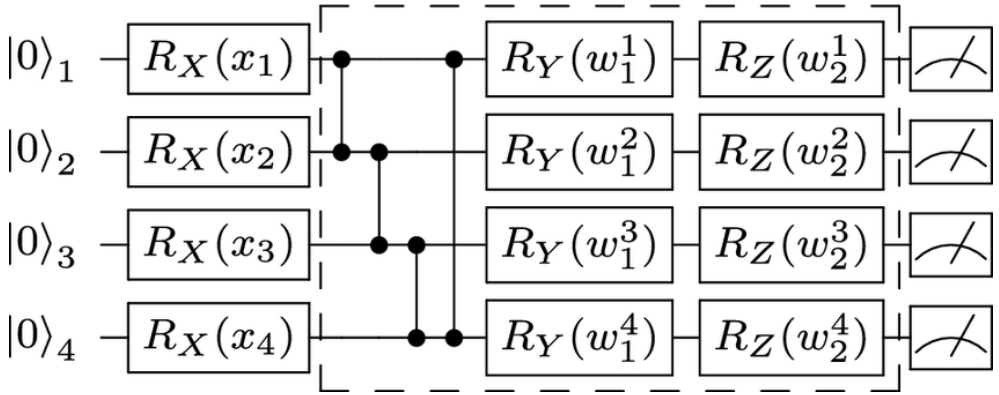

Quantum Long Short-Term Memory[8]

LSTM

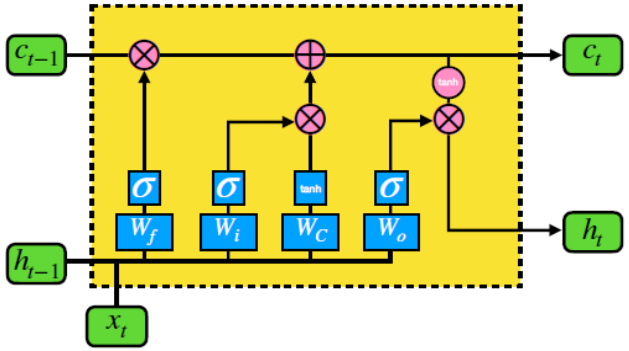

QLSTM

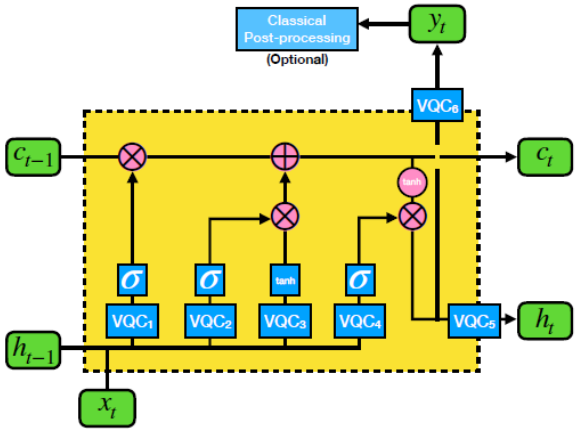

Data re-uploading for a universal quantum classifier[9]

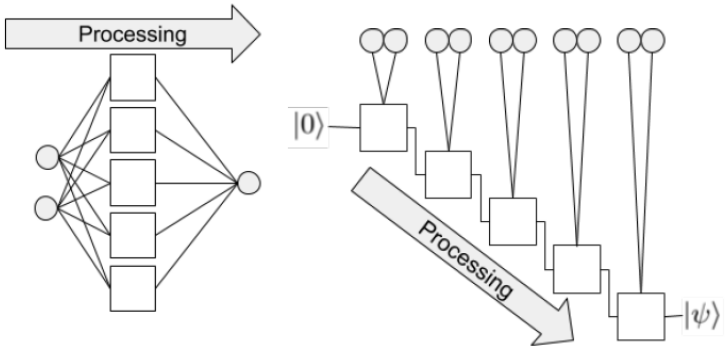

(a) Neural network (b) Quantum classifier

TCS Confidential

Solution Approach

- **Classical solution approach**
  - ANN
  - XGBOOST
  - LSTM
  - ARIMA
  - Multi linear regression

- **Quantum solution approach**
  - QLSTM: DRC
  - QNN: DRC

TCS Confidential

Data processing

- Many investors use technical indicators of a stock to decide whether to invest or not.
- Thus, we use various technical indicators as independent variables for our model. The list includes: -
  - Moving averages (SMA)
  - Moving averages convergence divergences (MACD)
  - Exponential Moving Average (EMA)
  - Bollinger bands

Data processing steps:

- Generate technical Indicators
- Interpolation
- Data Normalization

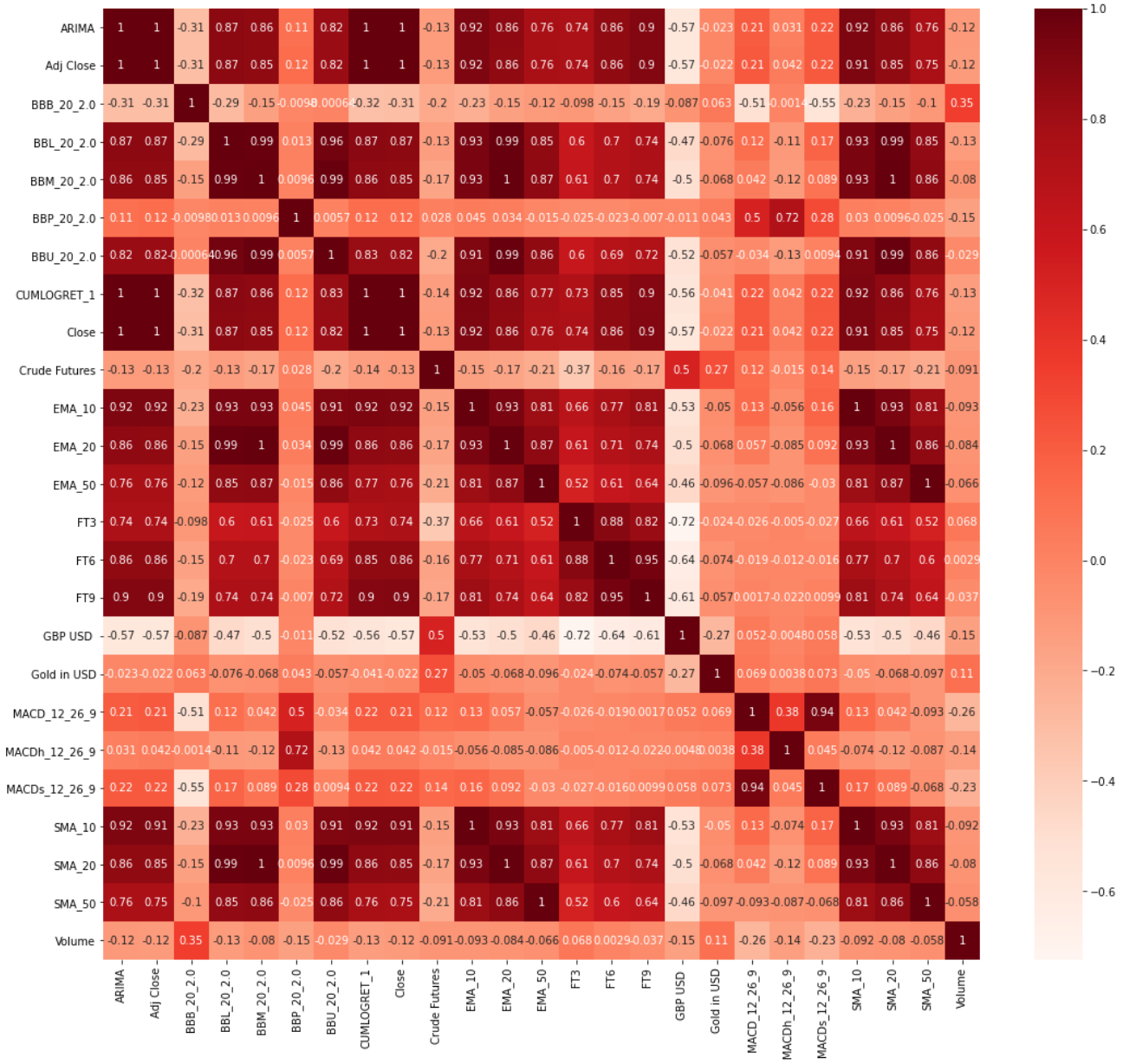

TCS Confidential

Example training and testing time series data

Data generation 1 ✓

Sample 1

X(features): Data features + Technical indicators					Y(target): Close price

Window

Sample 2

X(features): Data features + Technical indicators					Y(target): Close price

Data generation 2

X(features): Data features + Technical indicators					Y(target): Close price

The Data genration 1 approach that we generally use for training LSTM model is seen beneficial for training ANN model too and hence we used it for training all models.

We split the data in training and testing and reserved some data(at the end) for checking the predictions.

TCS Confidential

TATA CONSULTANCY SERVICES

Result: Classical model(10 days prediction)

Model	Train MAE	Test MAE	Train RMSE	Test RMSE
LSTM	9.57182	18.1612	15.3835	34.0568
Multiple linear regression	118.206	118.878	165.436	176.185
XGboost	12.9812	14.16	16.8939	18.5929
ANN	12.7901	12.9559	17.4935	17.7348

TCS Confidential

Result: Classical model : Next 10 days prediction

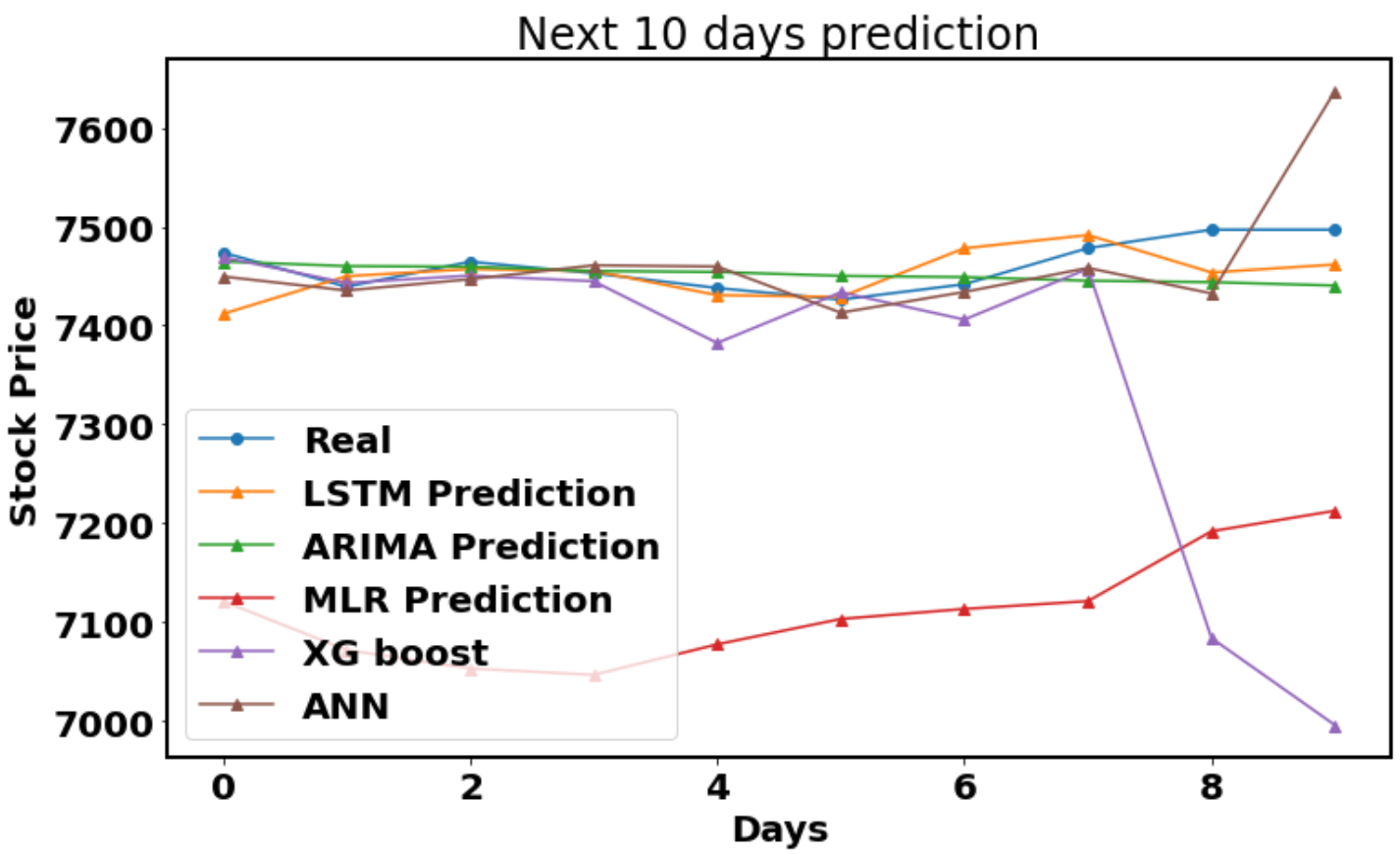

Model	Check MAE	Check RMSE
LSTM	22.0733	29.4987
ARIMA	22.7518	29.2383
Multiple linear regression	118.878	351.781
XGboost	106.459	206.669
ANN	32.118	50.9084

Accuracy(MAE): Keeping threshold as 100

Model	Predicted within Actual +/- threshold
LSTM	1
ARIMA	1
MLR	0
XGboost	0.8
ANN	0.9

TCS Confidential

Result: Classical model(30 days prediction)

Model	Train MAE	Test MAE	Train RMSE	Test RMSE
LSTM	5.28608	9.16704	8.53476	22.3534
Multiple linear regression	164.096	162.892	227.287	224.716
XGboost	11.7769	11.7782	15.3286	15.4274
ANN	5.9801	6.0187	8.52044	8.70444

TCS Confidential

Result: Classical model : Next 30 days prediction

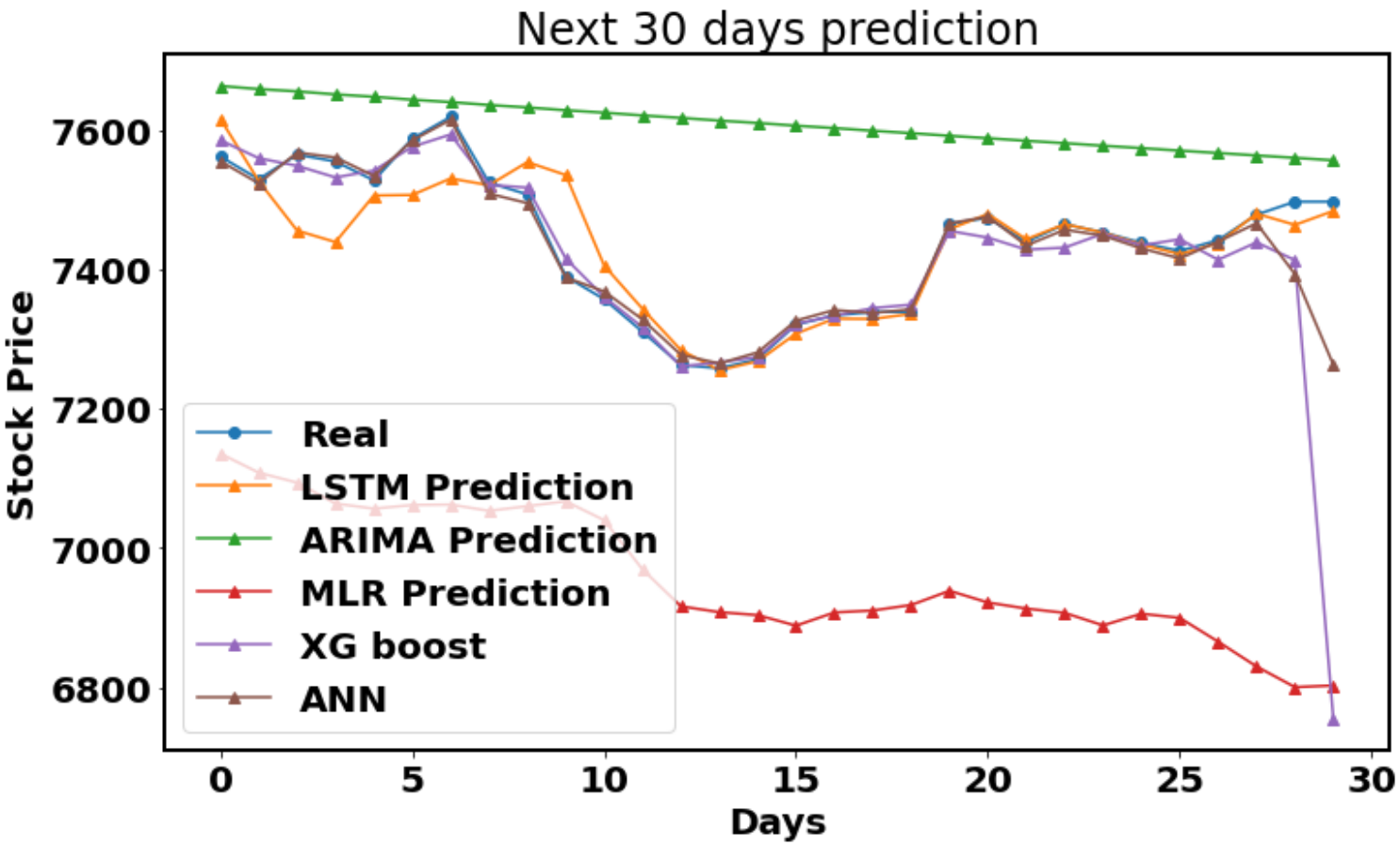

Model	Check MAE	Check RMSE
LSTM	29.4598	48.9825
ARIMA	167.562	193.087
Multiple linear regression	162.892	491.53
XGboost	40.694	137.318
ANN	17.8146	47.4276

Accuracy(MAE): Keeping threshold as 100

Model	Predicted within Actual +/- threshold
LSTM	0.9
ARIMA	0.23
MLR	0
XGboost	0.96
ANN	0.93

TCS Confidential

Quantum solution Approach

- **Because we got best performance with Neural network and LSTM in classical approach, we plan to explore Quantum neural network(QNN: DRC) and Quantum LSTM (QLSTM:DRC).**

- Instead of using Variational quantum circuit we plan to use the concept of DRC as it better replicate deep neural network architecture.

- The original paper related to DRC used DRC for classification, we will use modified DRC for regression tasks with MSE loss function.

- The data input to modified DRC is in set of 3 parameters allowing to upload more input data in the quantum circuit.

TCS Confidential

Quantum data reuploading(DRC)

Circuit (param, x, y)

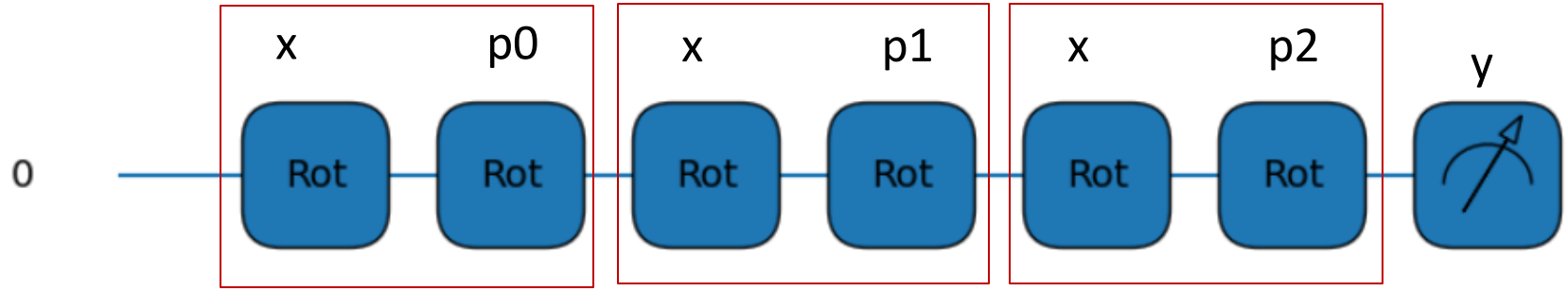

Data X

Point coordinate	Class
x1	
x2	

Parameters

p= [p0[...] ,p1[...] ,p2[...]]

Code

```
For itr in range(n):
    For x in X:
        f=Circuit (p, x)
        loss = loss + (1 - f) ** 2
    Based on loss update p
```

Pérez-Salinas, Adrián, Alba Cervera-Lierta, Elies Gil-Fuster, and José I. Latorre. "Data re-uploading for a universal quantum classifier." *Quantum* 4 (2020): 226.

TCS Confidential

Quantum data reuploading(DRC)

Pérez-Salinas et al. (2019) make a connection to Deep Neural Networks by describing that in their approach the "layers" $L_i(\vec{\theta}_i, \vec{x})$ are analogous to the size of the intermediate hidden layer of a neural network. And the concept of deep (multiple layers of the neural network) relates to the number of qubits. So, multiple qubits with entanglement between them could provide some quantum advantage over classical neural networks. But here, we will only implement a single qubit classifier.

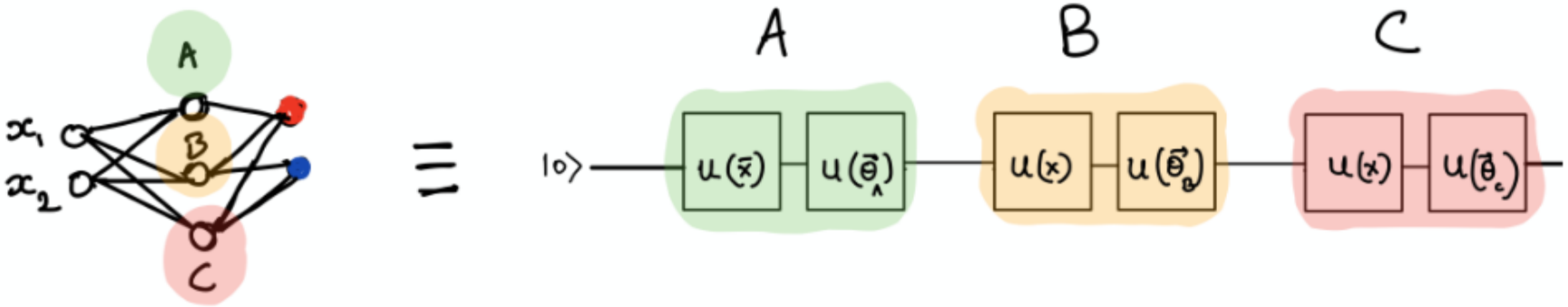

Neural	Data reuploading
Weights are W	Weights are P
3 neuron	Neuron in form of different block of data reuploading

Pérez-Salinas, Adrián, Alba Cervera-Lierta, Elies Gil-Fuster, and José I. Latorre. "Data re-uploading for a universal quantum classifier." *Quantum* 4 (2020): 226.

TCS Confidential

Proposed: Quantum data reuploading(DRC) : Multi qubit

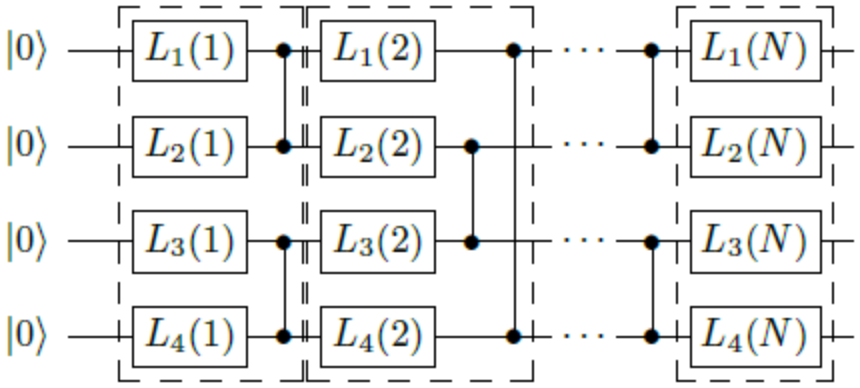

(b) Ansatz with entanglement

Four-qubit quantum classifier circuits[8]

Modified DRC

Input
X (X1;X2;X3)

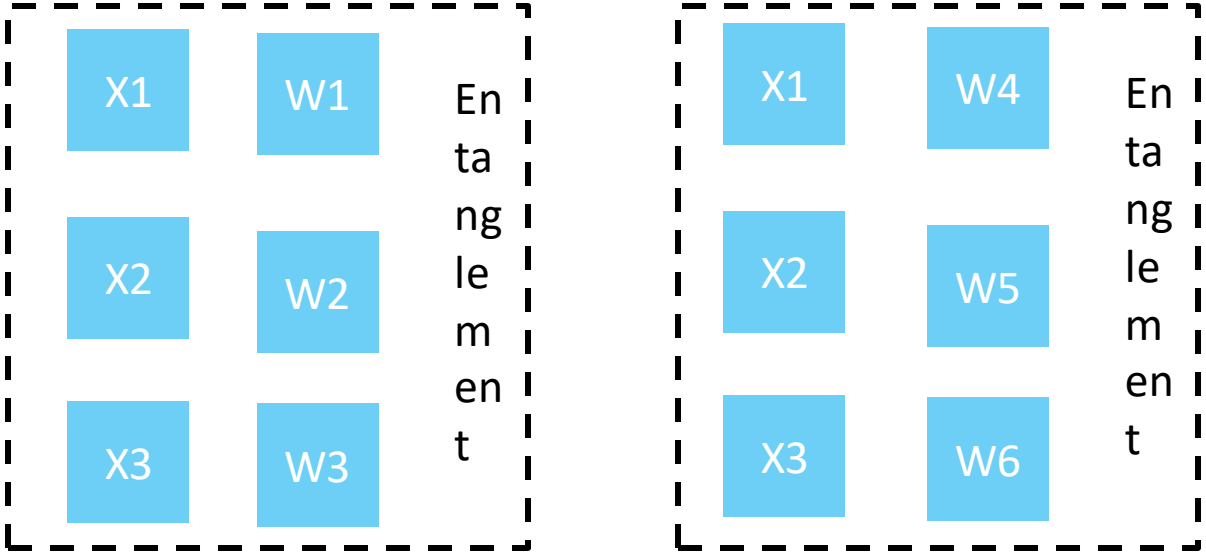

TCS Confidential

Proposed : Quantum LSTM:DRC and Quantum NN:DRC

Quantum LSTM

QLSTM : VQC

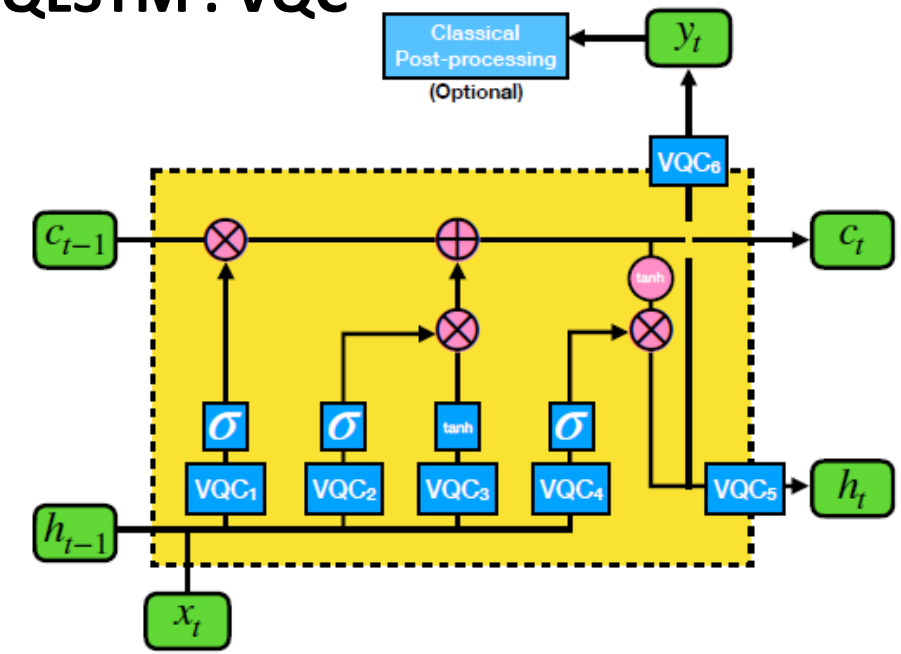

QLSTM : DRC

VQC -> DRC

Quantum NN

Implement using Keras and Pennylane

QNN : DRC

Classical Neural network layers

DRC

Classical Neural network layers

OR

DRC

TCS Confidential

Architecture

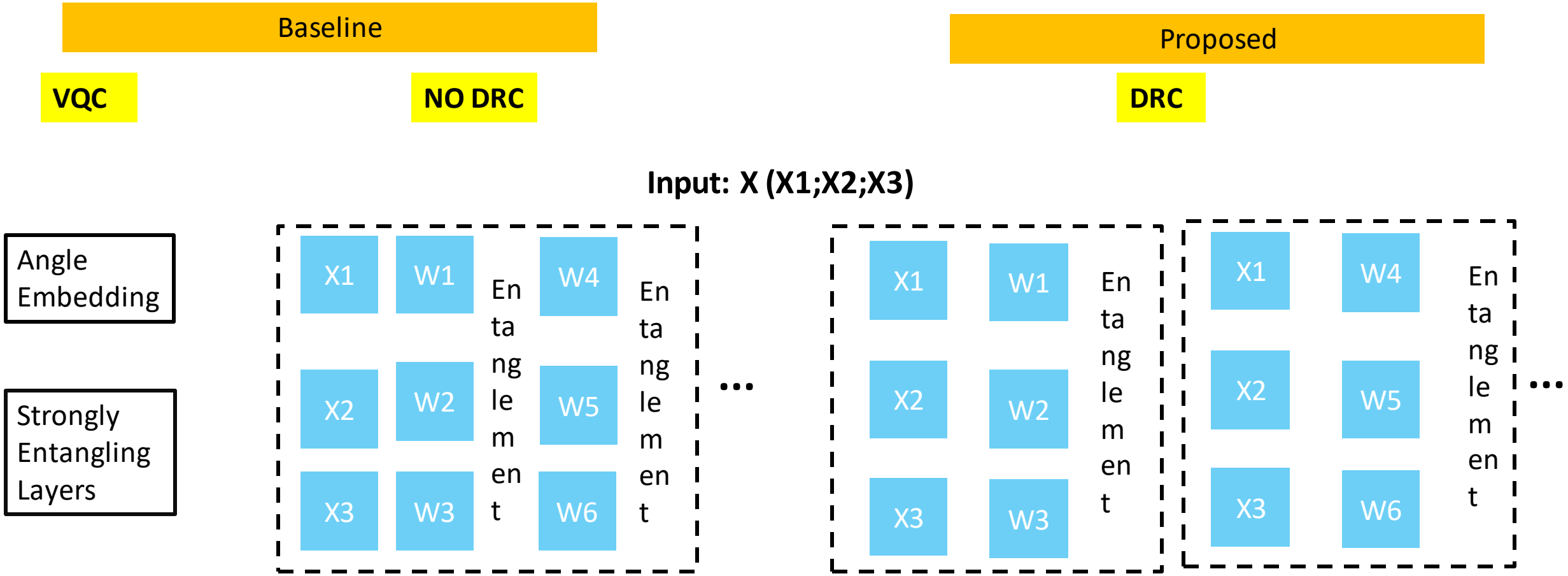

All architecture contain 18 weights/learning parameters

TCS Confidential

Initial experimentation

300 data samples

Model (epochs)	MAE: Train	MAE: Test	RMSE: Train	RMSE: Test
QLSTM: VQC(40)	59.52	64.37	79.30	82.65
QLSTM: NODRC(40)	51.47	54.05	68.49	70.19
QLSTM: DRC(30)	45.04	45.72	61.81	60.53
QNN: NODRC(15)	28.42	30.29	38.15	40.45
QNN: DRC (15)	26.73	26.26	35.23	36.08
QNN:VQC (20)	35.56	32.16	45.37	42.41

QNN:DRC performed good

TCS Confidential

Initial experimentation :Loss curve

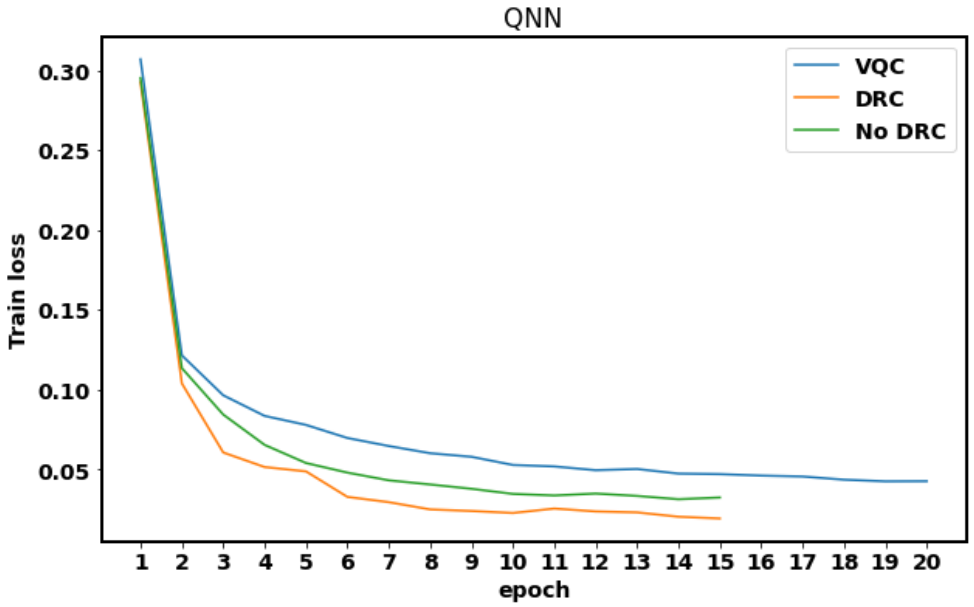

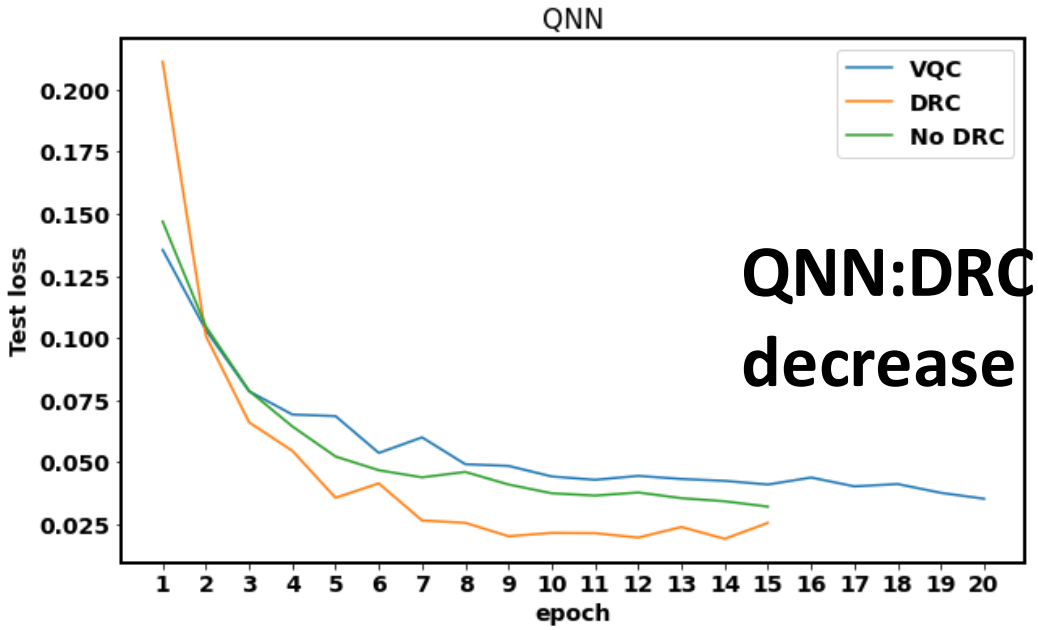

QNN:DRC loss decrease more

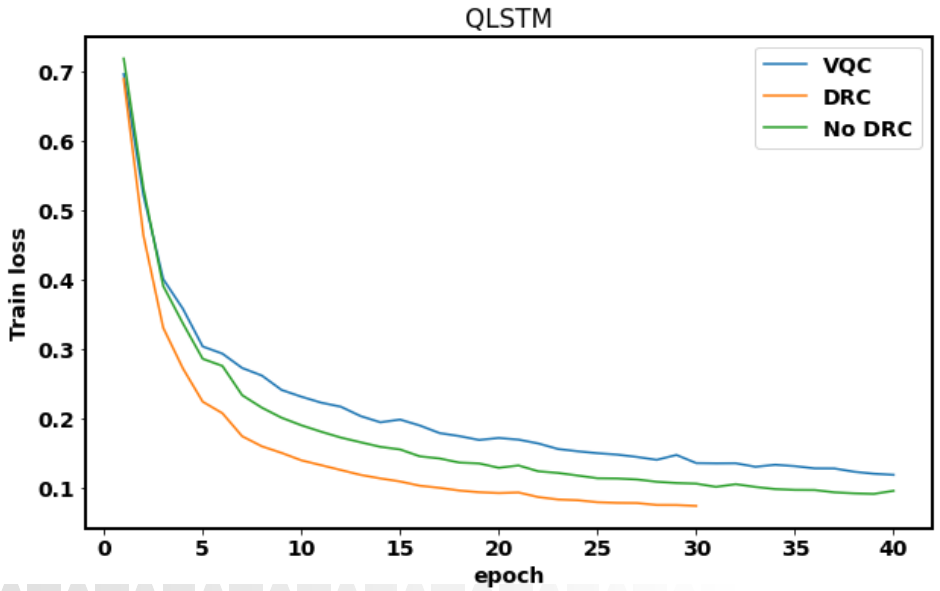

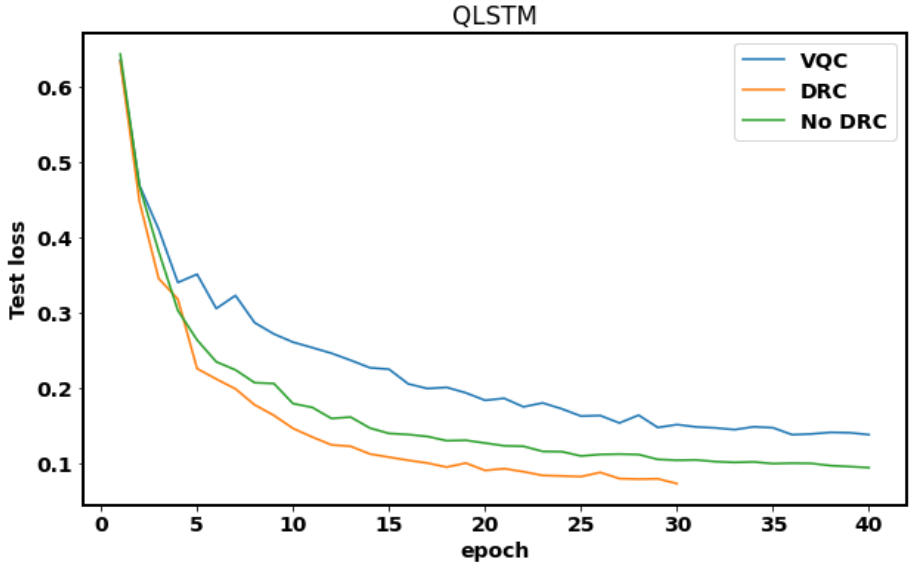

TCS Confidential

Next 14 days prediction

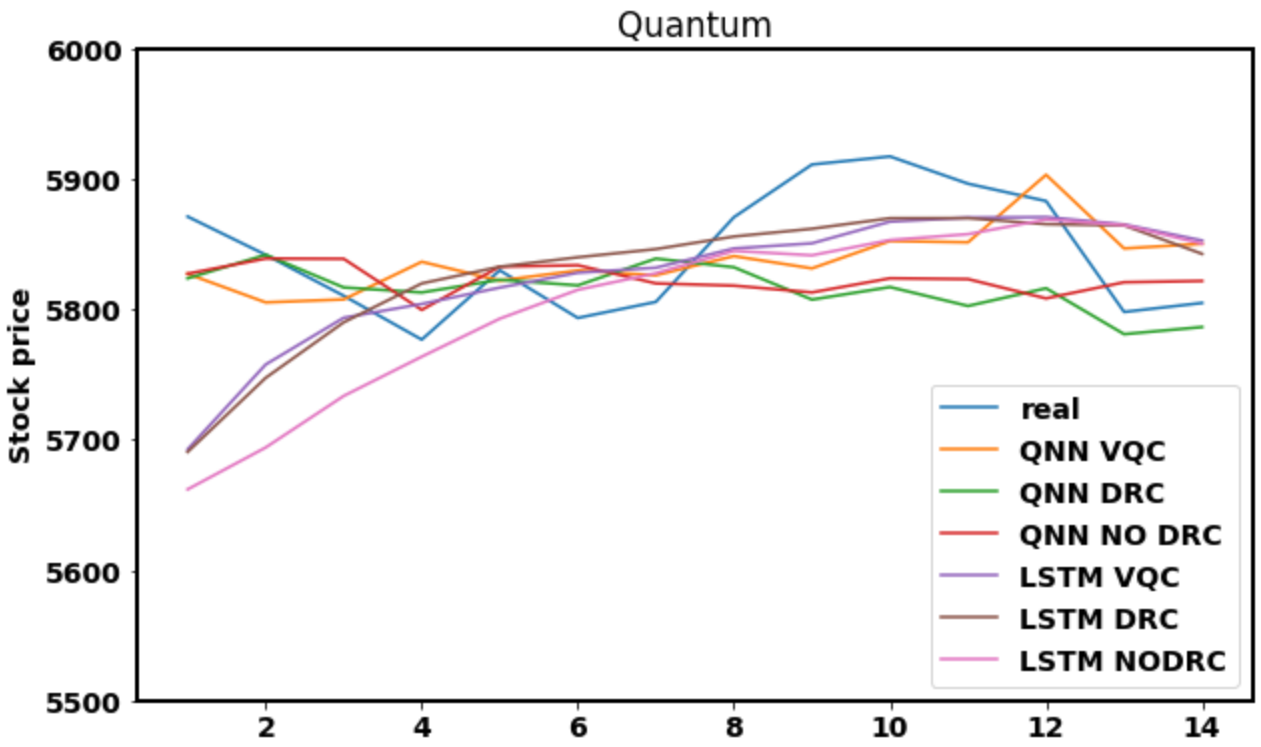

Model (epochs)	MAE: Check	RMSE: Check
QLSTM: VQC(40)	47.73	63.43
QLSTM: NODRC(40)	60.82	80.94
QLSTM: DRC(40)	49.09	65.04
QNN: NODRC(15)	41.89	52.02
QNN: DRC(**15**)	42.37	54.42
QNN:VQC(20)	38.62	43.83

QNN:DRC performed good

QLSTM: DRC will be computationally expensive as it has four gates(forgot, input...)

TCS Confidential

AWS estimate

- Run QNN:DRC for 360 samples and 1 epoch on AWS braket sv1 : 360 task consume approx. 1.35 dollar

QNN:DRC

- Using Data generation 1 approach : 18480 (Approximate tasks)* assume 30 (epochs)
- Cost = approx. 2138 dollar

This is preliminary cost for single run that can increase as per epoch needed and further experimentation.

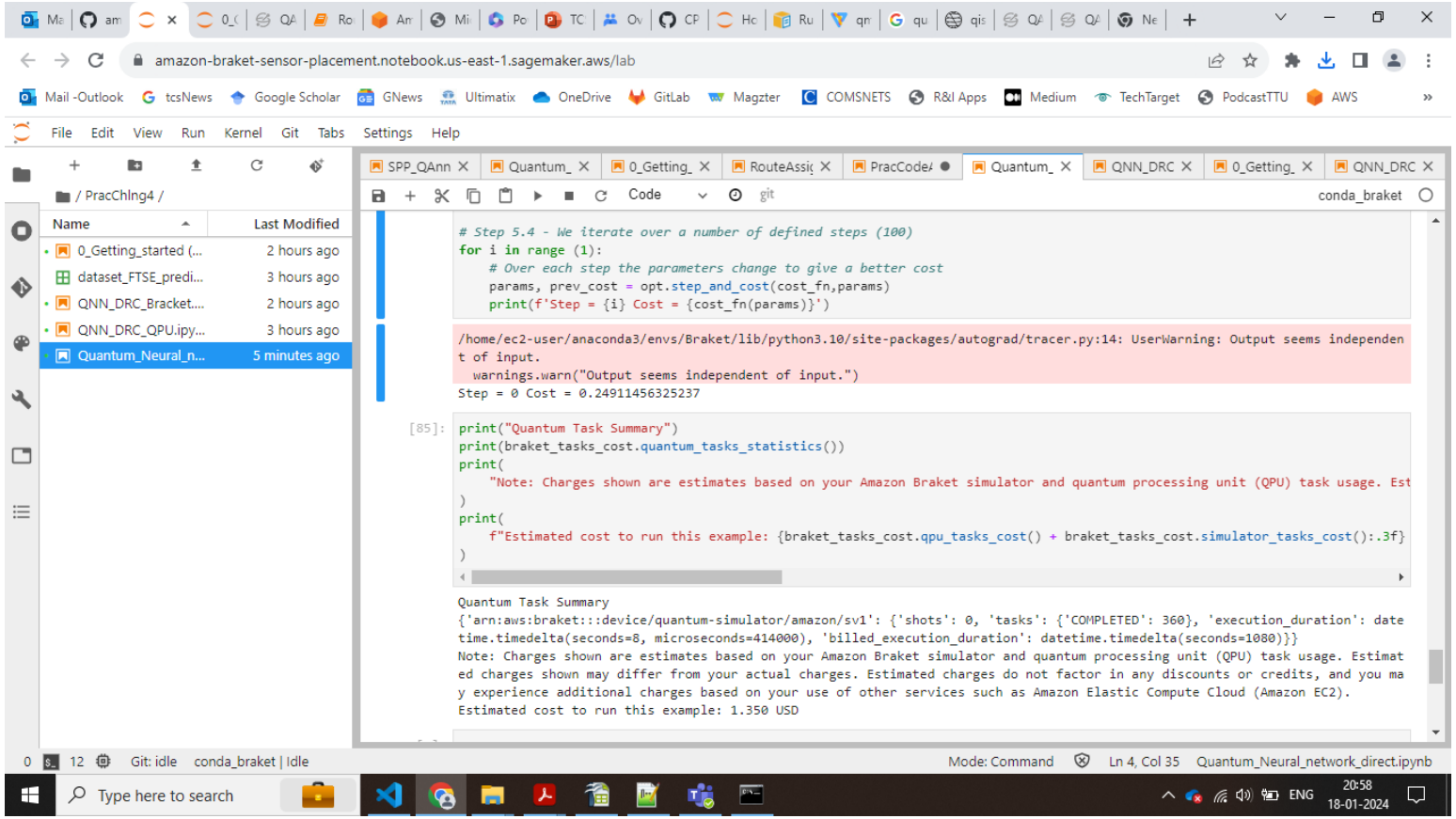

TCS Confidential

Next step

- Fine tune classical models: Batch size, number of layers etc.
- Fine tune quantum model: No. of qubits, number of layers etc.
- Apply dimensionality reduction
- Run Quantum models QNN:DRC on more epochs.
- Right now, we used mean normalization, check min max normalization
- Use monthly data also in the analysis

TCS Confidential

Reference

1. Moghaddam, Amin Hedayati, Moein Hedayati Moghaddam, and Morteza Esfandyari. "Stock market index prediction using artificial neural network." *Journal of Economics, Finance and Administrative Science* 21, no. 41 (2016): 89-93.
2. Oukhouya, Hassan, and Khalid El Himdi. "Comparing machine learning methods—svr, xgboost, lstm, and mlp—for forecasting the moroccan stock market." In *Computer Sciences & Mathematics Forum*, vol. 7, no. 1, p. 39. MDPI, 2023.
3. Kobiela, Dariusz, Dawid Krefta, Weronika Król, and Paweł Weichbroth. "ARIMA vs LSTM on NASDAQ stock exchange data." *Procedia Computer Science* 207 (2022): 3836-3845.
4. Xiao, Ruochen, Yingying Feng, Lei Yan, and Yihan Ma. "Predict stock prices with ARIMA and LSTM." *arXiv preprint arXiv:2209.02407* (2022).
5. Dharwad, I. I. I. T. "The Potential of Quantum Techniques for Stock Price Prediction."
6. Kaushik, Payal, Sayantan Pramanik, M. Girish Chandra, and C. V. Sridhar. "One-Step Time Series Forecasting Using Variational Quantum Circuits." *arXiv preprint arXiv:2207.07982* (2022).
7. Emmanoulopoulos, Dimitrios, and Sofija Dimoska. "Quantum machine learning in finance: Time series forecasting." *arXiv preprint arXiv:2202.00599* (2022).
8. Chen, Samuel Yen-Chi, Shinjae Yoo, and Yao-Lung L. Fang. "Quantum long short-term memory." In *ICASSP 2022-2022 IEEE International Conference on Acoustics, Speech and Signal Processing (ICASSP)*, pp. 8622-8626. IEEE, 2022.
9. Pérez-Salinas, Adrián, Alba Cervera-Lierta, Elies Gil-Fuster, and José I. Latorre. "Data re-uploading for a universal quantum classifier." *Quantum* 4 (2020): 226.

TCS Confidential

Thank you, Any questions ?

TCS Confidential

Example training and testing time series data

	X(features): Data features + Technical indicators					Y(target): Close price
Train and Test						
	…	…	…	…	…	…
	…	…	…	…	…	…
Check: Next predictions						

TCS Confidential