G 70

BJT - Amplifier

$\sqrt{16} =$
a) ± 4
b) $+4$
c) -4
d) NOB

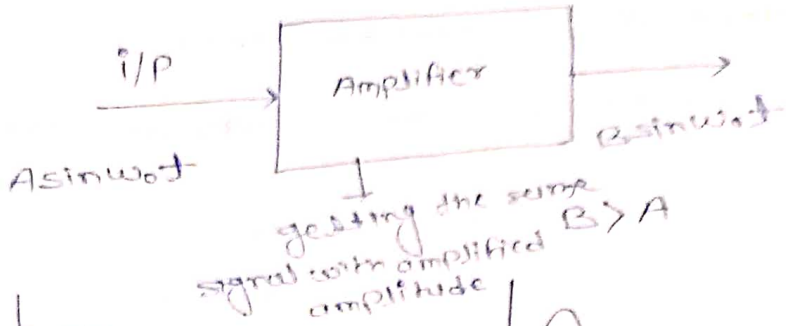

$x^2 = 16$

$x = \pm\sqrt{16}$

$= \pm 4$

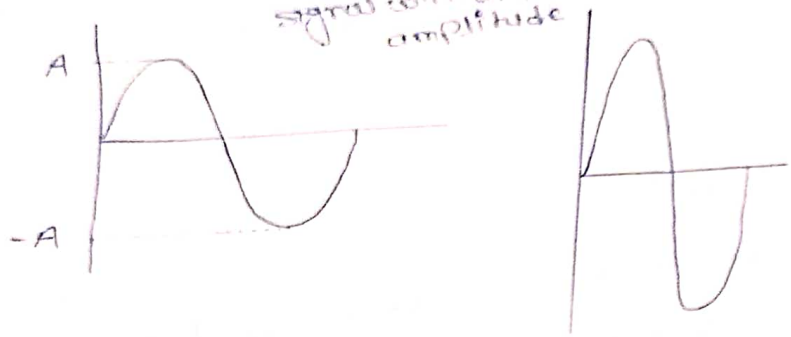

eg:- $\sqrt{x^2} = |x|$

eg:- $\sqrt{(-4)^2} = |-4| = 4$

1) The main purpose of Amplifier is to amplify or increase amplitude of i/p signal without changing its frequency.

2)

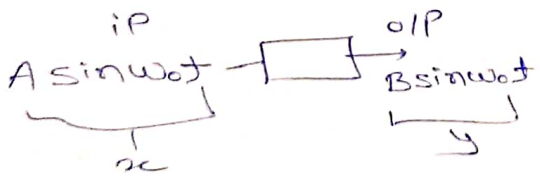

$\Rightarrow y = Kx \quad |K| > 1$

$= KA\sin\omega_0 t = B\sin\omega_0 t$

Amplifier should always have linear characteristic.

e.g if $y = Kx^2$

$y = K(A\sin\omega_0 t)^2$

$= \frac{KA^2}{2}(2\sin^2\omega_0 t) = \frac{KA^2}{2}(1 - \cos 2\omega_0 t)$ → different signal than i/P.

$$y = K_1 x + K_2 x^2 + K_3 x^3 \ldots$$

$K_1 A \sin\omega_0 t$ $\quad 2\omega_0 \quad 3\omega_0$

$\boxed{K = -2}$

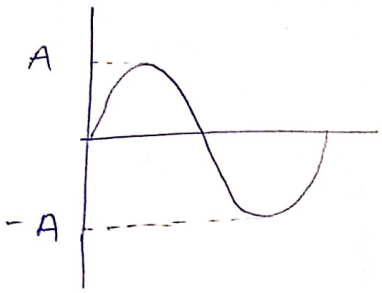

$\frac{A^2}{2}$

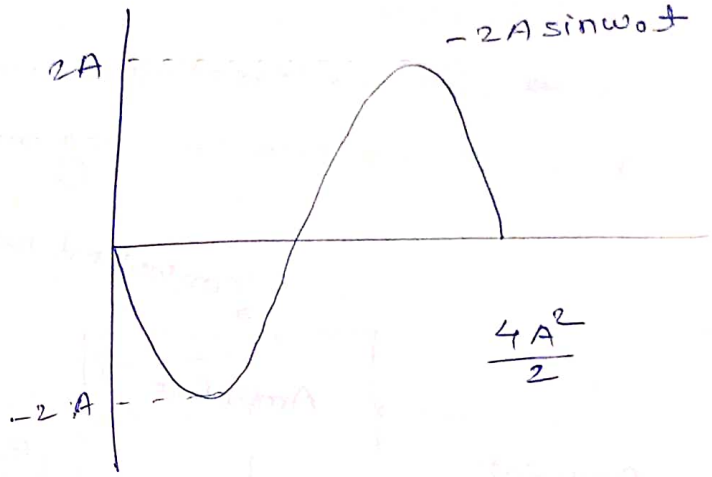

$\frac{4A^2}{2}$

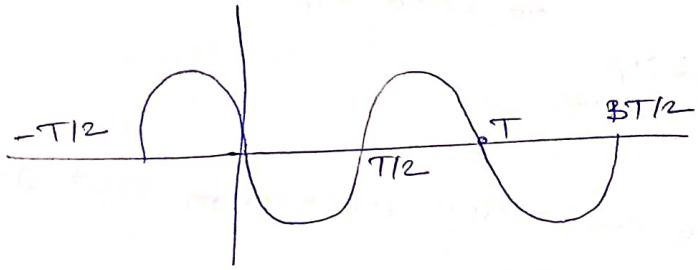

$A \sin\omega_0 t \rightarrow A \sin[\omega_0 (t - T/2)]$

$T/2 \rightarrow$ delay

$A \sin[\omega_0 t - \omega_0 T/2]$

$\omega_0 = \frac{2\pi}{T}$

$\omega_0 T = 2\pi$

$A \sin[\omega_0 t - \pi]$

$$y = k_1 x + \underbrace{k_2 x^2 + k_3 x^3 + \dots}_{\text{harmonic distortion}}$$

$$\boxed{|k_1| > 1}$$

$k = -3 \rightarrow$ inverting amplifier

$k = 3 \rightarrow$ non-inverting amplifier

4)

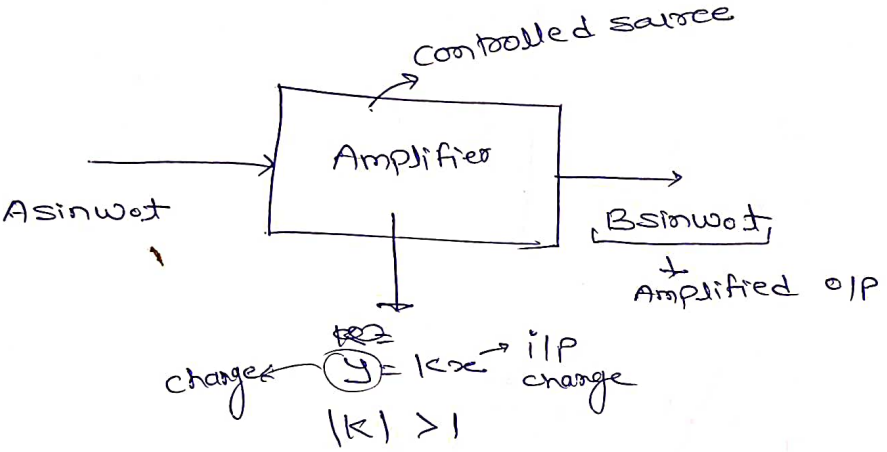

4) My amplifier should have controlling mechanism that should have property of controlled source
(ie CCCS, VCCS, VCVS, CCVS)

BJT is current controlled current source

BJT as an amplifier

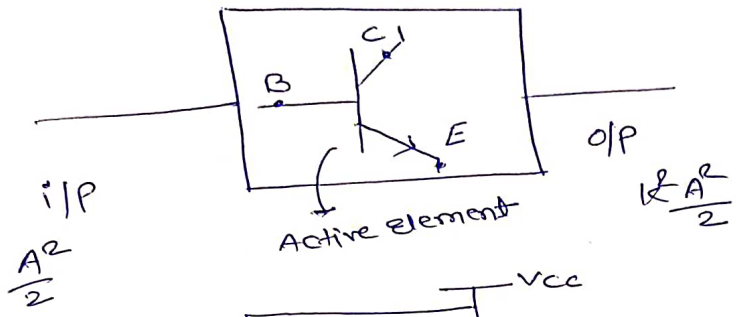

AC → Analysis
(hybrid π model)

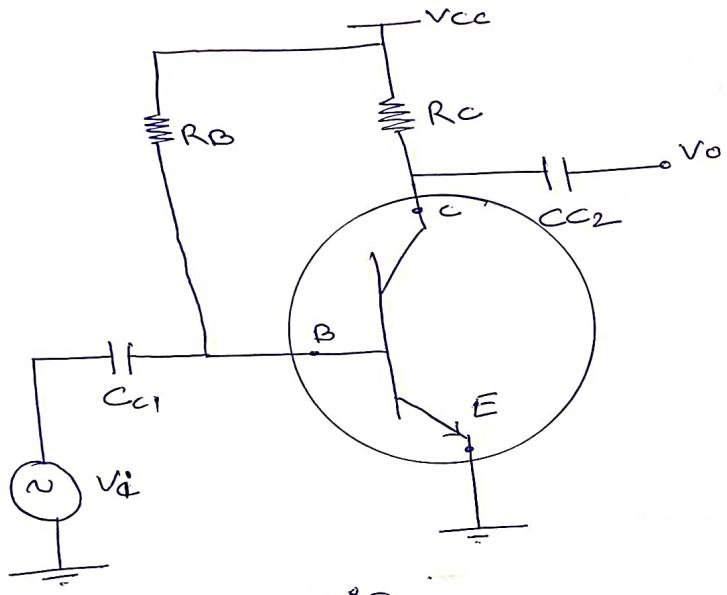

AC Analysis
DC Analysis

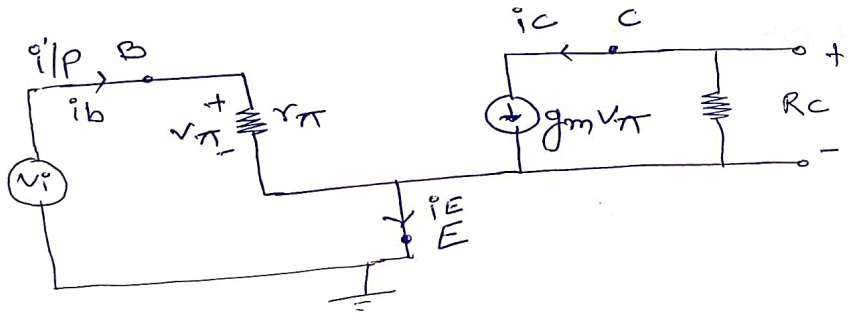

$i_b = \frac{v_i}{r_\pi}$

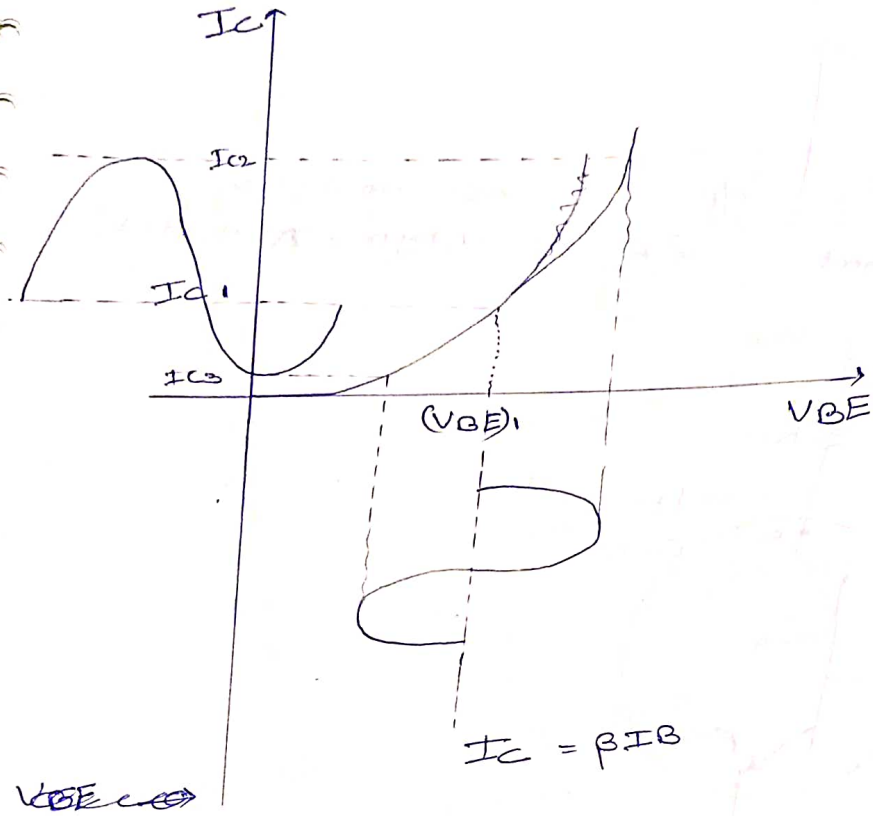

$V_{BE} \rightarrow I_B \rightarrow$ non-linearly

$$I_C = \beta I_B$$

$$I_B = \frac{I_0}{\beta} e^{V_{BE}/V_T}$$

$$I_B \beta = I_C = I_0 e^{V_{BE}/V_T}$$

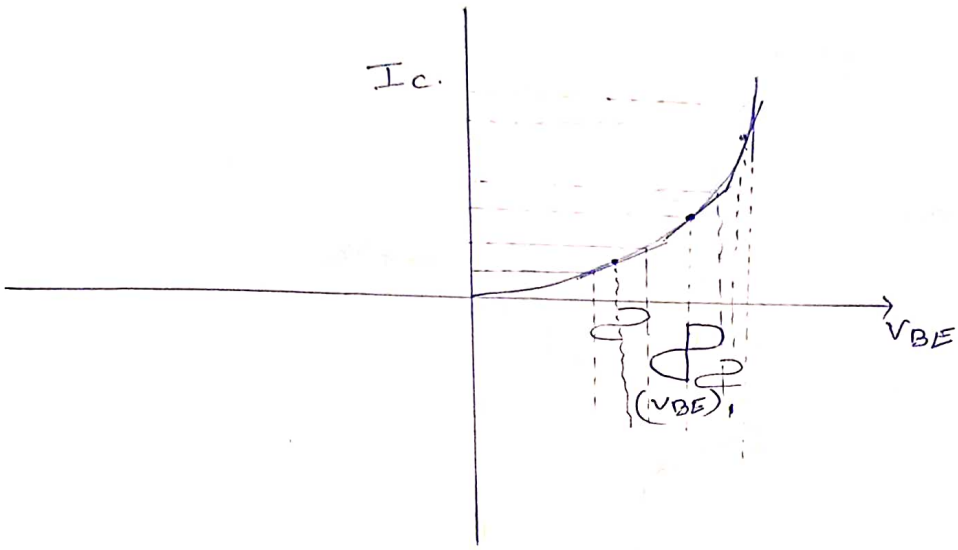

Small signal applied i/p is having small amplitude (E)

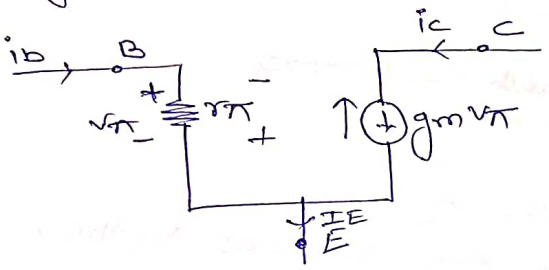

low frequency model

$$r_\pi = \frac{\beta V_T}{I_C} = \frac{V_T}{I_B}$$

$$g_m = \frac{I_C}{V_T}$$

$$g_m \cdot r_\pi = \frac{\beta \cancel{V_T}}{\cancel{I_C}} \times \frac{\cancel{I_C}}{\cancel{V_T}}$$

$$\boxed{g_m \cdot r_\pi = \beta}$$

$$g_m v_\pi = g_m \cdot i_b r_\pi$$
$$= \beta i_b$$

DC & AC Equivalent circuit :-

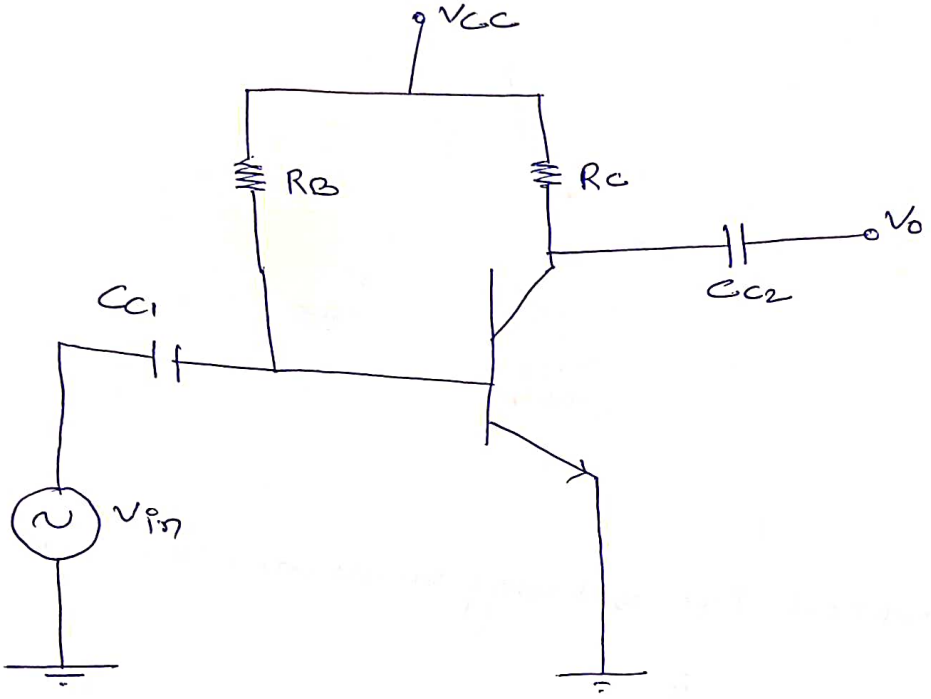

C_{c1} & C_{c2} → coupling ~~circuit~~ capacitors

DC equivalent :→

1) Replace all ~~the~~ the capacitors by DC
2) Replace all the ~~capacitors~~ A.C. sources by their internal resistances.

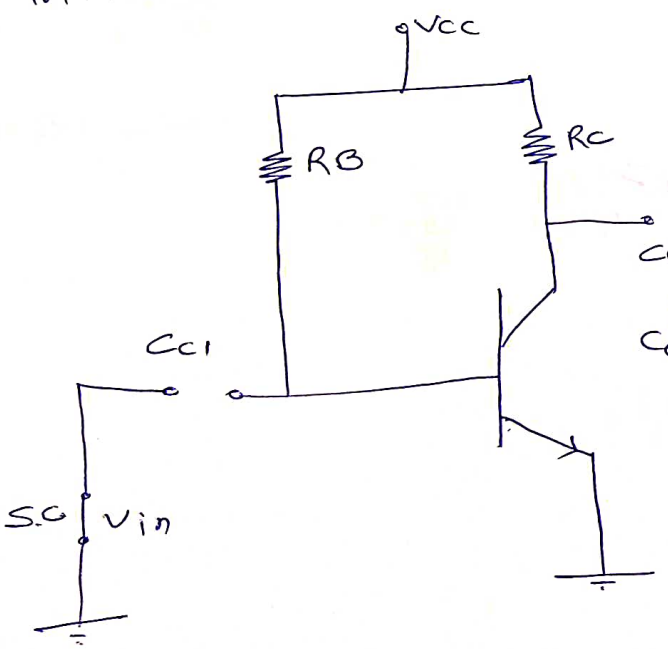

$\frac{1}{C_{c1}}$ & C_{c2} → very high

$\frac{1}{j\omega C_{c2}}$

$\frac{1}{0 C_{c2}} = \frac{1}{0} = \infty$

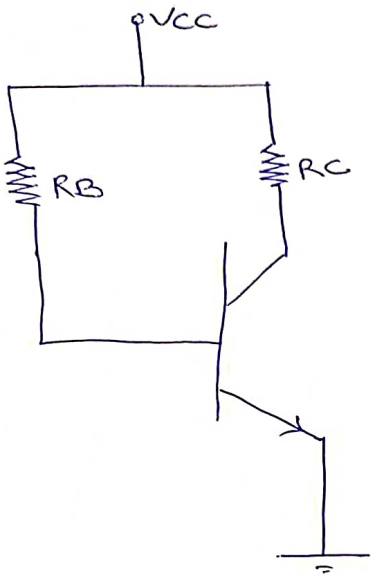

AC Equivalent :-

1) Replace all the capacitors by S.C.

2) All the DC sources are replaced by their internal resistances.

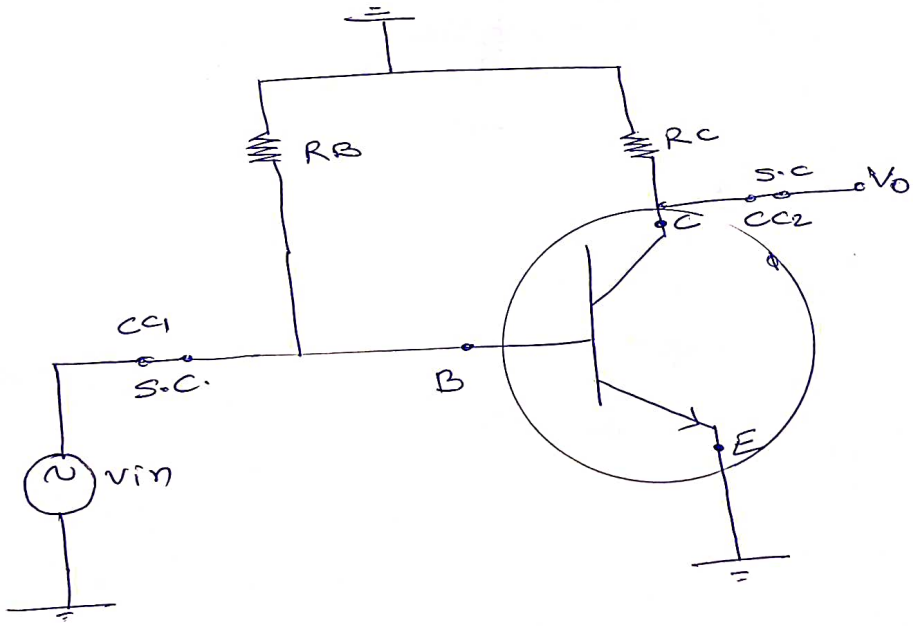

Ac hybrid modal

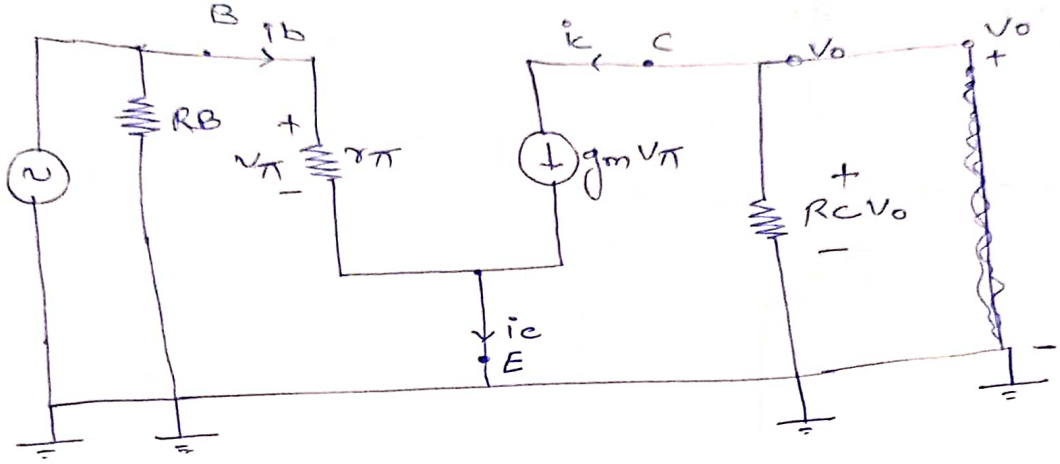

Q)

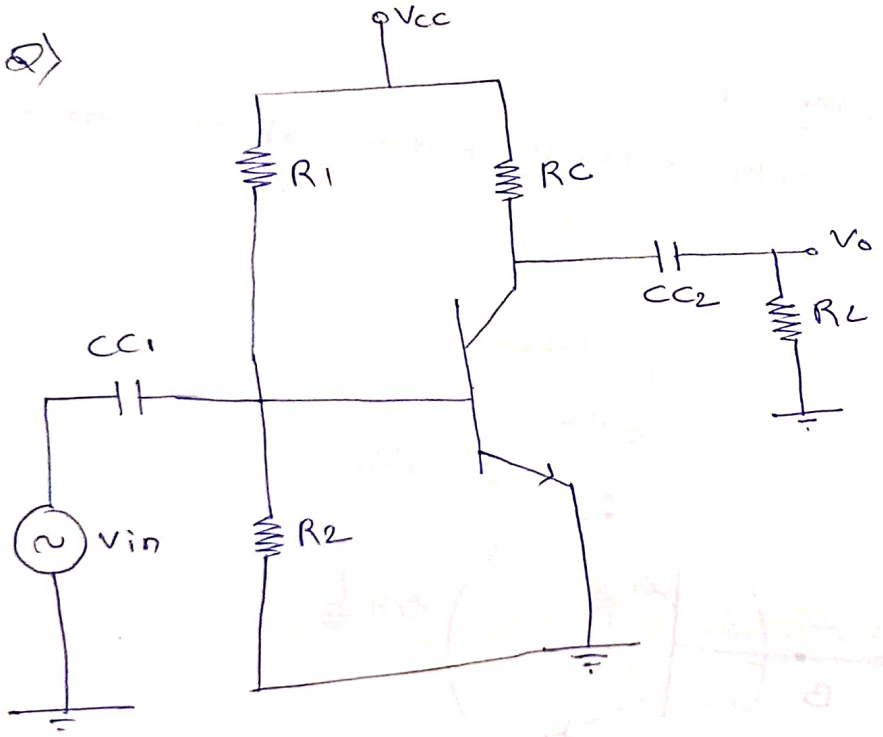

DC Equivalent

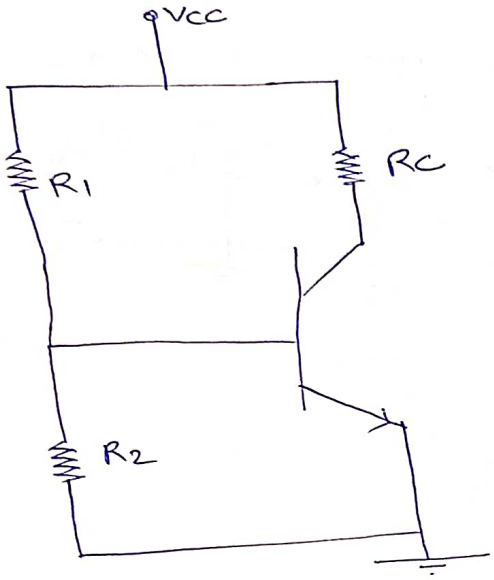

AC Equivalent

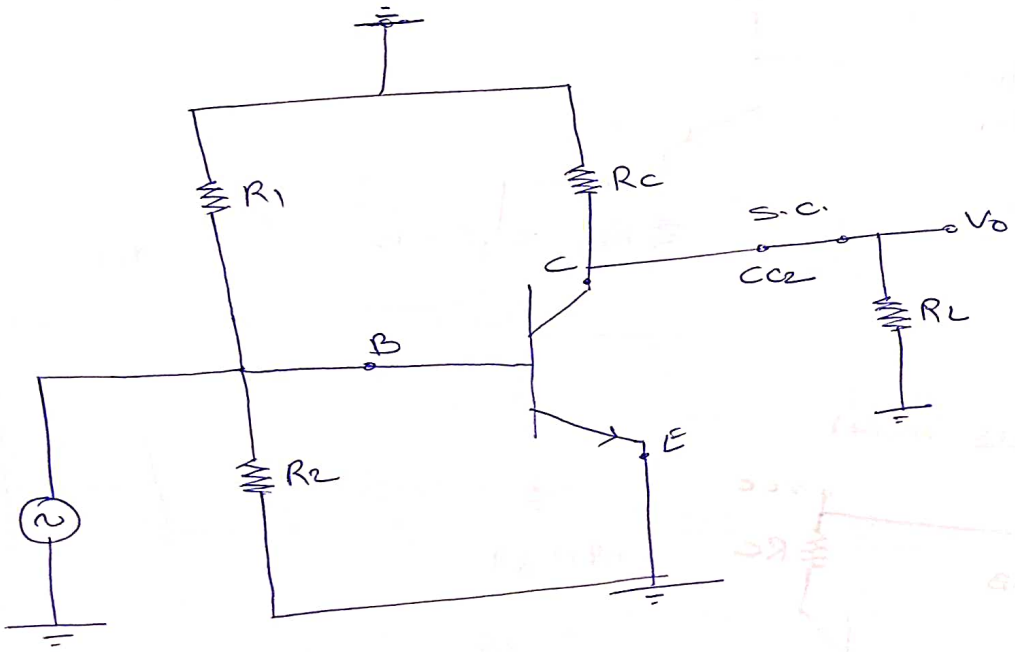

AC Equivalent ckt convert into hybrid π model

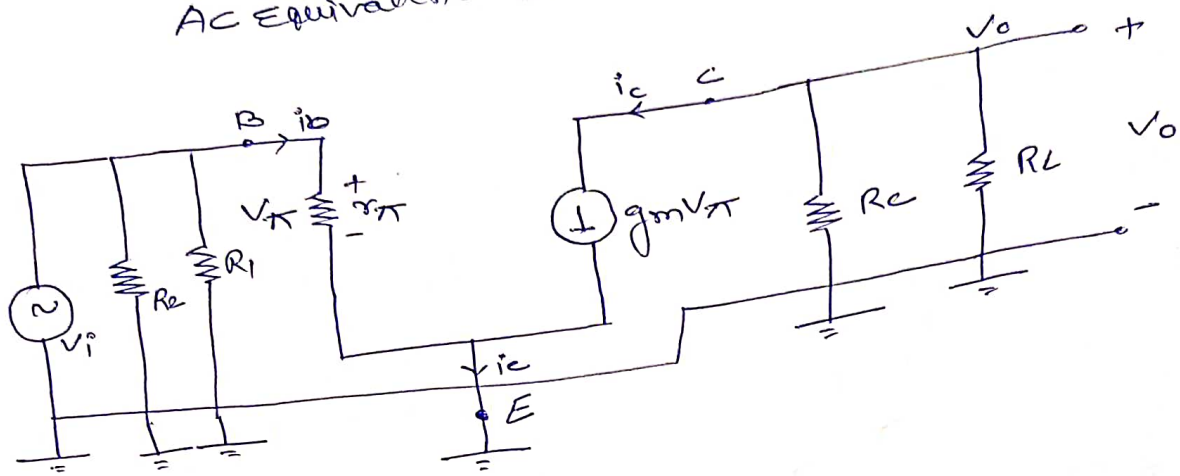

Q)

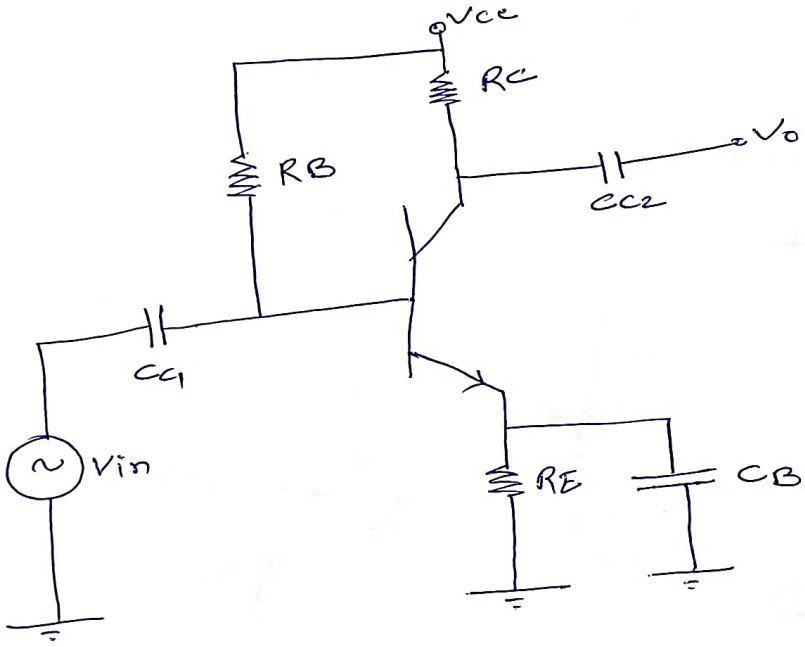

DC analysis model

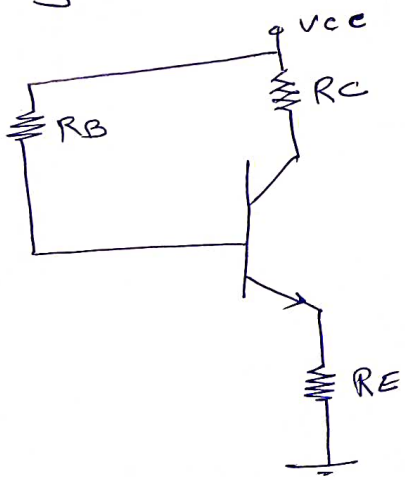

AC analysis

AC Equivalent

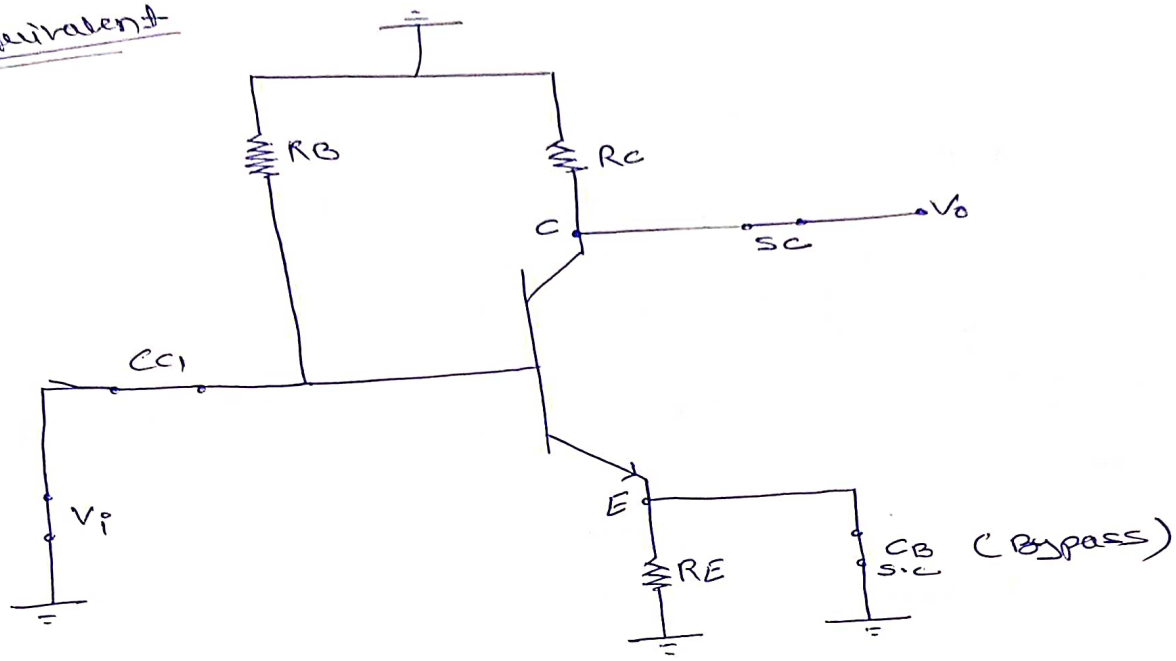

Hybrid π model

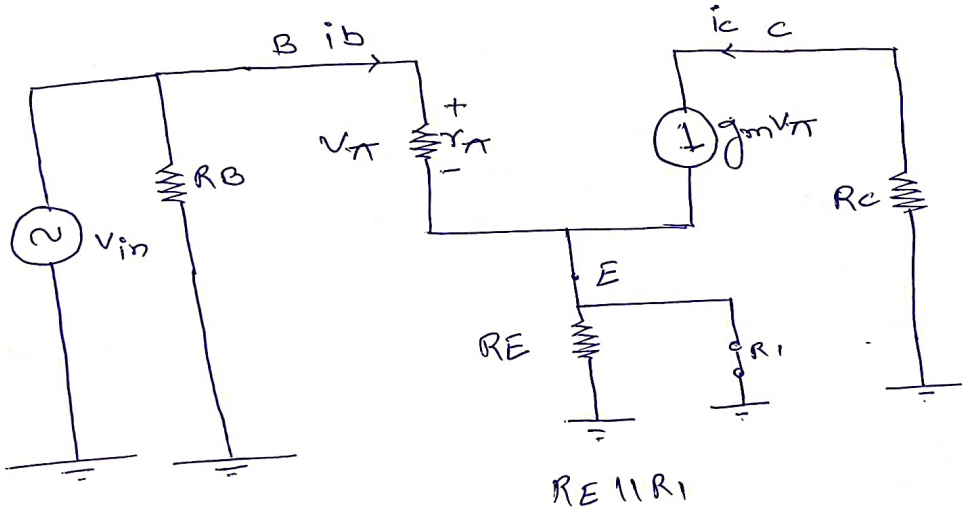

$$R_E \parallel R_1$$

$$= \frac{R_E \cdot R_1}{R_E + R_1}$$

$$= \frac{0}{R_E + 0}$$

$$= 0$$

Significance of coupling capacitor :-

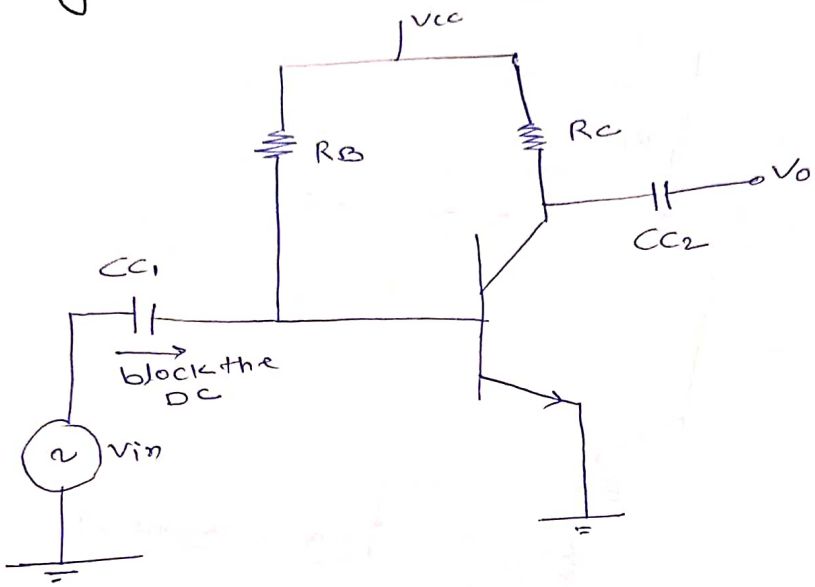

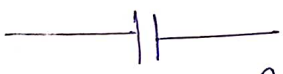

Pass the AC
block the DC

→ Coupling capacitors are use to couple (link) the AC and block the DC component because DC component is like noise for our ~~desmibed~~ desired AC signal and if it is these with AC signal them. it degrade the quality.

Significance of bypass capacitor

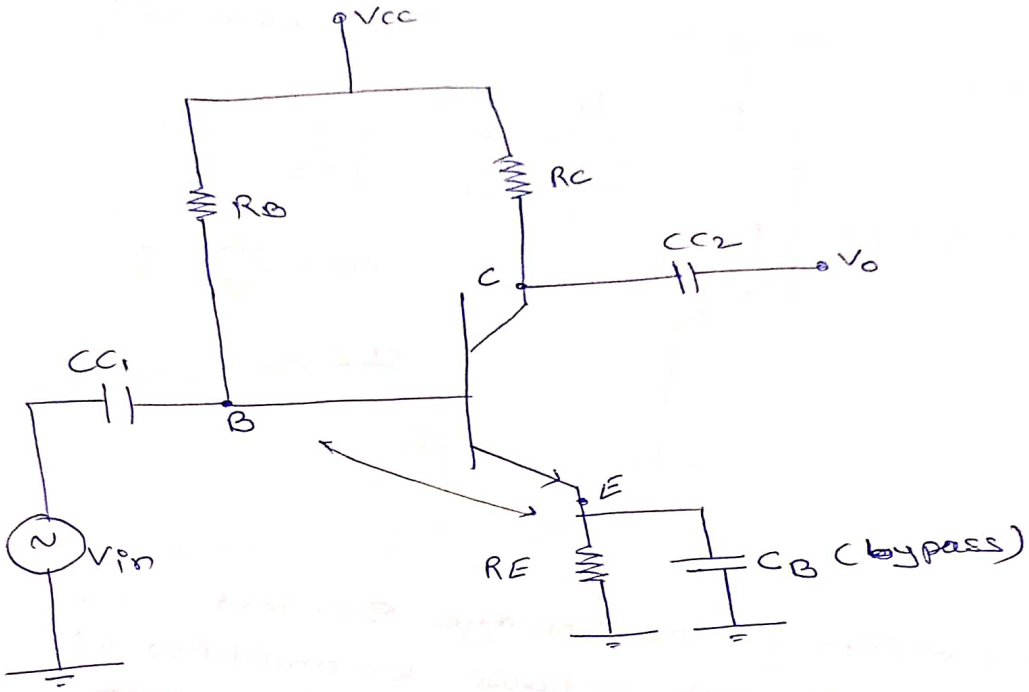

operating point $I_C = I_0 e^{V_{BE}/V_T}$

RE → To stabilize the DC operating point I_C against temp.

RE is behave as a negative feedback in AC ckt.

and its decreases the gain.

Conclusion:-

- ~~bypass capacitor is used~~

1) due to use of bypass capacitor CB resistance RE (FB Resistance) is intact in the DC ~~th~~ and ~~thus~~ does stabilies the DC operating point I_C. while in the AC model this RE Resistance in bypassed by bypass capacitor CB and ~~this~~ thus RE Resistance is not intact in AC model ~~A~~ and ~~does~~ does not decrease the AC gain of the amplifier.

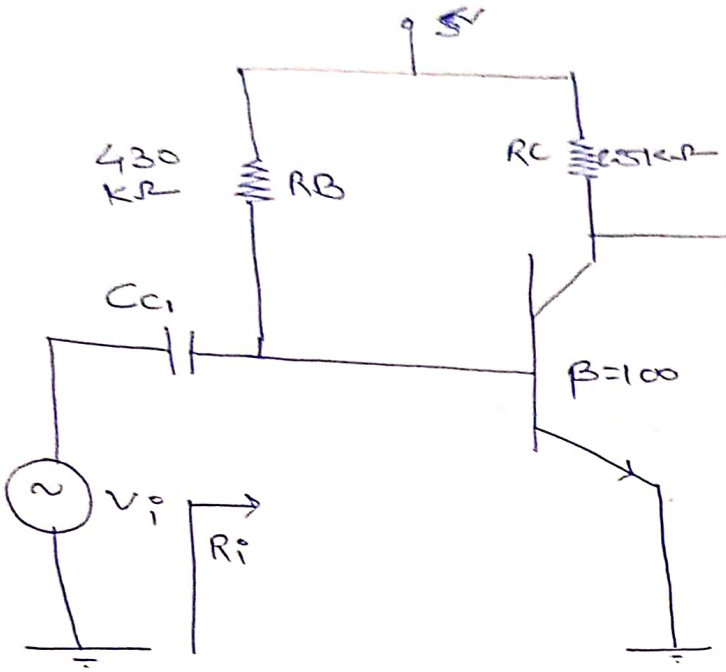

$(V_{BE}) = 0.7V$

$V_T = 25$ mvolt

$A_V = \frac{V_o}{V_i}$?

$I_C = ?$

Sol:- Jb bhi amplifier ka Question aye B.C. test ki koi zarurat hi nahi because wo amplifier ki tarh kaam krta hai to wo active hoga (ON hoga)

① DC analysis

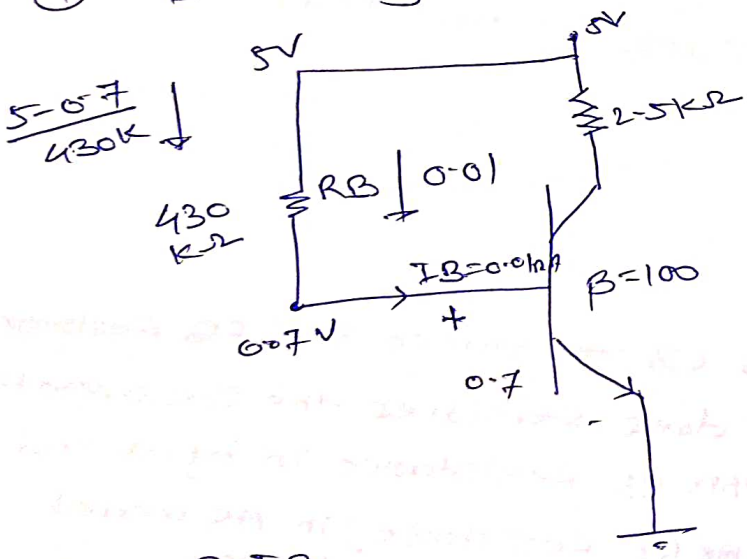

$I_C = \beta I_B$

$\boxed{I_C = 1mA}$

D) AC analysis

$$r_\pi = \frac{V_T}{I_B} = \frac{0.025}{0.01} = 2.5\,k\Omega$$

$V_T = 25\,mVolt$

$$g_m = \frac{I_C}{V_T} = \frac{1\,m}{0.025} = 40\,mA/V$$

AC Equivalent model

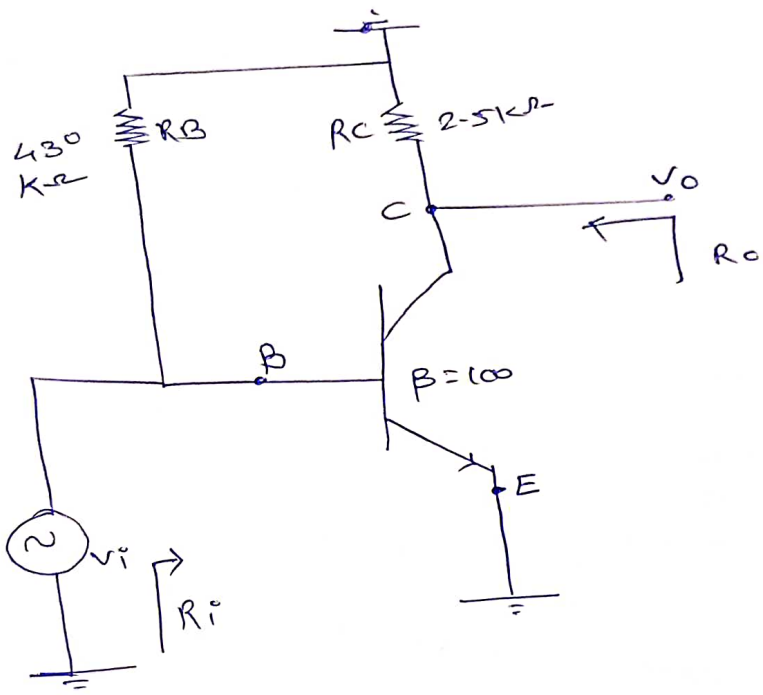

π (pi) model

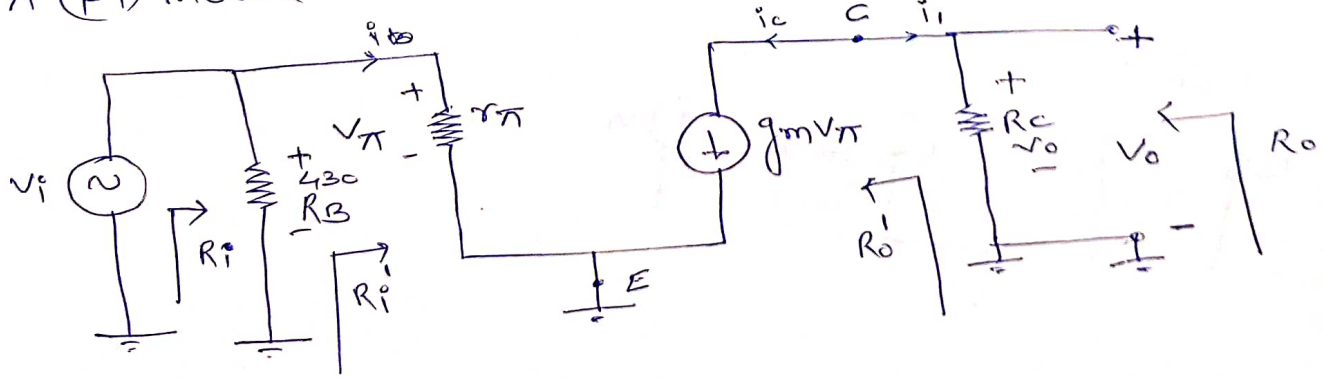

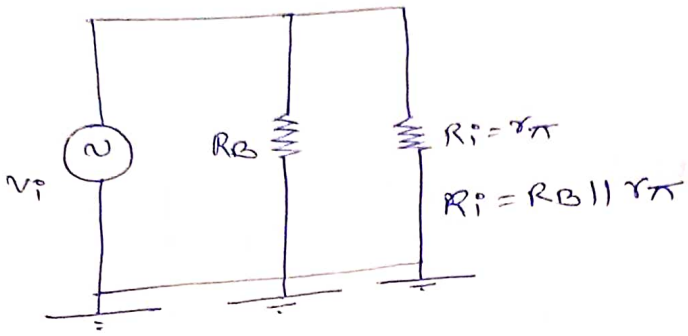

$\boxed{R_i = R_B \| r_\pi}$, $V_B = V_\pi$

$V_o = i_1 R_C$

$V_o = i_1 R_C = -i_c R_C$

$V_o = -g_m V_\pi R_C$

$\frac{V_o}{V_\pi} = -g_m R_C$ —(i)

$A_V = \frac{V_o}{V_i} = \frac{V_o}{V_\pi} \cdot \frac{V_\pi}{V_i}$ —(ii)

$V_i = V_B = V_\pi$

$A_V = -g_m R_C \cdot \frac{V_i}{V_i} = -g_m R_C = -40 \times 2.5 = -100$

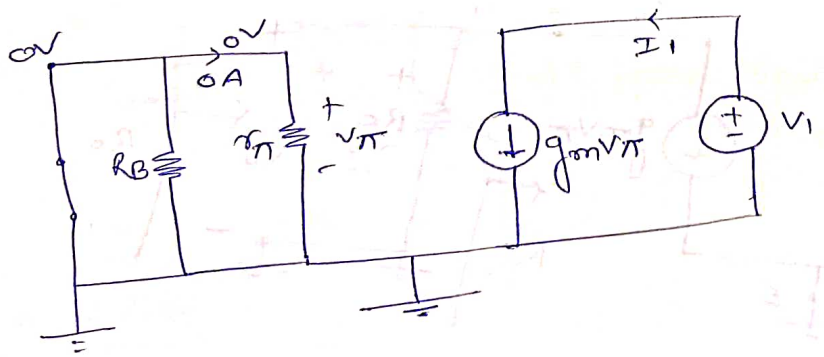

$\boxed{V_\pi = 0}$

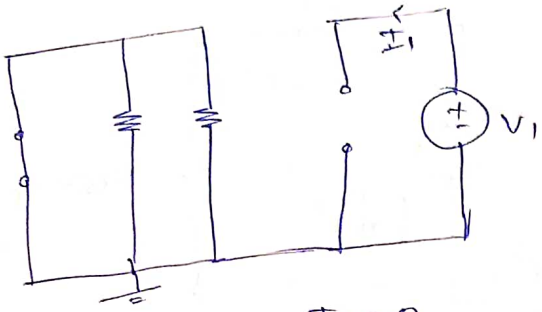

$I_1 = 0$

$R_o' = \frac{V_1}{I_1} = \infty$

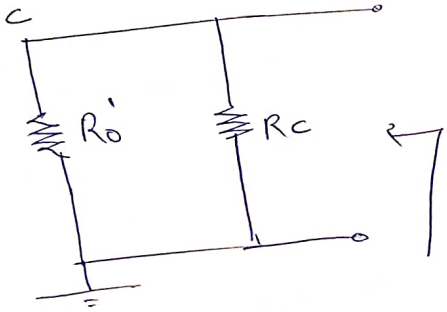

$R_o = R_o' \parallel R_C$

$\boxed{R_o = R_C}$

Q)

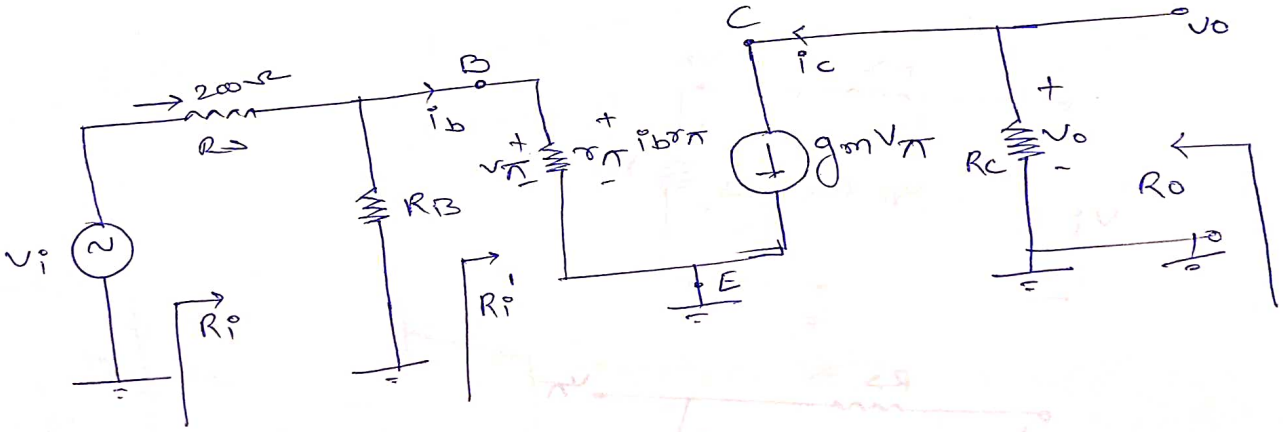

$R_i' = \frac{V_B}{i_b} = \frac{V_\pi}{i_b} = \frac{i_b r_\pi}{i_b}$

$\boxed{R_i' = r_\pi}$

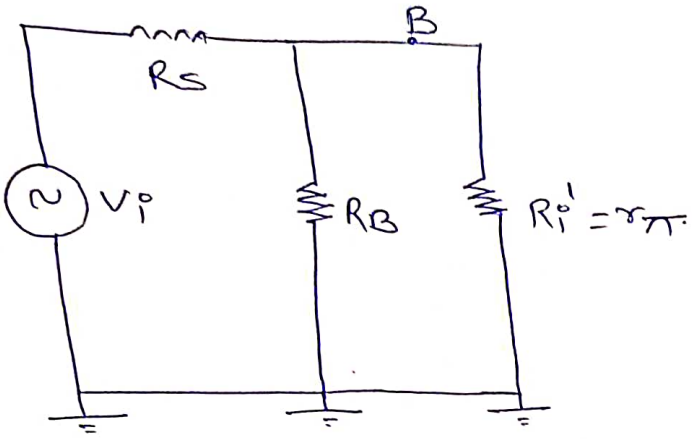

≡

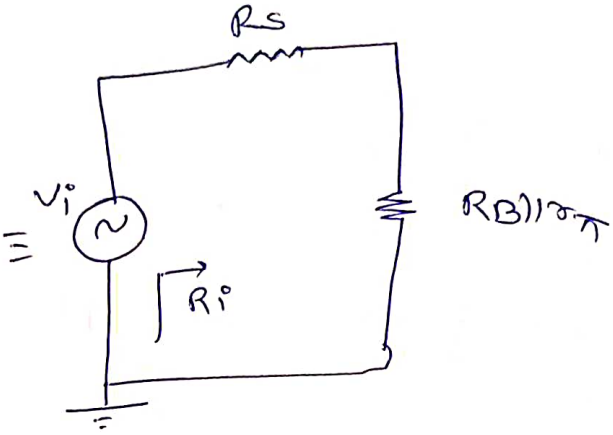

$$\boxed{R_i = R_s + R_B \| r_\pi}$$

$$V_o = i_1 R_C = -i_C R_C$$

$$\boxed{V_o = -g_m V_\pi R_C}$$

$$\frac{V_o}{V_\pi} = -g_m R_C \quad \text{—} (1)$$

$$A_V = \frac{V_o}{V_i} = \frac{V_o}{V_\pi} \cdot \frac{V_\pi}{V_i}$$

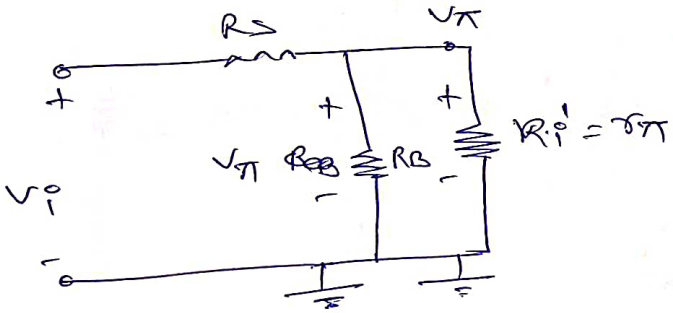

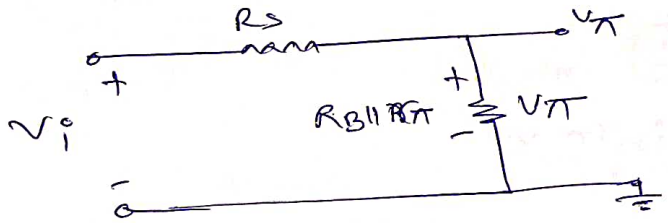

$$V_\pi = \frac{R_B \| r_\pi}{R_s + R_B \| r_\pi} V_i$$

$$\frac{V_\pi}{V_i} = \frac{R_B \| r_\pi}{R_S + R_B \| r_\pi}$$

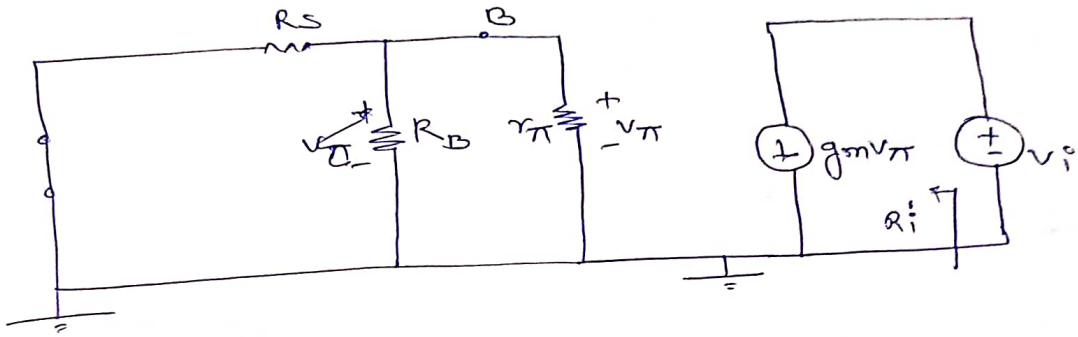

$$V_\pi = \frac{R_B \| r_\pi}{(R_B \| r_\pi + R_S)} V_i$$

$$\boxed{V_\pi = 0}$$

H.W

Q)

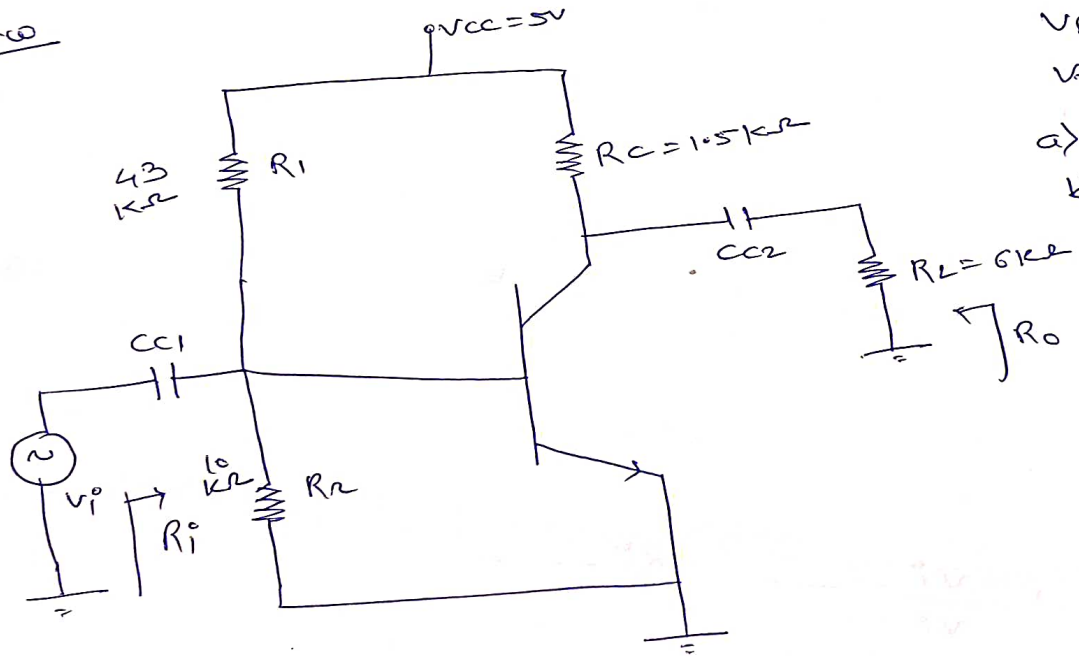

$V_{BE} = 0.7V$

$V_T = 25mA$

a) $\beta = 100$

b) $\beta =$ very high X

a) $I_C = 3mA$, $r_\pi = \frac{2.5}{3}$ kΩ

$g_m = 120 mA/V$

$\frac{V_o}{V_i} = -g_m(R_C \| R_L) = -120 \times 1.2$
$= -144$

$R_i = R_1 \| R_2 \| r_\pi$

$R_o = R_C \| R_C = 1.2 k\Omega$

$V_{BE} = 0.7V$
$V_T = 25mV$

Q)

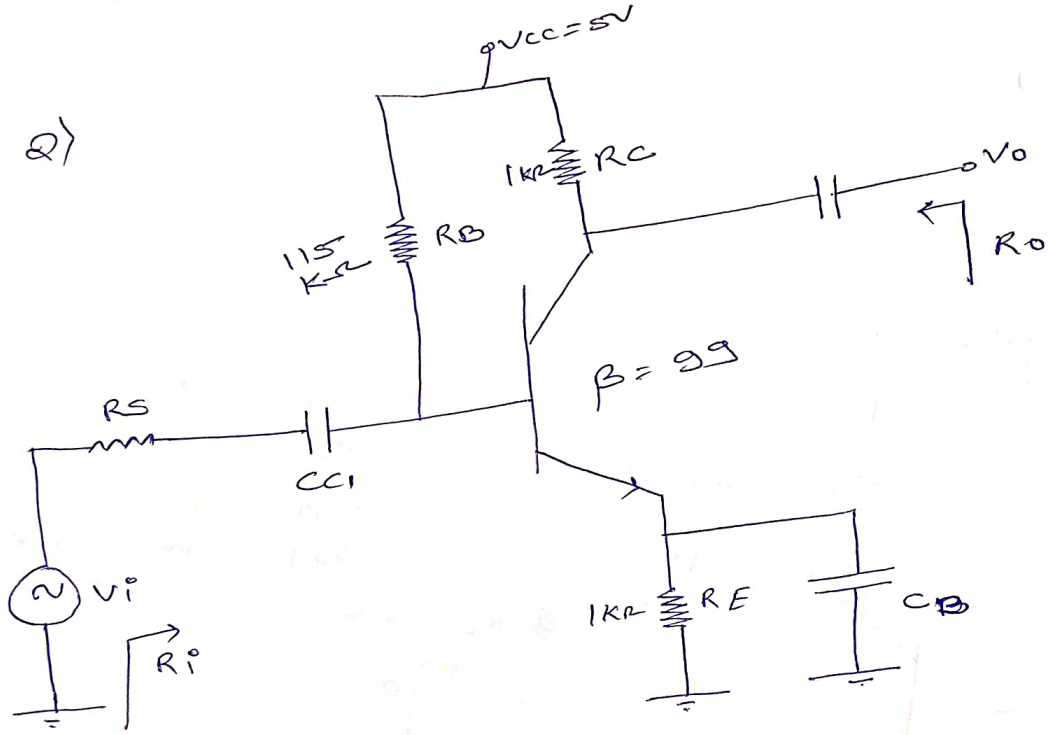

a) $R_S = 0\Omega$, $\frac{V_o}{V_i}$ ____ , $R_i = $ ____

b) $R_S = 200\Omega$, $\frac{V_i}{V_i} = $ ____ $R_i = $ ____

R_o ____

Sol^n a) DC equivalent

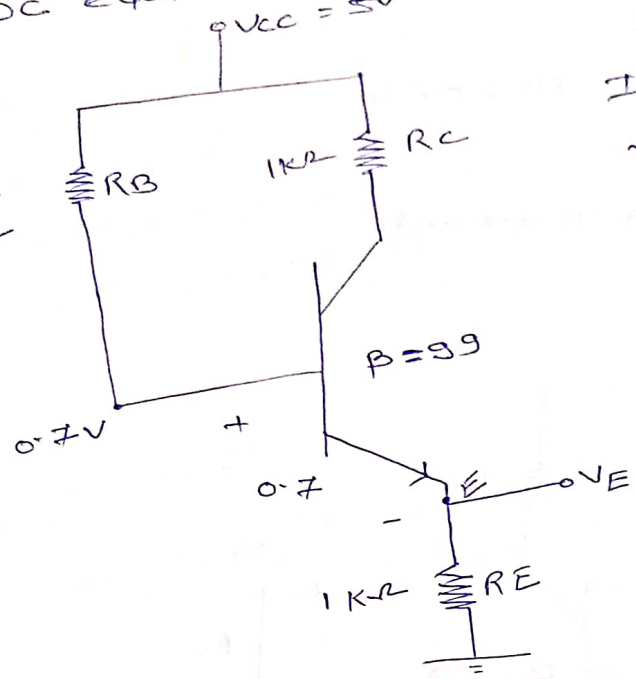

$\frac{5-0.7}{115}$

$I_B = 0.02\,mA$, $I_E = 2\,mA$,

$I_C = 1.98\,mA$

$r_\pi = \frac{V_T}{I_B} = \frac{0.025}{0.02} = 1.25\,k\Omega$

$g_m = \frac{I_C}{V_T} = \frac{1.98}{0.025}$

$= 79.2\,mA/V.$

~~$I_B = 0.03\,mA$~~

~~$I_B = \frac{I_C}{\beta}$~~

~~$0.03 \times 99 = I_C$~~

$\frac{I_E}{I_B} = \gamma$

$\gamma = (\beta+1)$

$(\beta+1) I_B = I_E$

$5 - 115 I_B - 0.7 - (I_E) = 0$

$5 - 115 I_B - 0.7 - (\beta+1) I_B = 0$

$5 - 215 I_B - 0.7 = 0$

$4.3 = 215 I_B$

$\boxed{I_B = 0.02\,mA}$

$I_B \beta = I_C$

$I_C = 0.02 \times 99$

$\boxed{I_C = 1.98\,mA}$

$I_E = I_C + I_B$

$\boxed{I_E = 2\,mA}$

$$r_\pi = \frac{V_T}{I_B} = \frac{\cancel{25\,mV}}{\cancel{0.02\,mA}} = \frac{25\,mV}{0.02\,mA} = 1.25\,k\Omega$$

$$g_m = \frac{I_C}{V_T} = \frac{1.98}{0.025} = 79.2\,mA/V$$

AC Equivalent hybrid π model

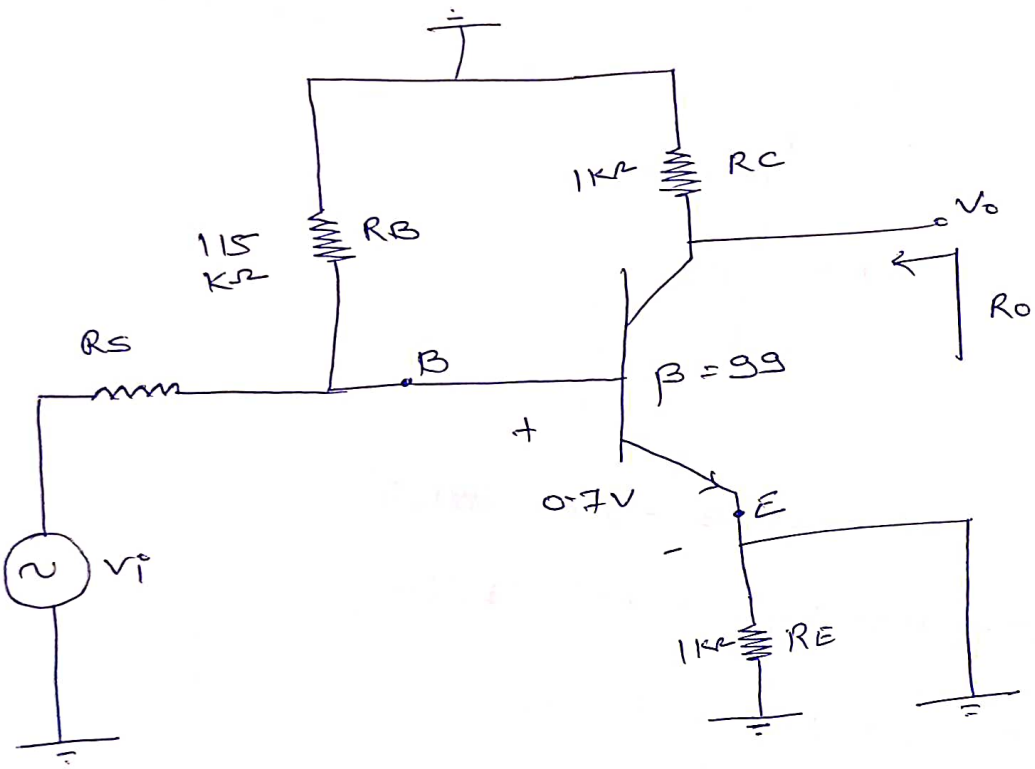

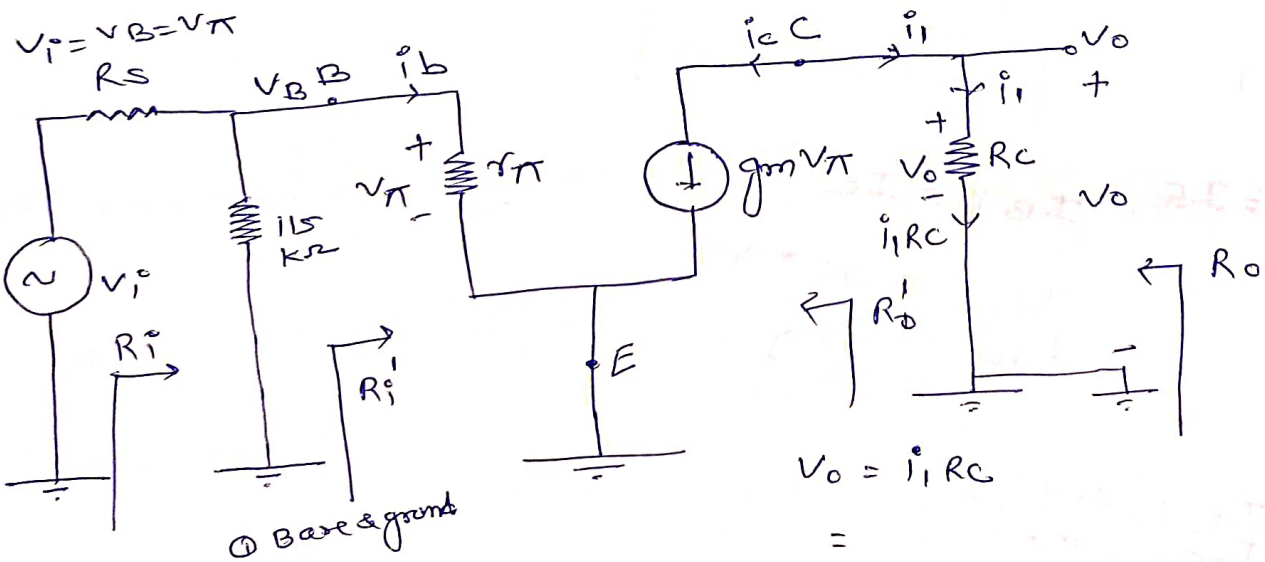

① Base & ground

$V_o = i_1 R_C$

=

$$R_i' = \frac{V_B}{i_b} = \frac{V_\pi}{i_b}$$

$$\boxed{R_i' = \frac{i_b r_\pi}{i_b} = r_\pi}$$

Note :- If Emitter side has no resistance then R_i' (Base & ground) is alway r_π

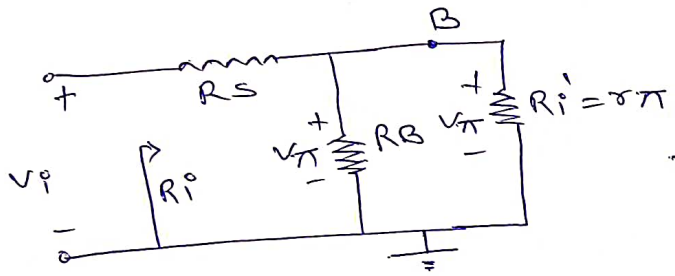

$\Rightarrow$

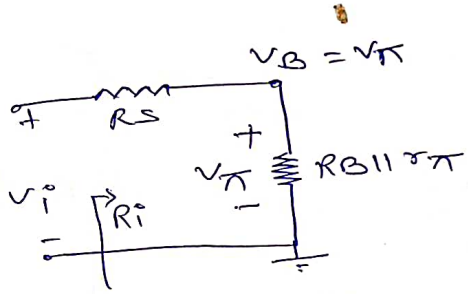

$$R_i = R_s + R_B \| r_\pi$$

$$\boxed{V_\pi = \frac{R_s \| r_\pi \cdot V_i}{(R_s + R_B \| r_\pi)}}$$

$R_s = 0$

$$\boxed{R_i = R_B \| r_\pi}$$

$R_s = 200$

$$R_i = 200 + R_B \| r_\pi$$

$$V_o = i_1 R_c$$

$$= -i_1 R_c$$

$$V_o = -g_m V_\pi R_c$$

$$\boxed{\frac{V_o}{V_\pi} = -g_m R_c}$$

$$\frac{V_o}{V_i} = \frac{V_o}{V_\pi} \cdot \frac{V_\pi}{V_i}$$

$$= -g_m R_C \cdot \frac{R_B \| r_\pi}{(R_B \| r_\pi) + R_S}$$

$R_o' =$ _____

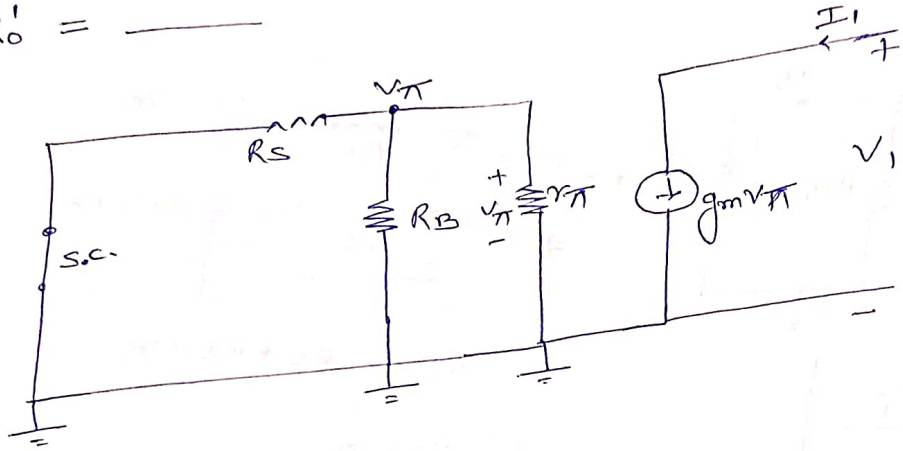

$$\frac{V_\pi}{R_B} + \frac{V_\pi}{R_S} + \frac{V_\pi}{r_\pi} = 0$$

$$V_\pi \left[\frac{1}{R_B} + \frac{1}{R_S} + \frac{1}{r_\pi} \right] = 0$$

$$\boxed{V_\pi = 0}$$

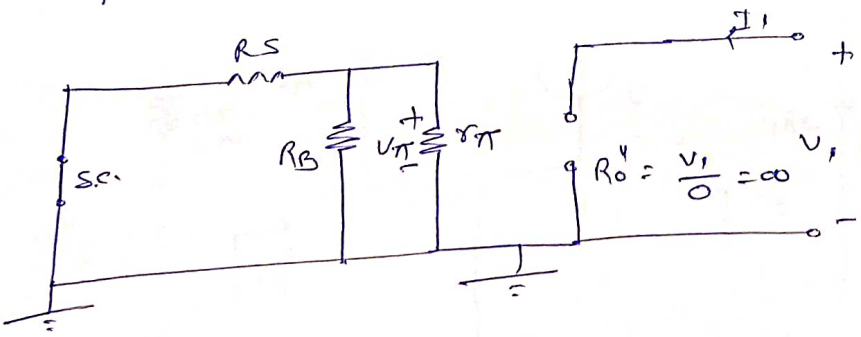

$$\boxed{\text{always} = R_o' = \frac{V_1}{0} = \infty}$$

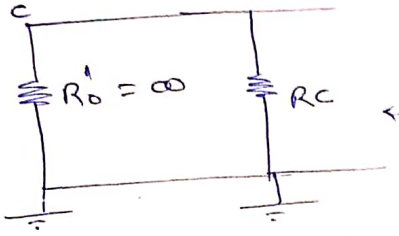

$R_o = R_o' \parallel R_C$

$\boxed{R_o = R_C}$

Q)

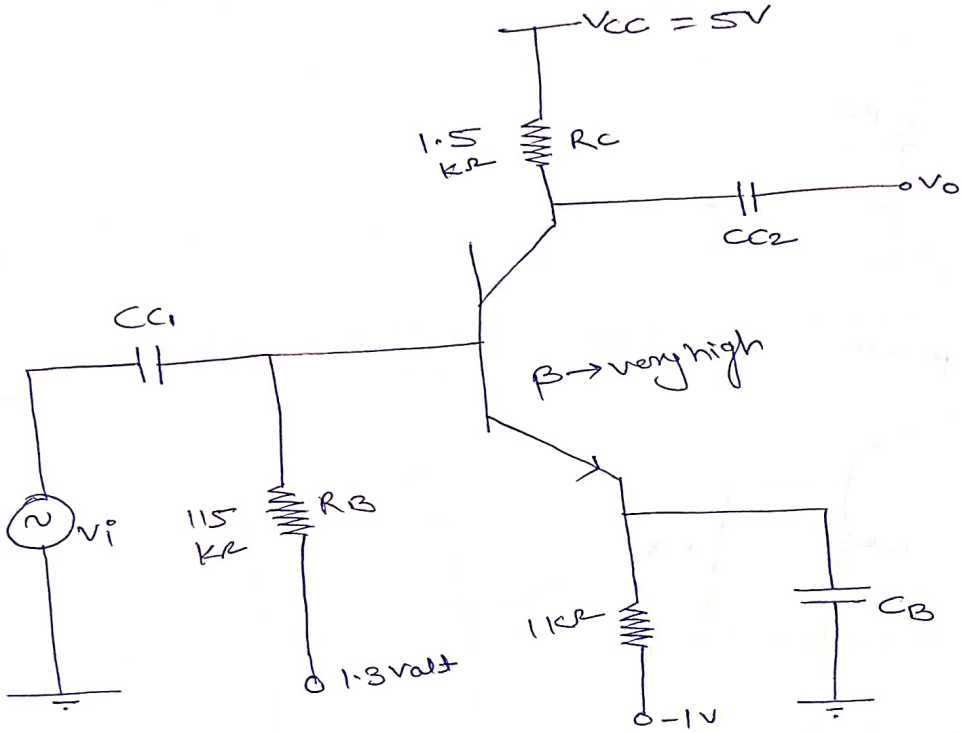

$V_{BE} = 0.7$

$\frac{V_o}{V_i} =$ _____

$R_i =$ _____

R_o _____.

Solⁿ:- DC Equivalent / analysis

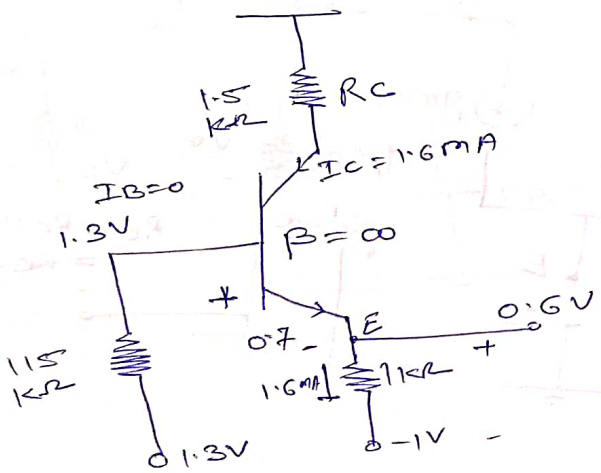

$I_C = 1.6mA$

$I_B \rightarrow 0$

$I_C = \beta I_B$

$$r_\pi = \frac{1}{I_B} = \frac{0.025}{I_B \to 0} = \infty$$

$$g_m = \frac{I_C}{V_T} = \frac{1.6}{0.025} = 64\,mA/V$$

AC Analysis

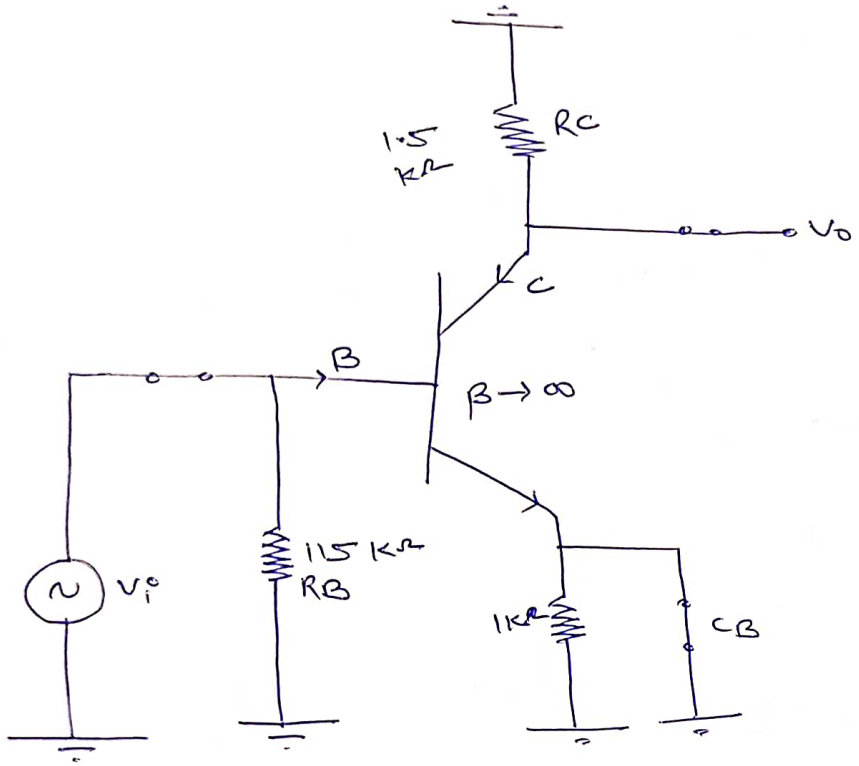

Hybrid π model

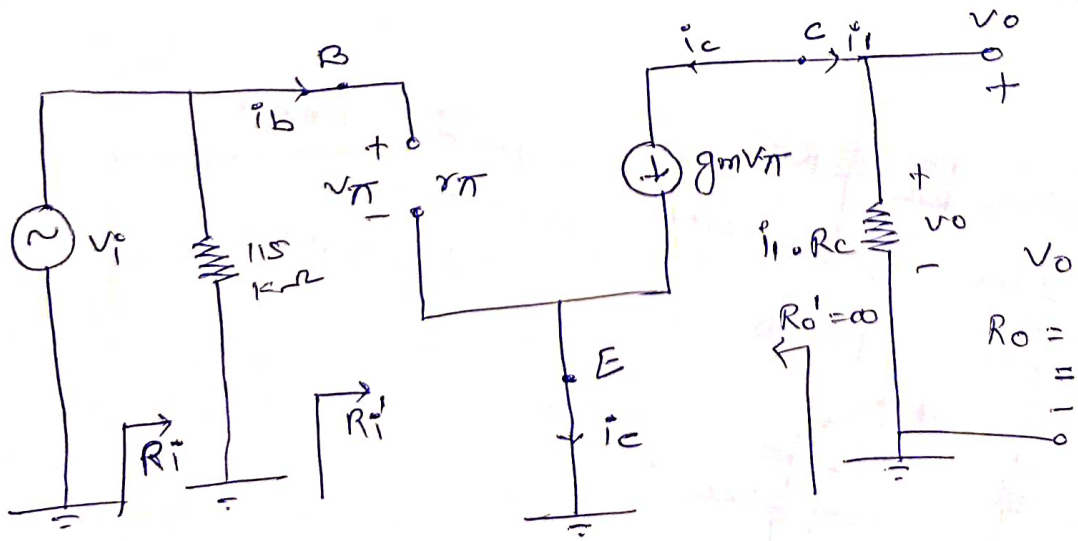

$\boxed{g_m r_\pi = \beta}$

$R_o = R_C \| R_o'$

$= R_C = 1.5\,K\Omega$

$R_i' = r_\pi = \infty$

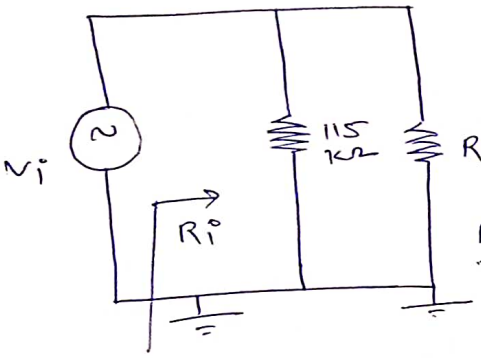

$R_i = 115 \parallel R_i'$

$\boxed{R_i = 115\,k\Omega}$

$V_o = i_1 R_C = -i_C \cdot R_C = -g_m V_\pi R_C$

$\frac{V_o}{V_\pi} = -g_m R_C \longrightarrow \frac{V_o}{V_i} = -g_m R_C = -64 \times 1.5$

$= -96$

Q)

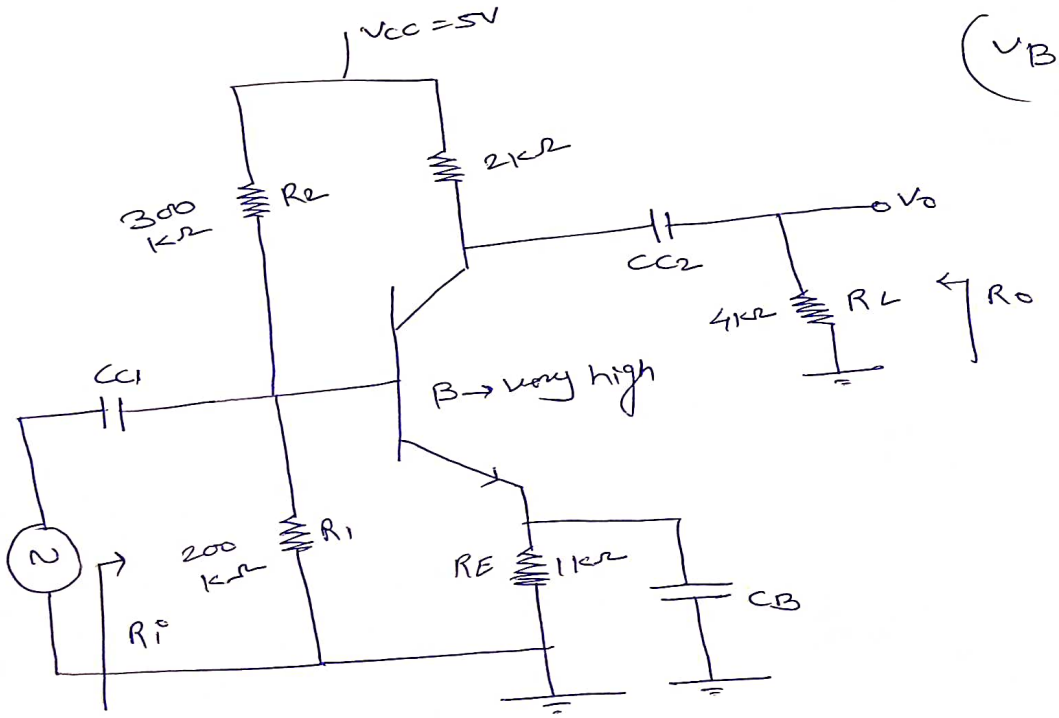

$(V_{BE} = 0.7V)$

Dc analysis

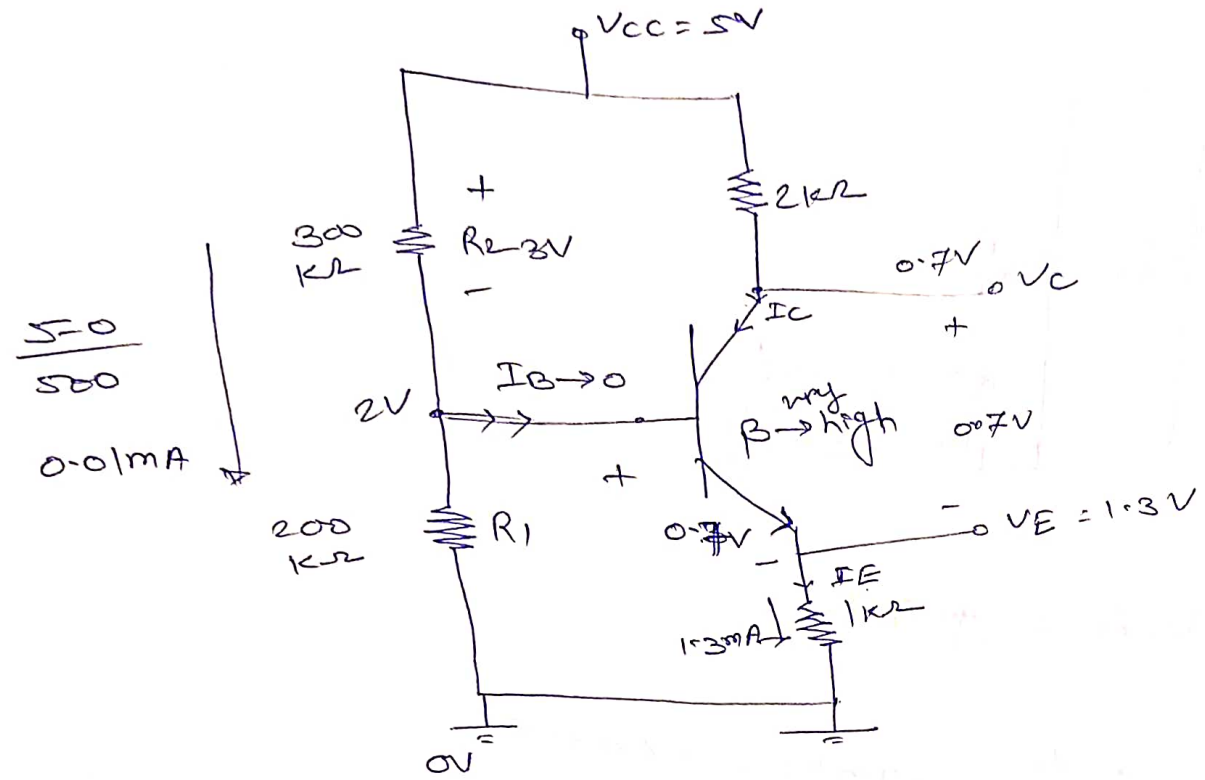

~~So~~

~~Ie 0.7 ~ IE ≈ 0~~

$I_E = 1.3mA = I_C$

~~IB~~ $I_B = 0$

$\beta = \infty$

$I_C = 1.3mA$, $B \to 0$

$$r_\pi = \frac{V_T}{I_B} = \frac{0.025}{I_B \to 0} = \infty$$

$$g_m = \frac{I_C}{V_T} = \frac{1.3}{0.025} = 52 mA/V.$$

AC analysis

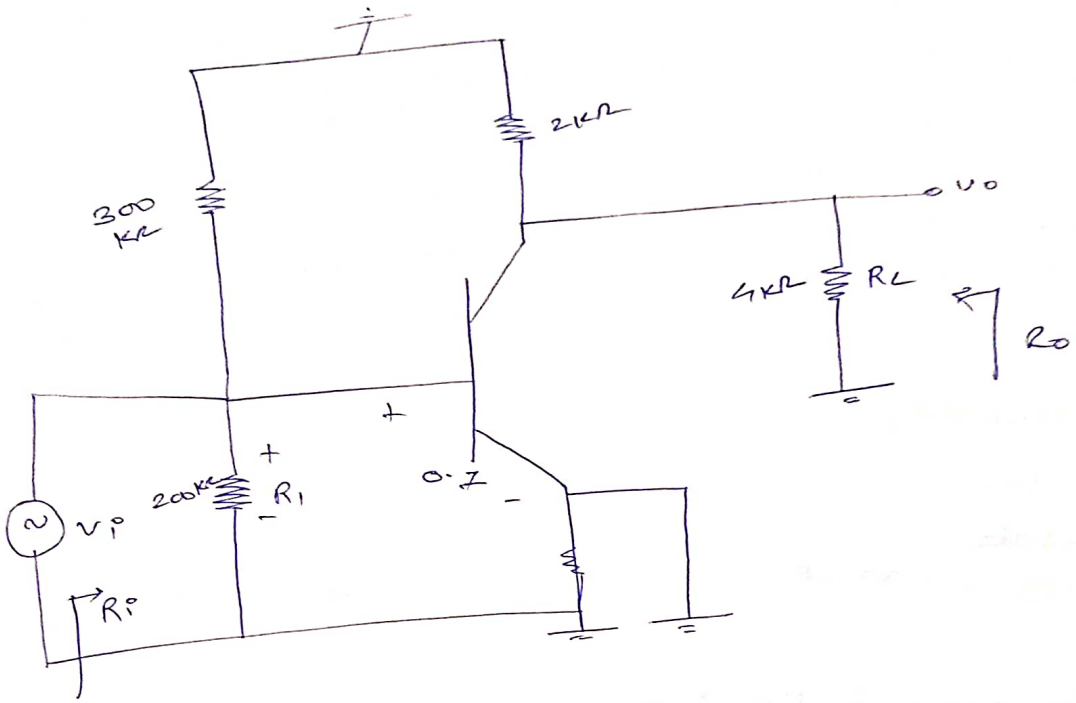

π model

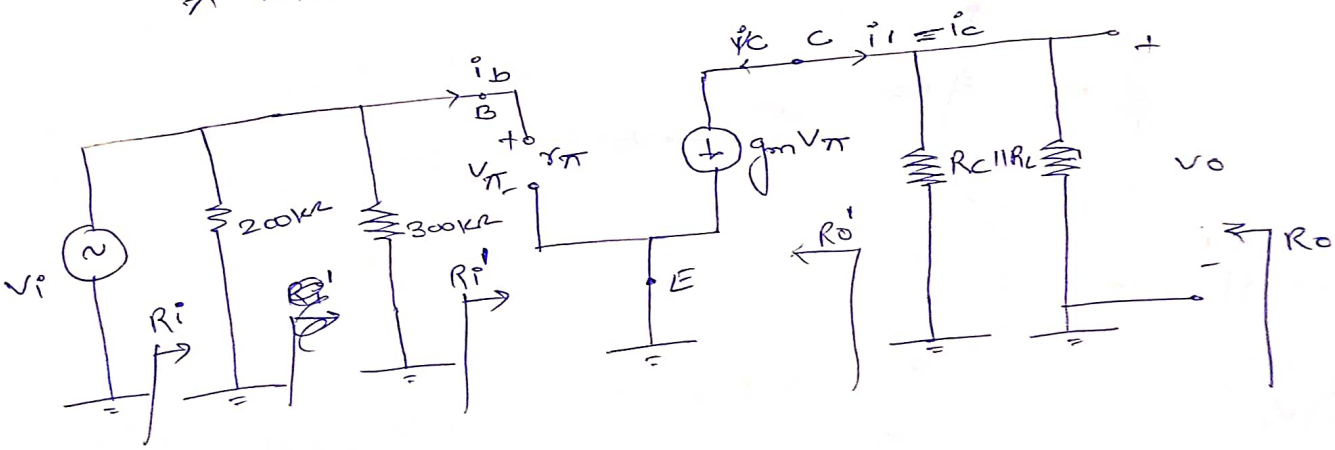

$R_i' = r_\pi = \infty$

$R_i = R_i' \,||\, 200 \,||\, 300$

$v_o = i_1 (R_C || R_L) = -i_c (R_C || R_L)$

$v_o = -g_m v_\pi (R_C || R_L)$

$$\frac{V_o}{V_\pi} = -g_m (R_C \| R_L)$$

$$= -52 \times 4/3$$

$$\boxed{\frac{V_o}{V_\pi} = -\frac{208}{3}}$$

$$\boxed{V_\pi = V_i}$$

$$\boxed{\frac{V_o}{V_i} = \frac{-208}{3}}$$

$$R_o = R_o' \| R_C \| R_L$$

$$= R_C \| R_L$$

$$= \cancel{R_C \| R_E}$$

$$= 4/3 = 1.33\,k\Omega$$

Imp unbypassed RE :→

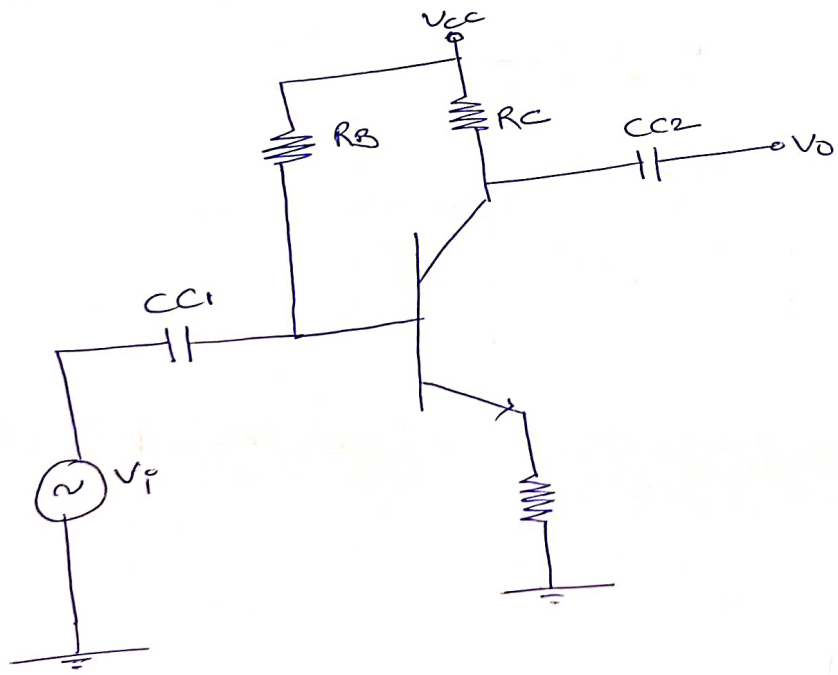

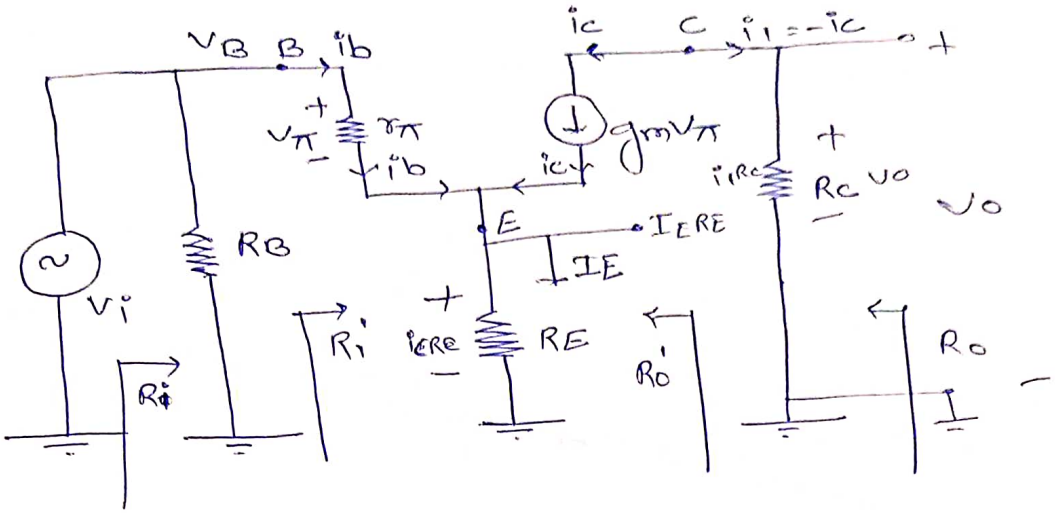

$$R_i' = \frac{V_B}{i_b}$$

$$I_E = i_b + i_c = (\beta+1) i_b$$

$$V_B - i_b r_\pi - i_E R_E = 0$$

$$V_B = i_b r_\pi + (\beta+1) i_b R_E$$

$$V_B = \left[r_\pi + (\beta+1) R_E \right] i_b$$

$$R_i' = \frac{V_B}{i_b} = r_\pi + (\beta+1) R_E$$

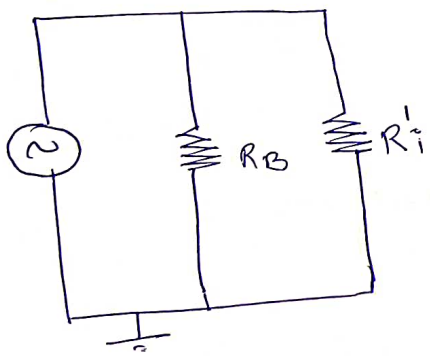

$$R_i = R_B \| R_i'$$

Conclusion :-

1) due to unbypass resistance R_E input resistance increases.

$$V_o = -i_c R_c = -i_c R_c = V_c$$

$$= -g_m V_\pi R_c = -\beta i_b R_c \quad -(i)$$

$$V_B = i_b [r_\pi + (\beta+1) R_E]$$

$$\boxed{\frac{V_o}{V_\pi} = \frac{V_c}{V_B} = A_v' \qquad A_v' = \frac{-\beta R_c}{r_\pi + (\beta+1) R_E}}$$

Net Resistance

bcs collector & ground yaad rakhna hai

$$R_E = 0$$

$$A_v' = \frac{V_c}{V_B} = \frac{-\beta R_c}{r_\pi}$$

$$\boxed{A_v' = -g_m R_c}$$

- Due to presence of unbypass resistance RE voltage gain decreases.

$$A_V = \frac{V_o}{V_i} = \frac{V_c}{V_B} \cdot \frac{V_B}{V_i}$$

$$=$$

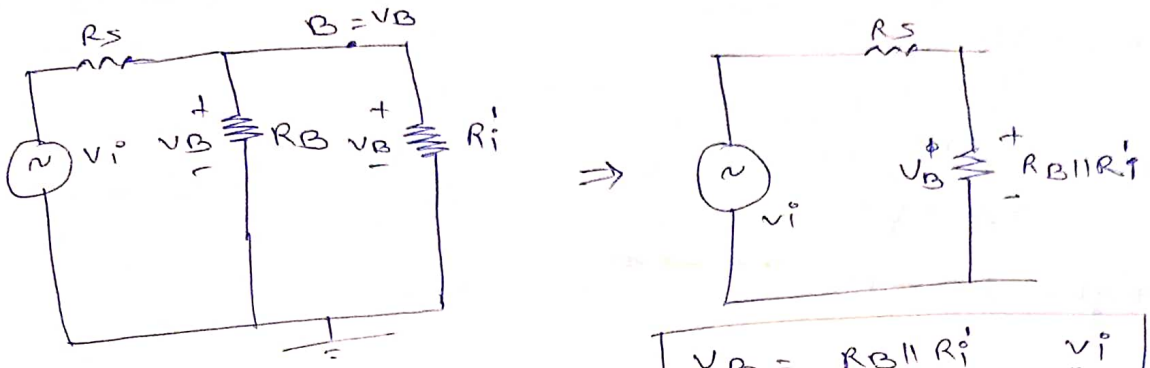

$$V_B = \frac{R_B \| R_i'}{R_B \| R_i' + R_S} v_i$$

if RE - high

$(\beta+1) R_E \gg r_\pi$

$$A_V' = \frac{-\beta R_C}{(\beta+1) R_E}$$

if

$\beta \gg 1$

$$A_V' \simeq \frac{-\beta R_C}{\beta \cdot R_E} \cong \frac{-R_C}{R_E}$$ independent of BJT parameters

due to proper negative FB through RE voltage gains becomes independent of the BJT parameter and thus independ of temperature variation. the meaning of this, it becomes voltage gain stabilizes due to this negative FB RE.

$\rightarrow \beta \rightarrow$ very high

$$\frac{V_C}{V_B} = A_V' \simeq \frac{-\beta R_C}{r_\pi + \beta R_E}$$

β – very high $\quad I_B \rightarrow 0, \; r_\pi \rightarrow \infty$

$$\frac{V_C}{V_B} = \frac{-R_C}{\frac{r_\pi}{\beta} + R_E} = \frac{-R_C}{\frac{1}{g_m} + R_E}$$

Q)

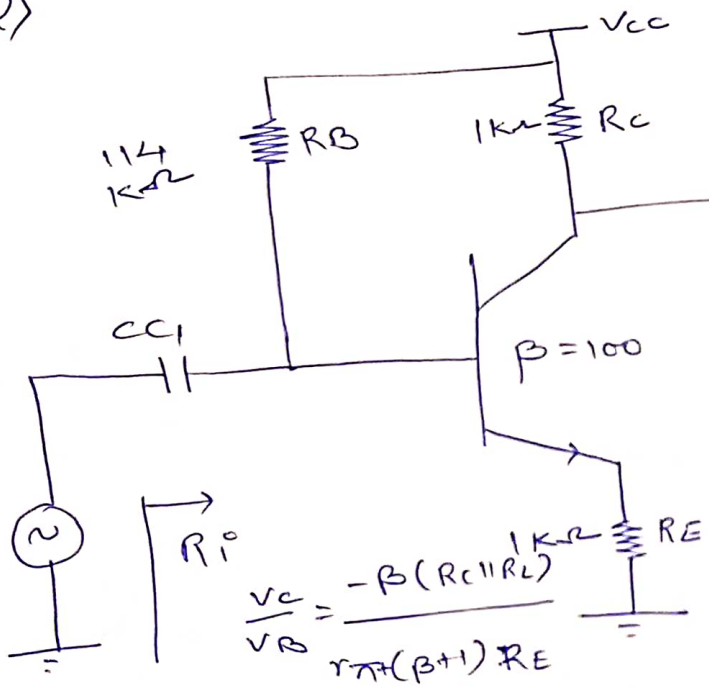

$V_{BE} = 0.7V$

$\frac{V_o}{V_i} = ?$

$V_T = 25mV$

$$\frac{V_C}{V_B} = \frac{-\beta(R_C \| R_L)}{r_\pi + (\beta+1) R_E}$$

=

Soln:-

$5 - I_B \times 114 - 0.7 - I_E R_E = 0$

$215 I_B = 4.3$

$I_B = 0.02 mA$

$I_C = 2mA$

$$r_\pi = \frac{V_T}{I_B} = \frac{0.025}{0.02} = 1.25\,k\Omega$$

$$g_m = \frac{I_C}{V_T} = \frac{2}{0.025} = 80\,mA/V$$

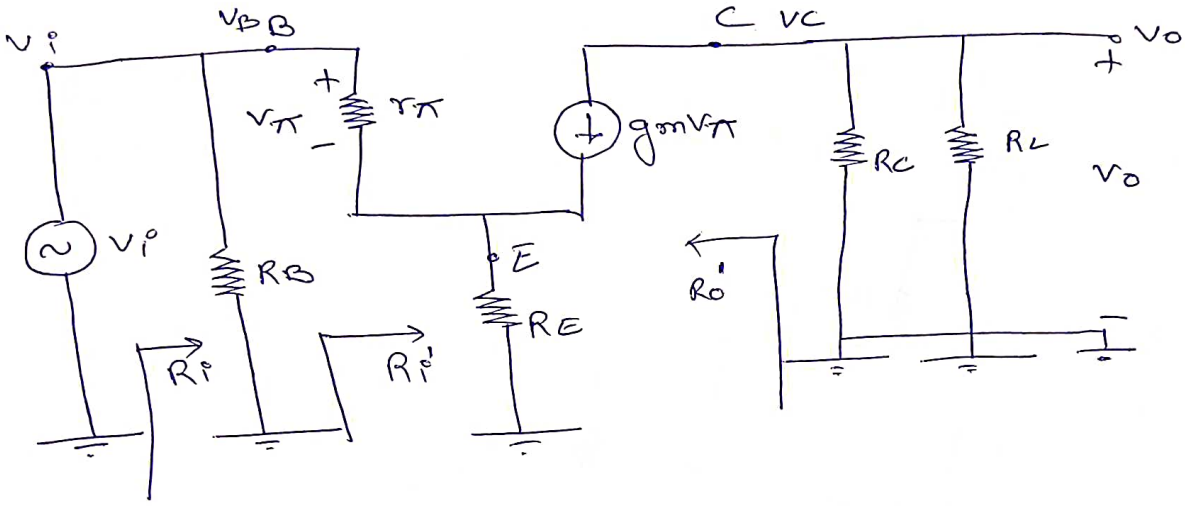

$$R_i' = r_\pi + (\beta+1) R_E$$

$$R_i = R_B \parallel R_i'$$

$$\frac{V_C}{V_B} = \frac{-\beta(R_C \parallel R_L)}{r_\pi + (\beta+1) R_E}$$

$$= \frac{-100\,(4/5)}{1.25 + 101 \times 1} = \frac{-80}{102.25} \simeq 0.78$$

$$\frac{V_o}{V_i} = \frac{V_C}{V_B} = -0.78$$

$$R_o = R_o' \parallel R_C \parallel R_L = R_C \parallel R_L$$
$$= 0.8\,k\Omega$$

$R_E = 0.2\,k\Omega$

$$\frac{V_C}{V_B} = \frac{-\beta \times (R_C \parallel R_L)}{r_\pi + (\beta+1) R_E}$$

$$= \frac{-100 \times 4.5}{1.25 + 101 \times 0.2} = \frac{-30}{1.25 + 20.2} = \frac{-30}{21.45}$$

$$= -3.72$$

Q)

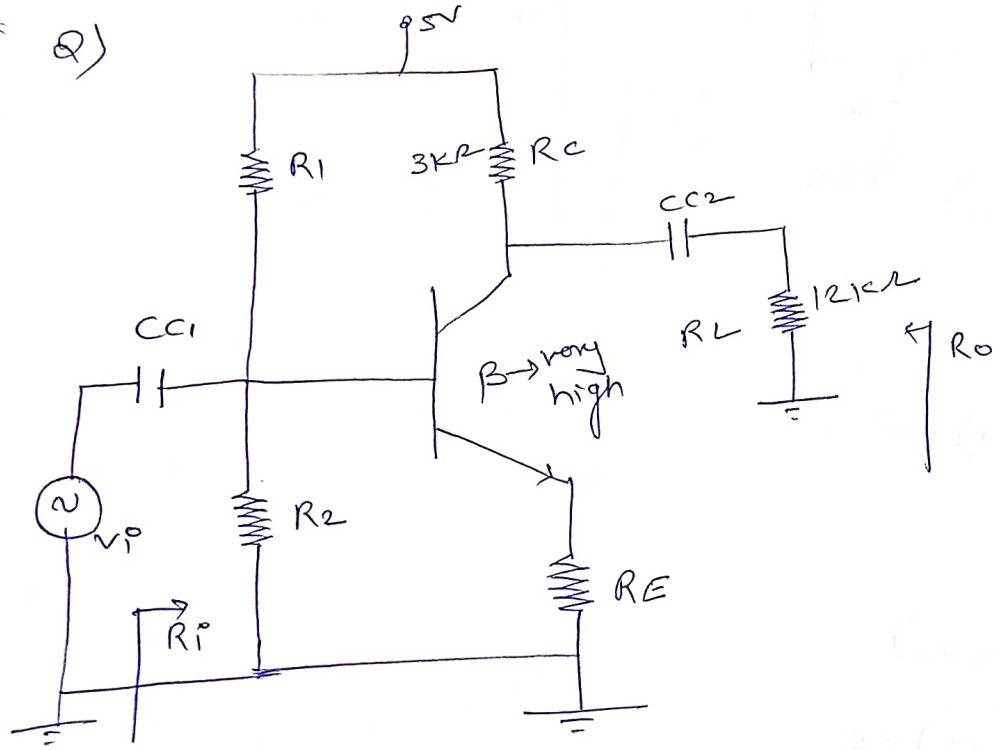

a) $R_1 = 330\,k\Omega$, $R_2 = 170\,k\Omega$

$R_E = 1\,k\Omega$

$\frac{V_o}{V_i} = ?$

b) $R_1 = 420\,k\Omega$, $R_2 = 80\,k\Omega$

$R_E = 100\,\Omega$

$\frac{V_o}{V_i} = _____ ?$

① dc

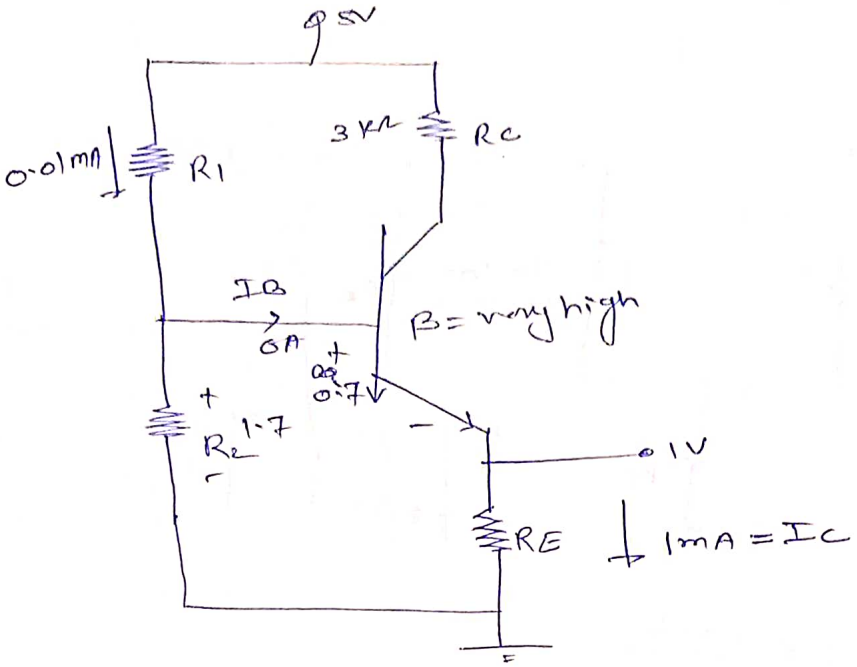

$$g_m = \frac{I_C}{V_T} = 40 mA/V$$

$r_\pi \to \infty$

② AC model

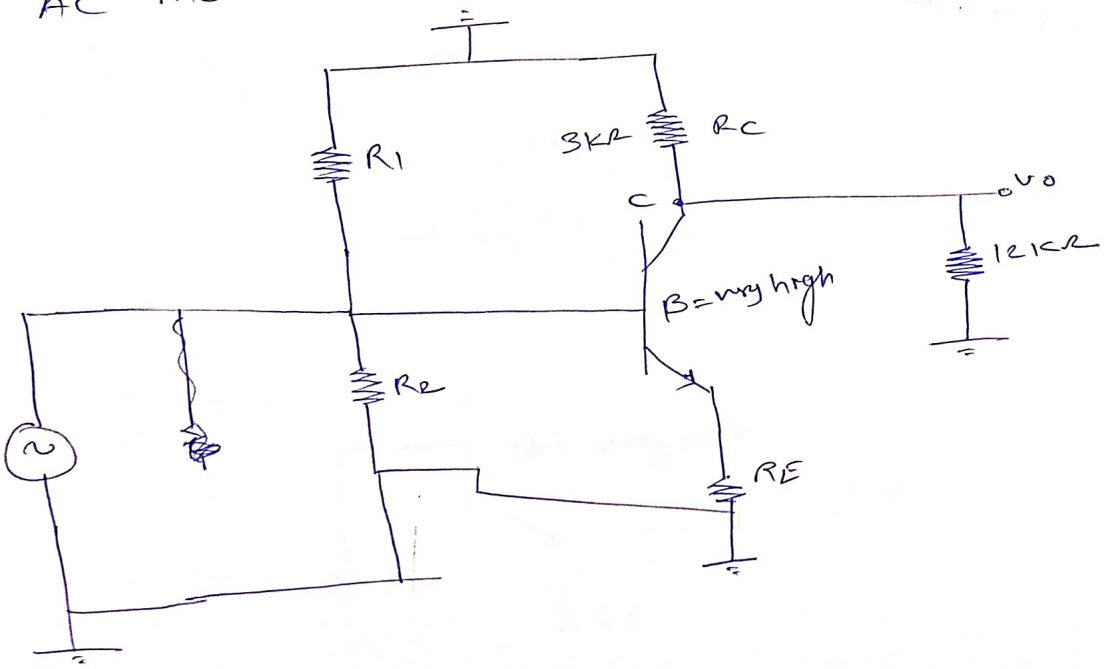

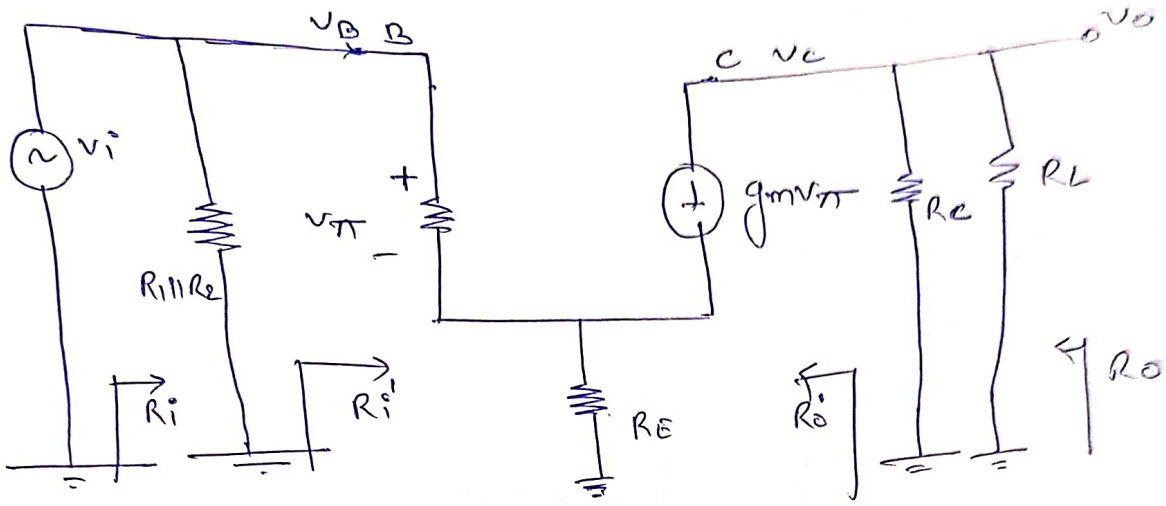

$$\frac{V_C}{V_B} = \frac{-R_C \| R_L}{\frac{1}{g_m} + R_E} = \frac{-2.4}{\frac{1}{40} + 1}$$

$$= -2.34$$

$$R_i = R_1 \| R_2 \| R_i'$$

$$R_o = R_C \| R_L = 2.4\ k\Omega$$

2)

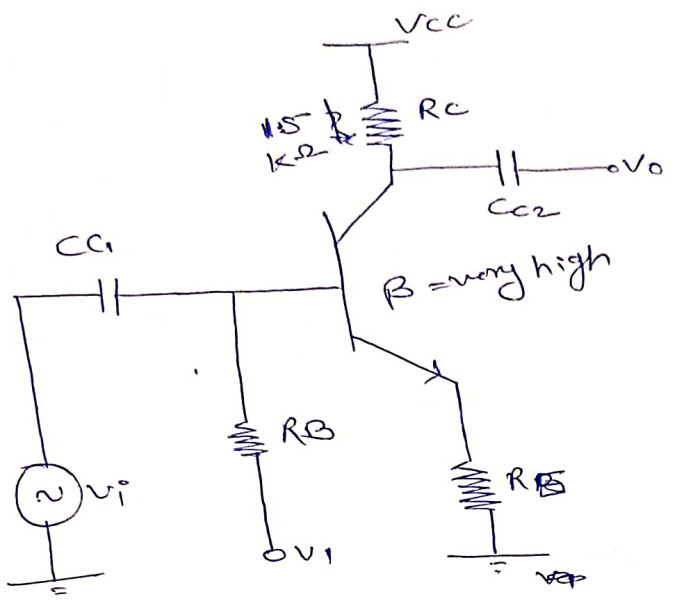

above BJT ckt has DC operating current $I_C = 1mA$, by selecting appropriate values of V_1, R_B, R_E & V_{cc} voltage gain $\frac{V_o}{V_i}$ is found to be -16, then the value of R_E ——— (Ω) upto two decimal places.

$\boxed{V_T = 25mV}$

Sol:-

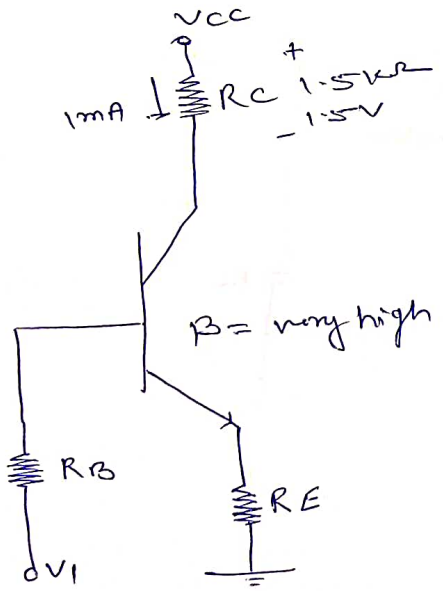

$r_\pi \rightarrow \infty$

$g_m \rightarrow \frac{I_C}{V_T} = \frac{1mA}{0.025} = 40mA/V$

AC analysis

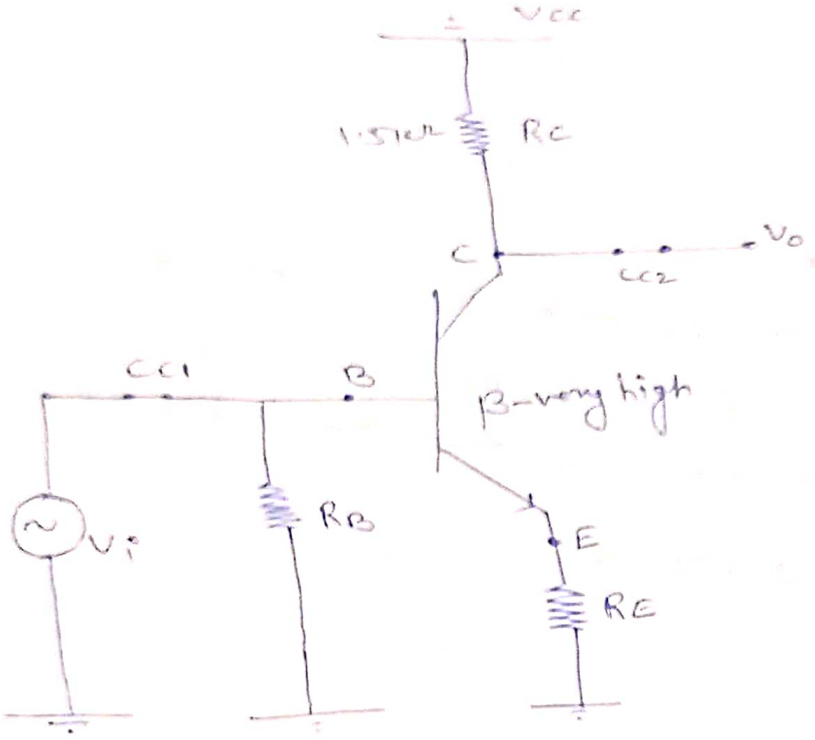

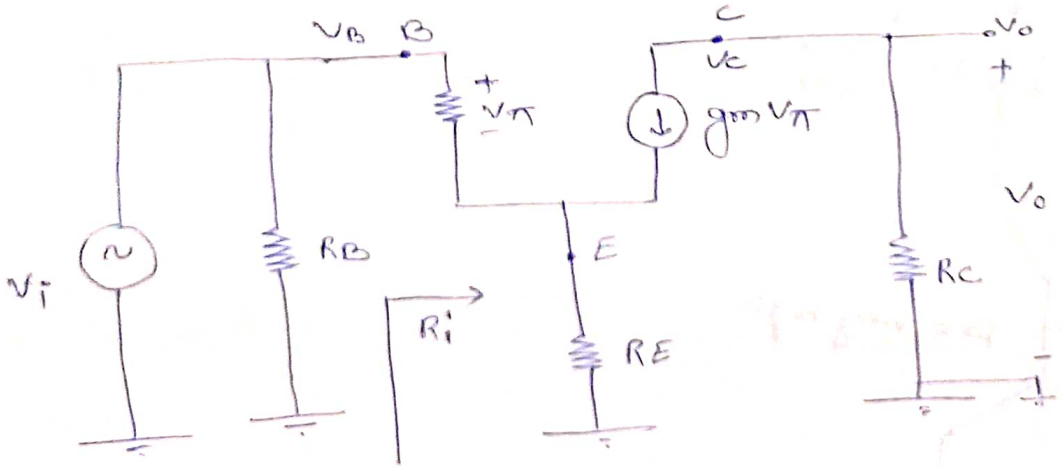

$$\frac{V_C}{V_B} = A_v' = -\left(\frac{R_C}{\frac{1}{g_m} + R_E}\right)$$

$$\frac{V_o}{V_i} = \frac{-R_C}{\frac{1}{g_m} + R_E}$$

$$-16 = \frac{-1.5\,k\Omega}{\frac{1}{g_m} + R_E}$$

$$16 = \frac{1500}{\frac{1}{g_m} + R_E}$$

$$\frac{1}{g_m} = \frac{1}{40}\,k\Omega$$

$$= 25\,k\Omega$$

$$\frac{1}{g_m} + R_E = 93.75$$

$$25 + R_E = 93.75$$

$$\boxed{R_E = 68.75}$$

miller's theorem

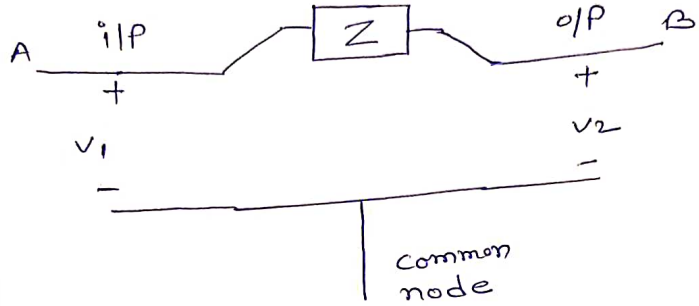

≡

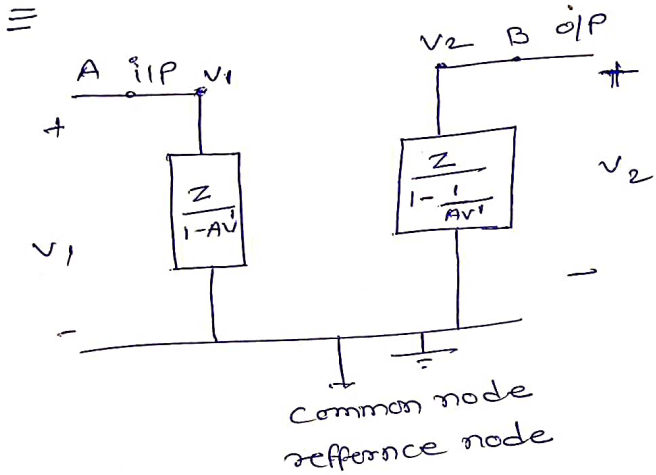

$$AV' = \frac{V_2}{V_1}$$

case a:-

$Z \rightarrow$ resistance $\rightarrow Z = R$

$$R'_{in} = \frac{R}{1 - AV'}$$

$$R'_{out} = \frac{R}{1 - \frac{1}{AV'}}$$

case b:-

$Z \longrightarrow$ inductor $\longrightarrow Z = j\omega L$

i/p $\rightarrow \dfrac{j\omega L}{1 - A_{v'}}$, o/p $\longrightarrow \dfrac{j\omega L}{1 - \frac{1}{A_{v'}}}$

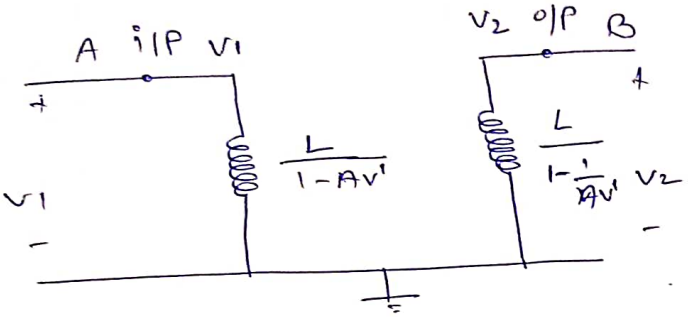

$$A_{v'} = \frac{V_2}{V_1}$$

case c)

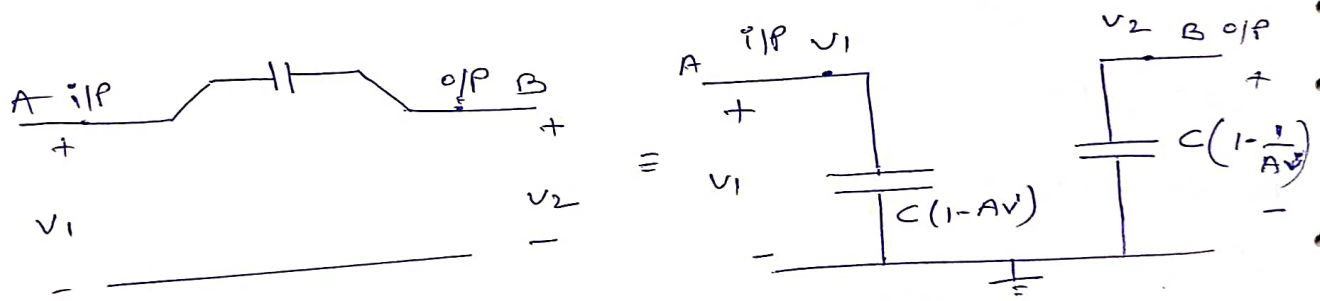

i/p

$$\frac{\frac{1}{j\omega C}}{1 - A_{v'}}$$

$$\frac{1}{j\omega C(1 - A_{v'})}$$

o/p

$$\frac{1/j\omega C}{1 - \frac{1}{A_{v'}}}$$

$$\frac{1}{j\omega C\left(1 - \frac{1}{A_{v'}}\right)}$$

Q)

$V_{BE} = 0.7V$

$\frac{V_o}{V_i} = ?$

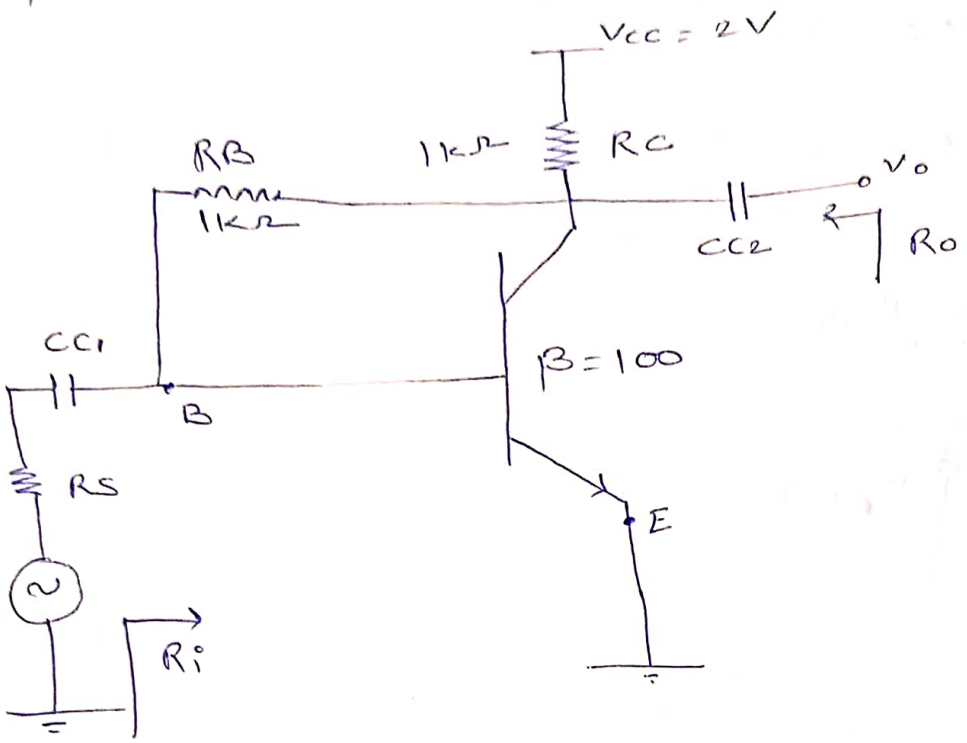

a) $R_s = 0$, $\frac{V_o}{V_i} = ?$

R_i, R_o

b) $R_s = 250\Omega$

soln:-

a) DC analysis

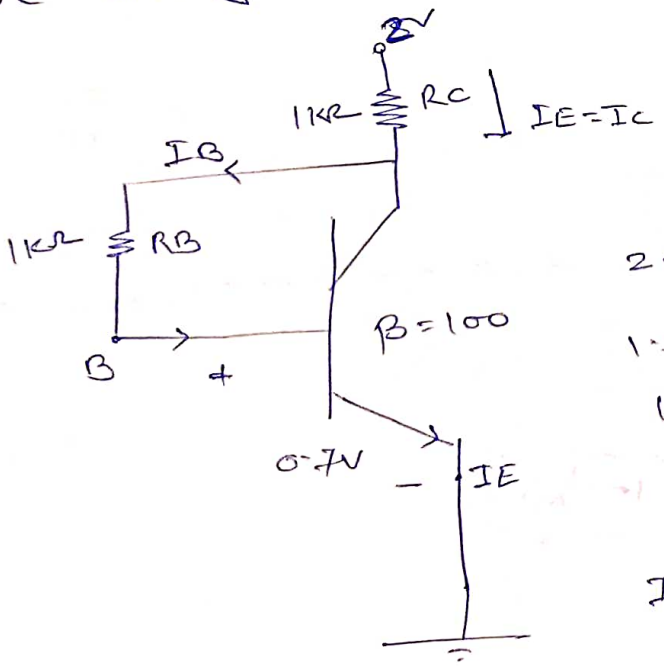

$2 - I_E R_C - I_B R_B - 0.7 = 0$

$1.3 = 101 I_B + 1 I_B$

$102 I_B = 1.3$

$I_B = \frac{1.3}{102}$

$I_C = \beta I_B = \frac{1.3}{102} \times 100$

$= 1.27 mA$.

$$r_\pi = \frac{V_T}{I_B} = \frac{\beta V_T}{I_C} = \frac{100 \times 0.025}{1.27}$$

$$= 1.968\ k\Omega \approx 1.97\ k\Omega$$

$$g_m = \frac{I_C}{V_T} = \frac{1.27}{0.025} = 50.8\ mA/V.$$

AC analysis

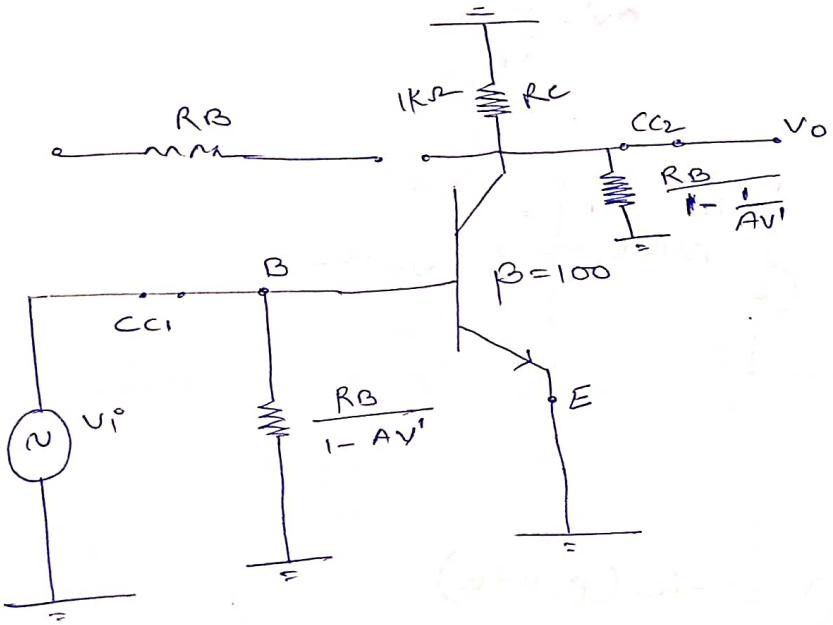

$$A_V' = \frac{V_C}{V_B}$$

$$\frac{R_B}{1 - \frac{1}{A_V'}} \cong R_B$$

$$\frac{1}{|A_V'|} << 1$$

$|A_V'|$ = moderate to high

$$\frac{1}{A_V'} = \frac{1}{-100}$$

$$= \frac{1}{-90}$$

$$= \frac{1}{-80}$$

π - model

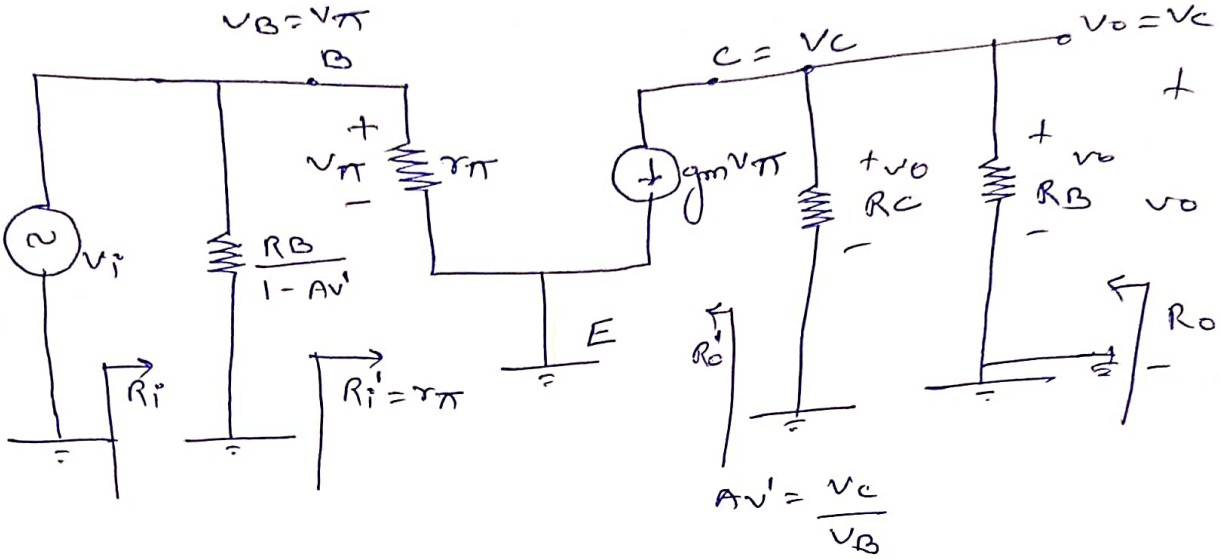

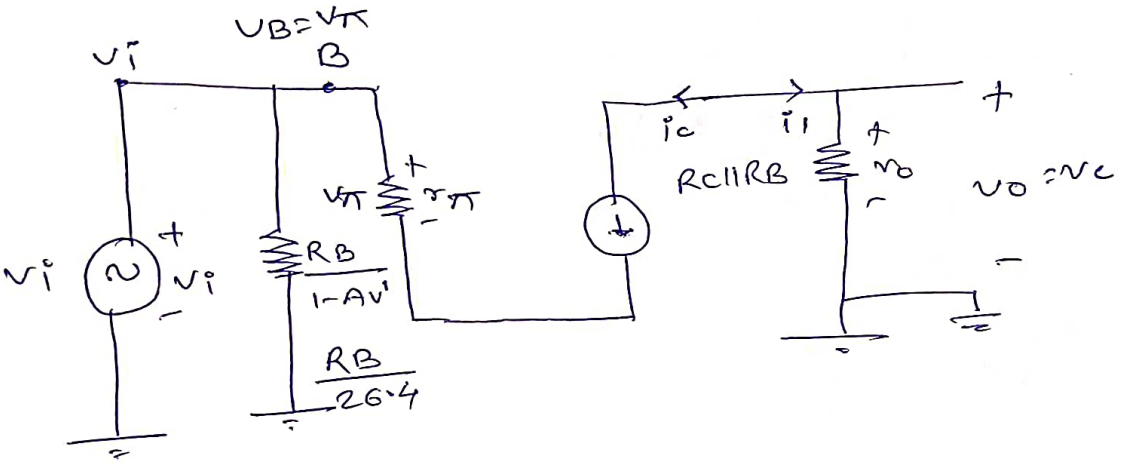

$V_B = V_\pi$

$V_o = V_c = i_1 (R_c \| R_B) = -i_c (R_c \| R_B)$

$I_c = g_m V_\pi$

$V_c = V_o = -g_m V_\pi (R_c \| R_B)$

$A_v' = \dfrac{-g_m (R_c \| R_B) \cancel{V_\pi}}{\cancel{V_\pi}} = -g_m (R_c \| R_B)$

$= -50.8 \times 0.5$

$= -25.4.$

$$\frac{V_o}{V_i} = A_v' = -25.4$$

$$\boxed{R_i = \frac{R_B}{26.4} \parallel R_i'}$$

$$R_o = R_o' \parallel R_C \parallel R_B$$
$$= R_C \parallel R_B$$
$$= 0.5\,k\Omega$$

b) $R_S = 280\,k\Omega$

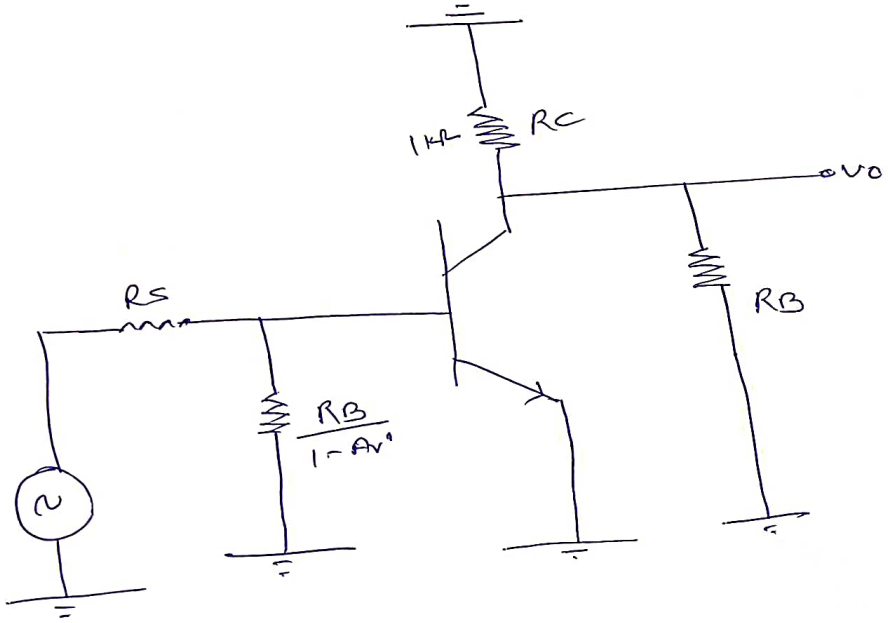

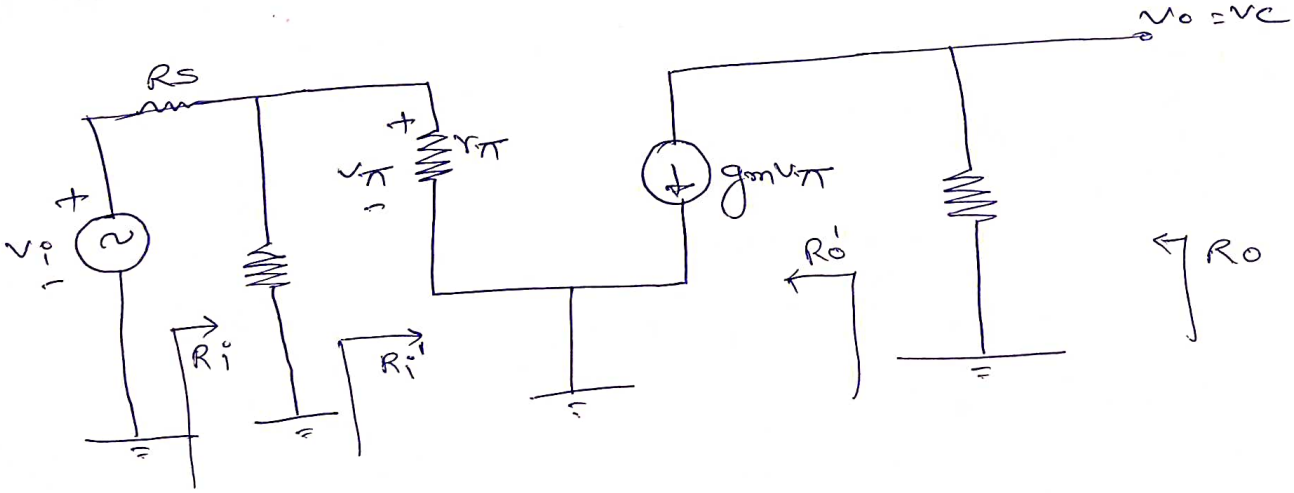

$$V_C = -g_m V_\pi \,(R_C \| R_B)$$

$$V_B = V_\pi$$

$$A_V' = -g_m (R_C \| R_B) = -25.4 = \frac{V_C}{V_B}$$

$$\frac{V_o}{V_i} = \frac{V_C}{V_i} = \frac{V_C}{V_B}\,\frac{V_B}{V_i}$$

$$= A_V' \,\frac{V_B}{V_i}$$

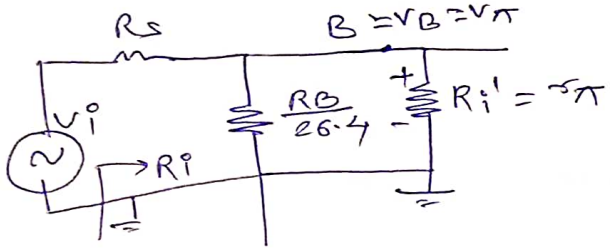

$$\frac{R_B}{26.4} \| r_\pi$$

$$R_i = R_S + \frac{R_B}{26.4} \| r_\pi$$

$$V_\pi = V_B = \frac{\frac{R_B \| r_\pi}{26.4}}{\frac{R_B}{26.4} \| r_\pi + R_S} \cdot V_i$$

$$\frac{V_o}{V_i} = A_V' \,\frac{V_B}{V_i} = -3.28$$

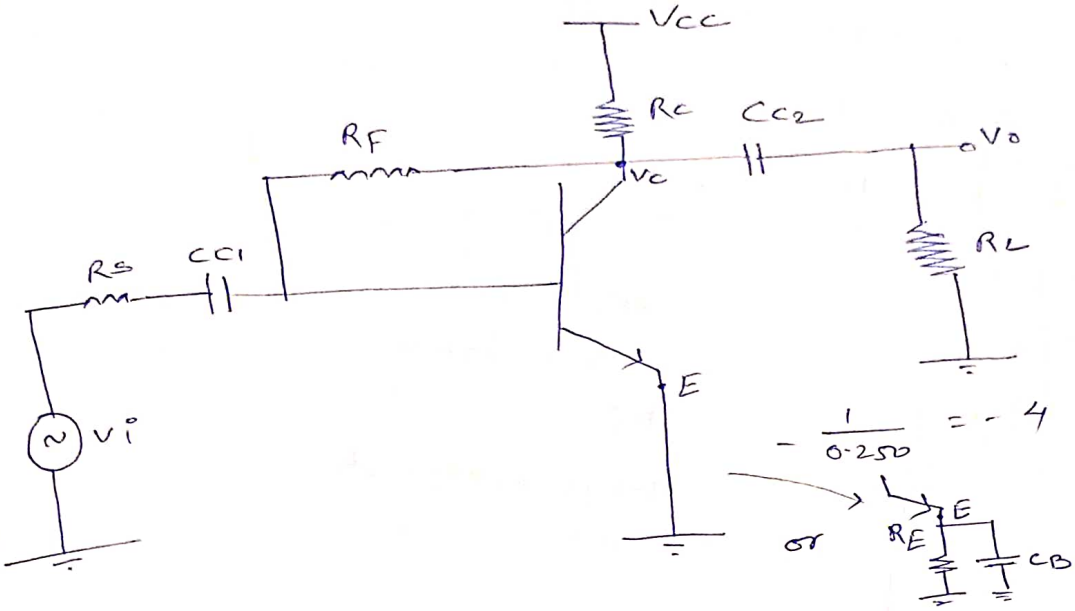

$$\frac{V_c}{V_i} = \frac{V_o}{V_i} \simeq \frac{-R_F}{R_S} \quad \text{if } R_S \neq 0$$

(a) ≈ 5 (b) −5.4

(c) ≃ −10 (d) −4 ✓

(a) −5 (b) −5.4

(c) −3.28 (d) −2.7

Exact analysis needed.

a) −5 b) −5.4

✓ c) −4 d) −3.7

Exact analysis ~~are~~ needed.

Homework

$V_{BE} = 0.7V$

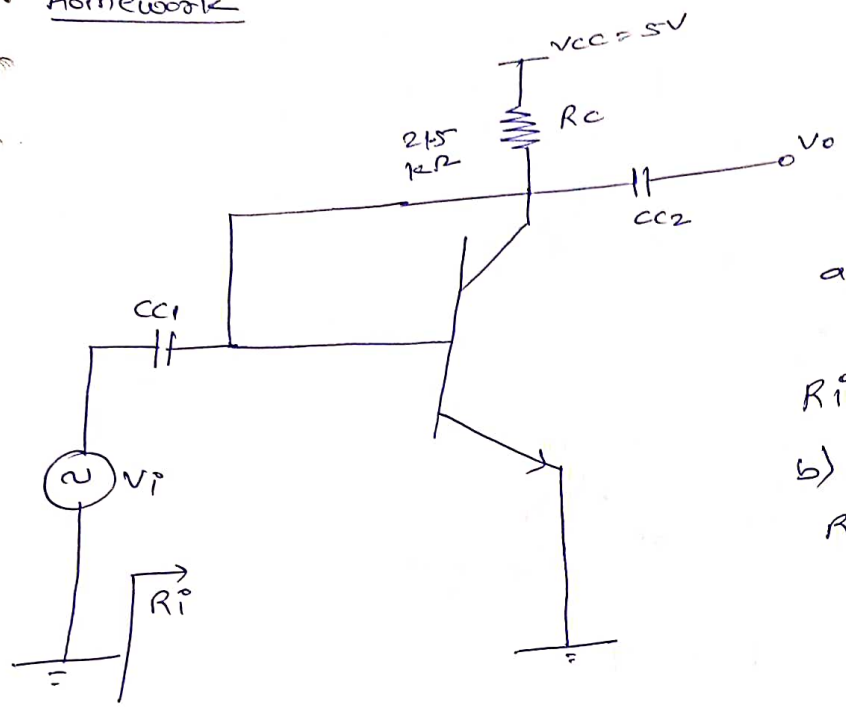

a) $\beta = 49$

$V_T = 25mV$

$R_i = _____ \Omega$

b) $\beta \rightarrow$ very high

$R_i ____ \Omega$

Revision

Diode & zener diode

→ important points → Revised 1st by

then those questions which are very good again solve & Noted

→ those question who have doubt you/confused you solve them again./PYQ

Q) multiple BJT

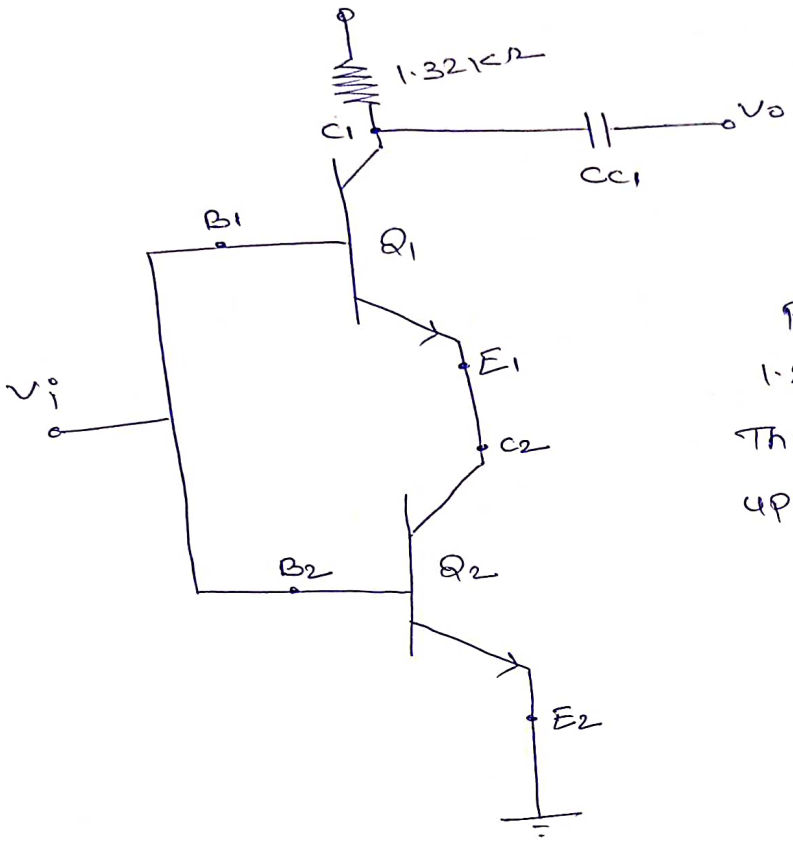

β of two transistors is very very high. operating point of both the transistors 1.2mA. $V_T = 25mV$

The value of gain $\frac{V_o}{V_i}$ ____ upto two decimal places.

Soln:-

$Q_1 \rightarrow r_{\pi 1} = \frac{V_T}{I_{B1}} \rightarrow \infty$

$g_{m1} = \frac{I_{C1}}{V_T} = \frac{1.2}{0.025} = 48mA/V$

$Q_2 \rightarrow r_{\pi 2} = \frac{V_T}{I_{B2}} \rightarrow \infty$

$g_{m2} = \frac{I_{C2}}{V_T} = \frac{1.2}{0.025} = 48mA/V$

π model

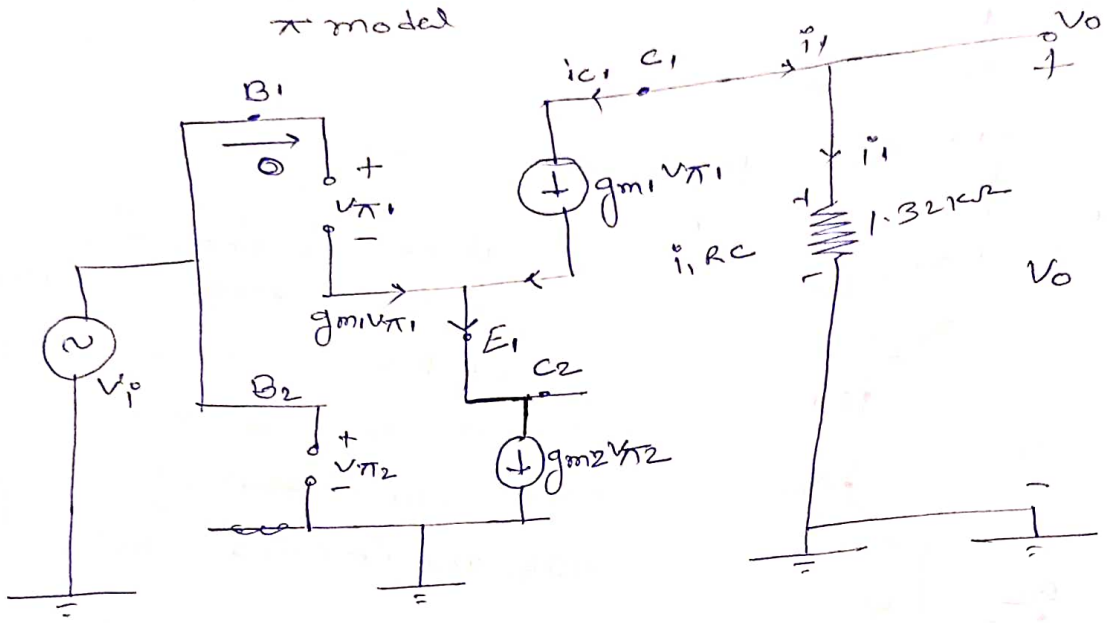

$$g_{m1}V_{\pi 1} = g_{m2}V_{\pi 2}$$

$$V_{\pi 1} = V_{\pi 2}$$

$$V_o = i_1 R_C$$

$$= -g_{m1}V_{\pi 1}R_C$$

$$\boxed{V_o = -g_{m1}V_{\pi 1}R_C}$$

$$V_i = V_{\pi 2} = V_{\pi 1}$$

$$\frac{V_o}{V_i} = -g_{m1}R_C$$

$$= \cancel{-4.8} -48 \times 1.32$$

$$\frac{V_o}{V_i} = -63.36$$

Q)

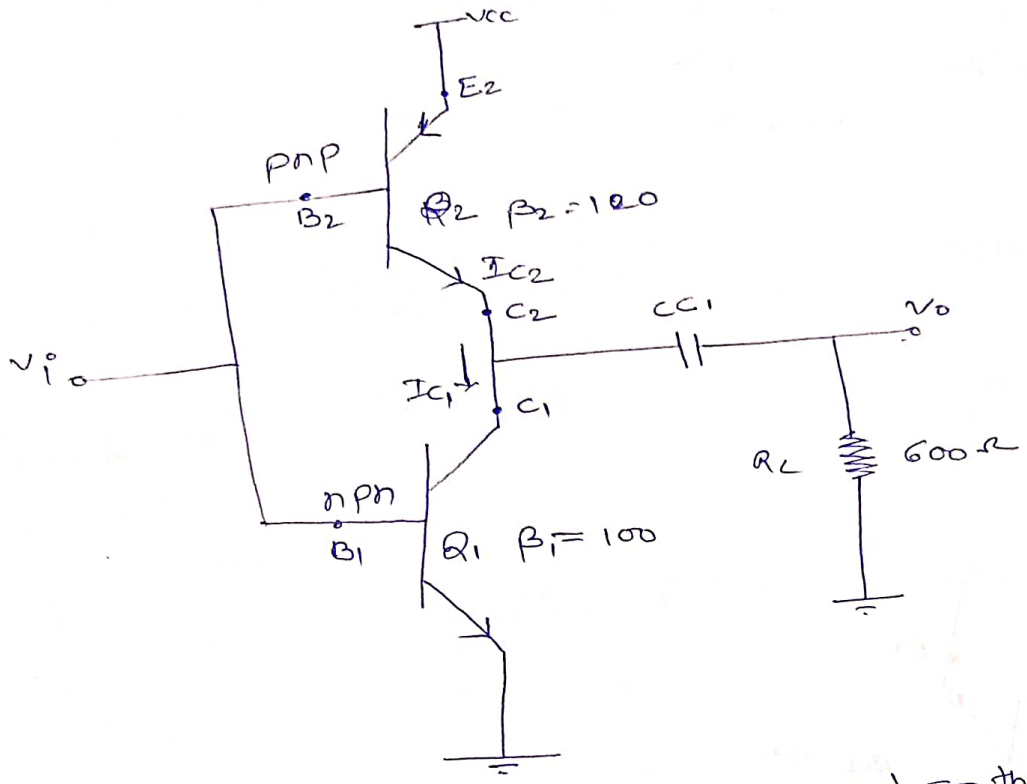

Both the transistors are properly biased so that they are operating in active region DC current I_E of Q_2 is 2.42 mA $V_T = 25mV$ Then the value of $\frac{V_o}{V_i}$ — upto two decimal places.

Ans:- $I_{E_2} = 2.42 mA$

$$I_{B2} = \frac{I_{E2}}{(\beta_2 + 1)} = \frac{2.42}{121} = 0.02 mA$$

$$I_{C2} = 2.4 mA$$

$$r_{\pi_2} = \frac{V_T}{I_{B2}} = \frac{0.025}{0.02} = 1.25 k\Omega$$

$$g_{m_2} = \frac{I_{C2}}{V_T} = \frac{2.4}{0.025} = 96 mA/V$$

$$I_{C1} = I_{C2} \rightarrow g_{m1} = \frac{I_{C1}}{V_T} = \frac{I_{C2}}{V_T} = g_{m2} = 96 mA/V$$

$$r_{\pi_1} = \frac{V_T}{I_{B1}} = \frac{V_T}{I_{C1}/\beta_1} = \frac{100 \times 0.025}{2.4}$$

$$= 1.041\ k\Omega$$

$g_{m1} = g_{m2} = 96\ mA/V$

$r_{\pi 1} = 1.041\ k\Omega$

$r_{\pi 2} = 1.25\ k\Omega$

AC model

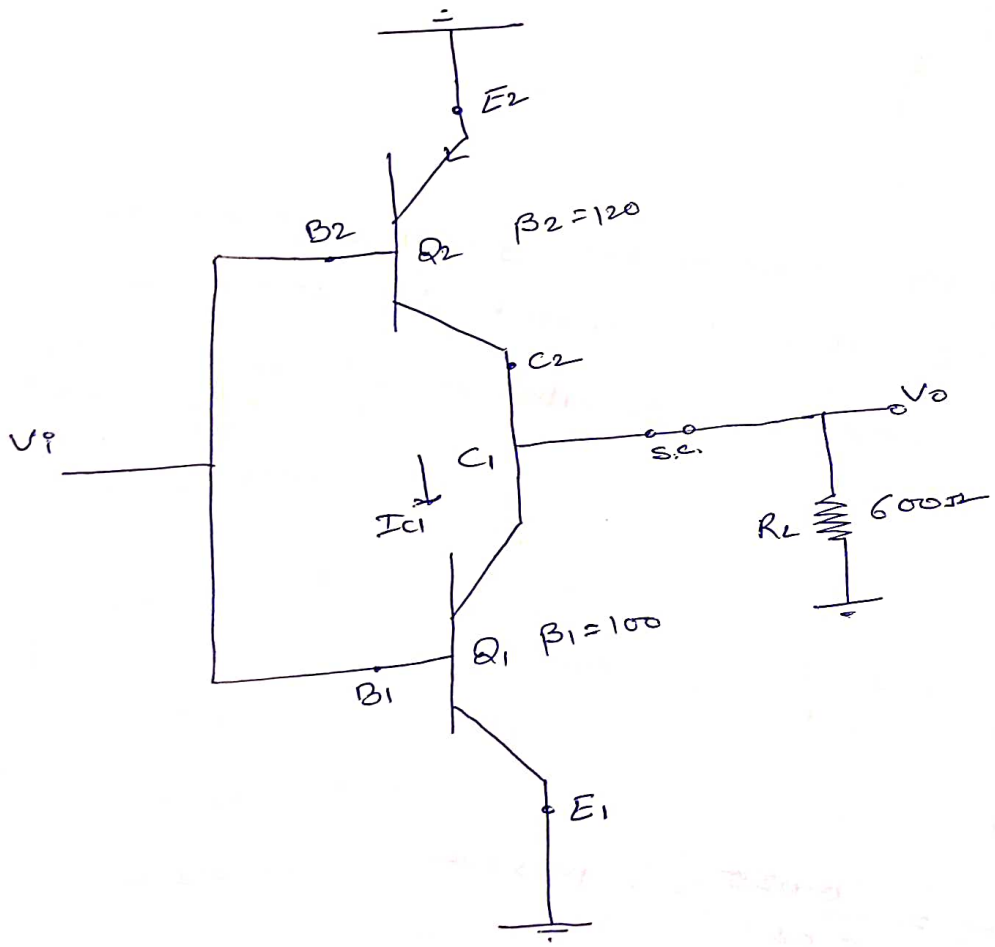

π model

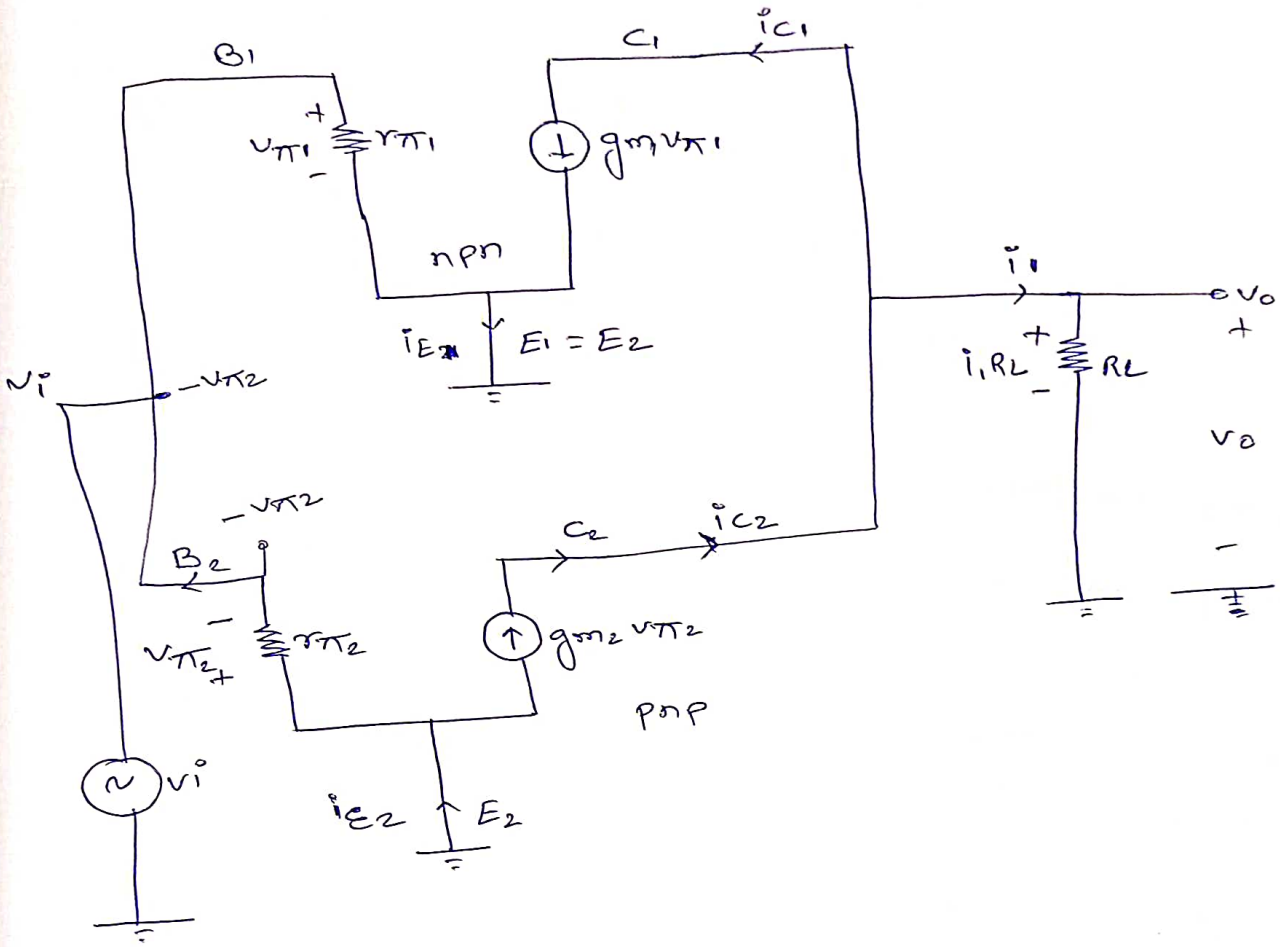

$V_o = i_1 R_L$

$i_{c2} = i_{c1} + i_1$

$i_1 = i_{c2} - i_{c1} = \beta_2 . i_{b2} - \beta_1 i_{b1}$

$i_{E1} = i_{E2}$

$i_{b1}(\beta_1+1) = (\beta_2+1)\, i_{b2}$

$i_1 = \beta_2 i_{b2} - \left(\frac{(\beta_2+1)}{(\beta_1+1)}\right) \beta_1 i_{b2}$

$i_1 = \left[120 - \frac{121}{100} \times 100\right] i_{b2} \Rightarrow \boxed{i_1 = 0.198\, i_{b2}}$

$$V_o = i_p R_L = 0.198\, i_{b2} R_L$$

$$v_{\pi 2} = i_{b2} r_{\pi 2}$$

$$v_i = v_{\pi 2} = -i_{b2} r_{\pi 2}$$

$$\frac{v_o}{v_i} = -\frac{0.198\, R_L}{r_{\pi 2}}$$

(d)

$$i_1 = g_{m2} v_{\pi 2} - g_{m1} v_{\pi 1}$$

$$v_i = -v_{\pi 2}, \quad v_{\pi 1} = v_i$$

$$v_i = v_{\pi 1} = -v_{\pi 2}$$

$$i_1 = g_{m2}(-v_i) - g_{m1} v_1$$

$$i_1 = v_1 \left[g_{m1} + g_{m2} \right]$$

$$v_o = -v_i \left[g_{m1} + g_{m2} \right] R_L$$

$$\boxed{\frac{v_o}{v_i} = -(g_{m1} + g_{m2}) R_L}$$

$$\frac{v_o}{v_i} = -115.2$$

Effect of coupling capacitor :→

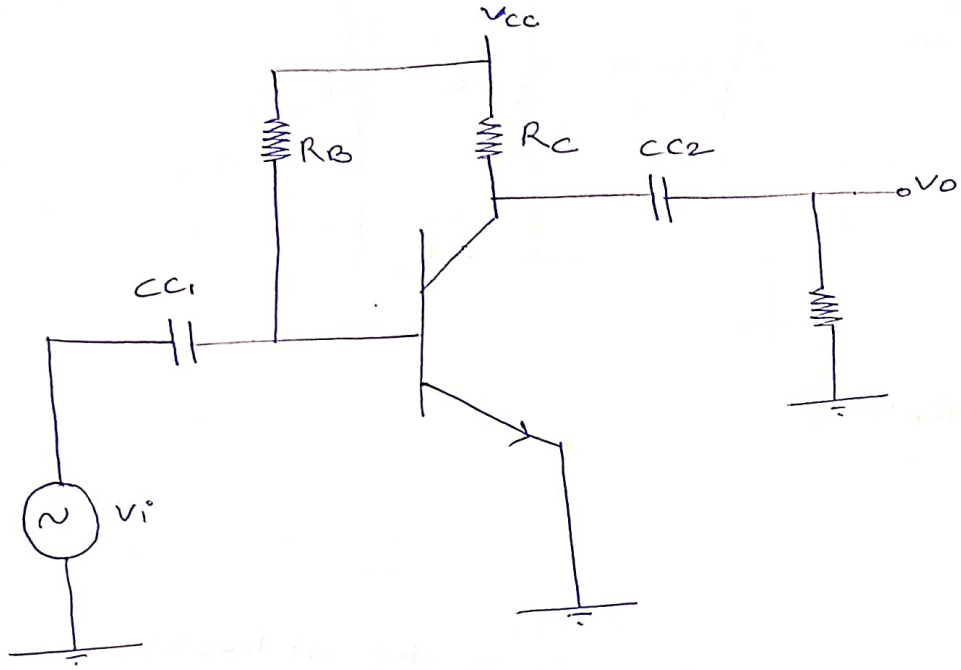

$CC_1 \rightarrow \frac{1}{j\omega CC_1}$

$CC_2 \rightarrow \frac{1}{j\omega CC_2}$

A.C. analysis.

$\omega \rightarrow$ has some value

if

$CC_1 \rightarrow \infty$ $\qquad \frac{1}{j\omega CC_1} \rightarrow 0$

$CC_2 \rightarrow \infty$ $\qquad \frac{1}{j\omega CC_2} \rightarrow 0$

if

$CC_1 \rightarrow$ finite $\qquad \frac{1}{j\omega CC_1}$

$CC_2 \rightarrow$ finite $\qquad \frac{1}{j\omega CC_2}$

$\omega \rightarrow$ low

$\frac{1}{j\omega CC_1} \rightarrow$ high value

G 2.0

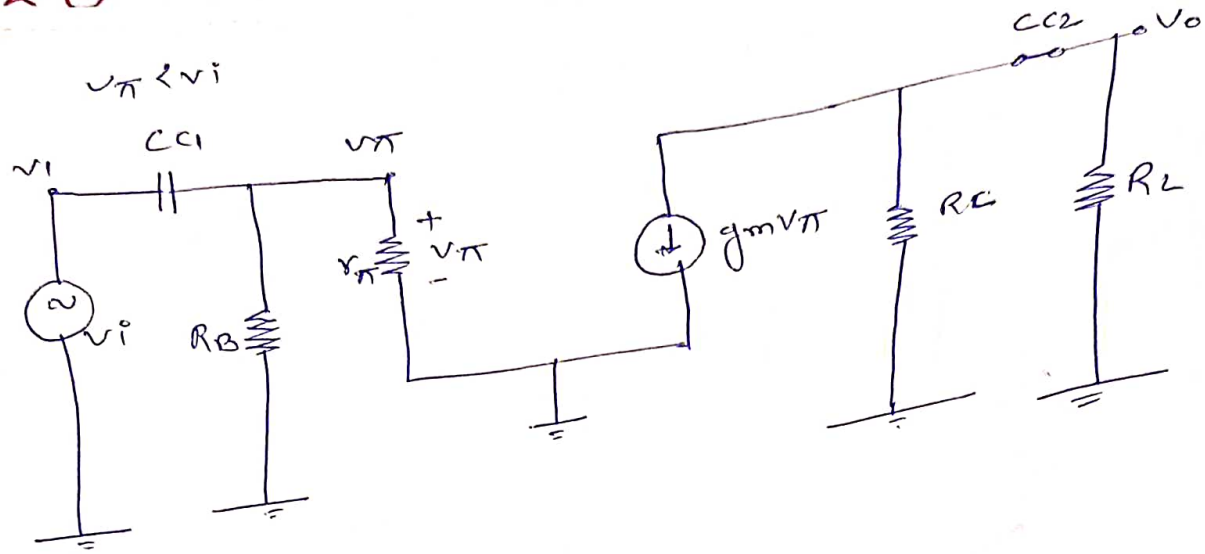

$$\frac{v_o}{v_i} = \frac{-g_m v_\pi (R_C \| R_L)}{v_i}$$

if $C_{C1} \to \infty$

$C_{C1} \to$ finite $\quad \frac{1}{j\omega C_{C1}} \to$ finite / high value at low ω

$\frac{1}{j\omega C_{C1}} \to$ low at high ω.

$\omega \to$ frequency.

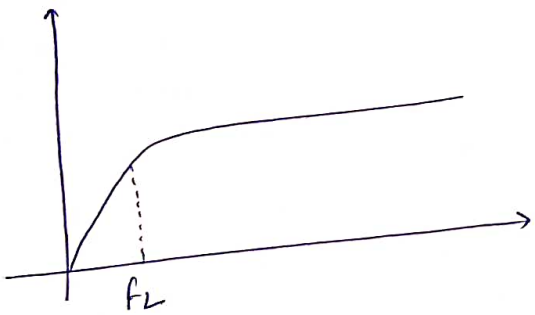

high pass filter

if CC_1 is S.C

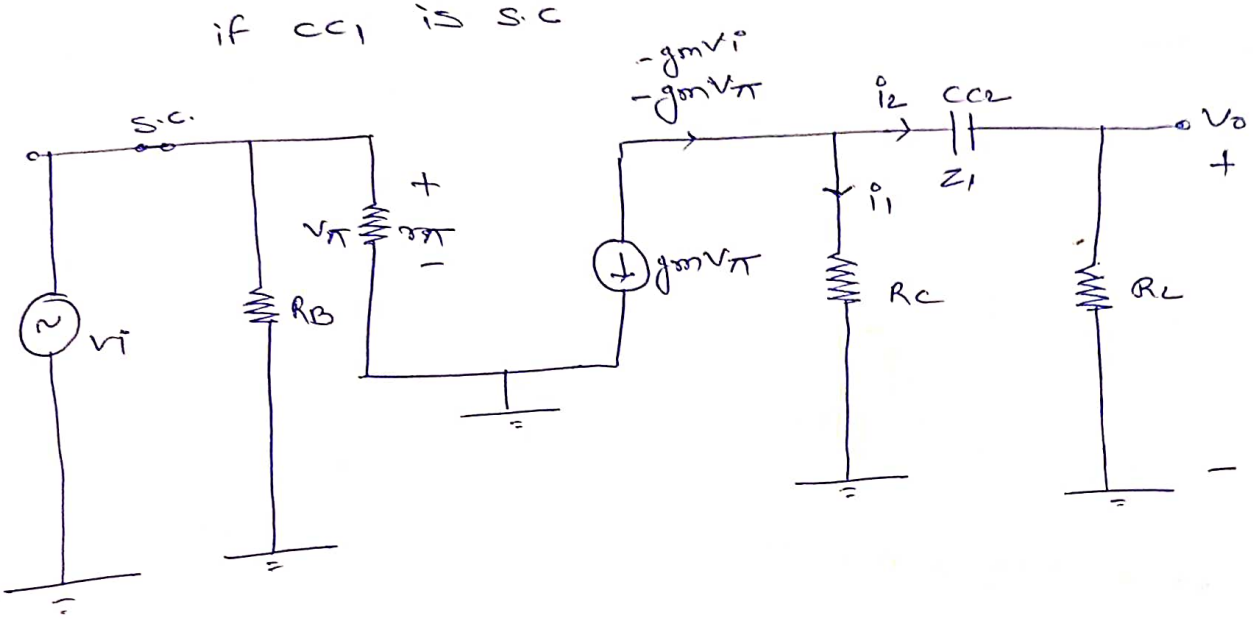

$$CC_2 \xrightarrow{\text{finite}} \frac{1}{j\omega CC_2}$$

$$\omega \to \text{low} \to \frac{1}{j\omega CC_2} \to \text{high}$$

Ideally the value of coupling capacitor CC_1 & CC_2 is very very high so that at any i/p frequency ω the impedance offered by them is very very small ($\to 0$) and thus in AC analysis they offer 0 Resistance and ideal behaviour.

but practically the values of capacitor CC_1 & CC_2 are finite & due to this at low frequency they offer high impedance value and thus decreases the gain of the system at low frequency, while at high frequencies they offer low impedance and does not decrease the gain of the system.

So from the above analysis we can say that due to coupling capacitors BJT amplifier ckt behaves as a high pass filter.

low pass filter

$$H(s) = \frac{K}{(s+a)}$$ ← only poles exist

$s = -a$.

$\boxed{\omega_H = a}$

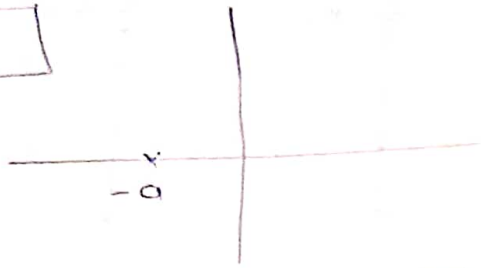

1st order low pass filter

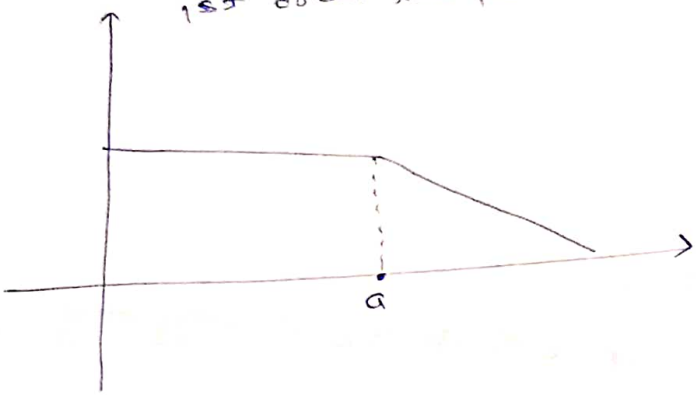

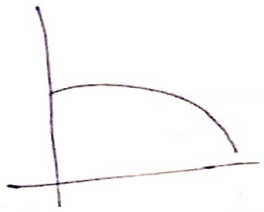

2nd order

$$H(s) = \frac{K}{(s+a)(s+b)}$$

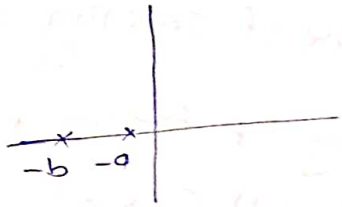

$\omega_{H_1} = a$

$\omega_{H_2} = b$

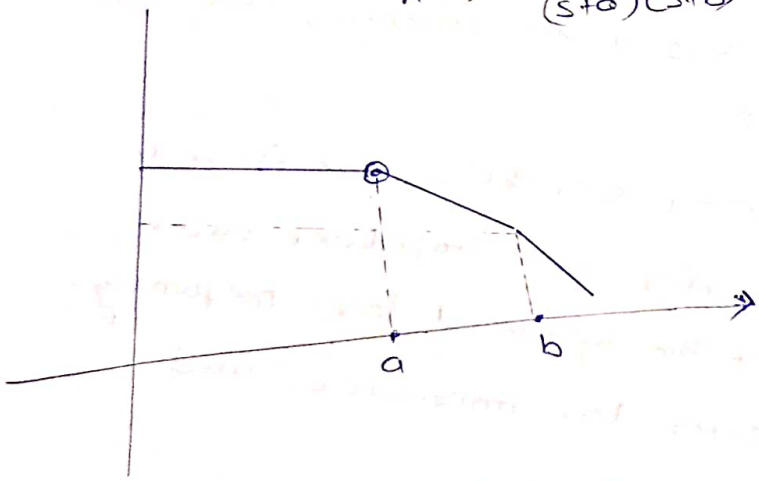

ω_H $\min(\omega_{H_1}, \omega_{H_2})$

High pass filter

$$H(s) = \frac{ks}{(s+a)}$$

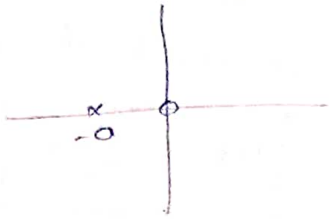

$\boxed{\omega_1 = a}$

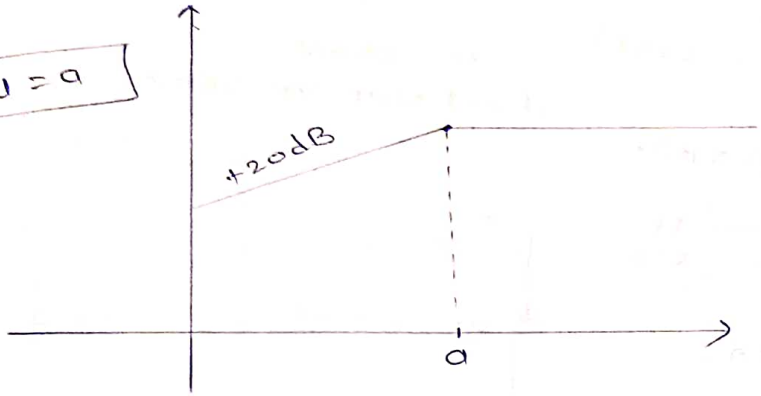

$$H(s) = \frac{ks^2}{(s+a)(s+b)}$$

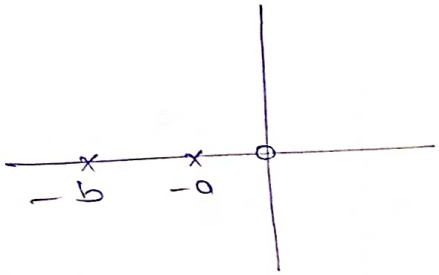

$\omega_{11} = a$

$\omega_{12} = b$

$\omega_1 = \max(a, b) = b$

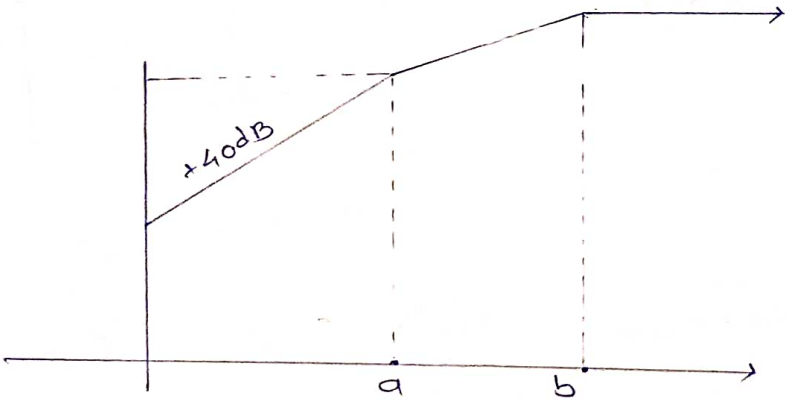

Cutoff due to a capacitor →

time constant of capacitor T_c

$$\boxed{\omega_c = \frac{1}{T_c}}$$

Q)

$V_{CC} = 3$ volt

$V_T = 25mV$

if not given $V_T = 26mV$

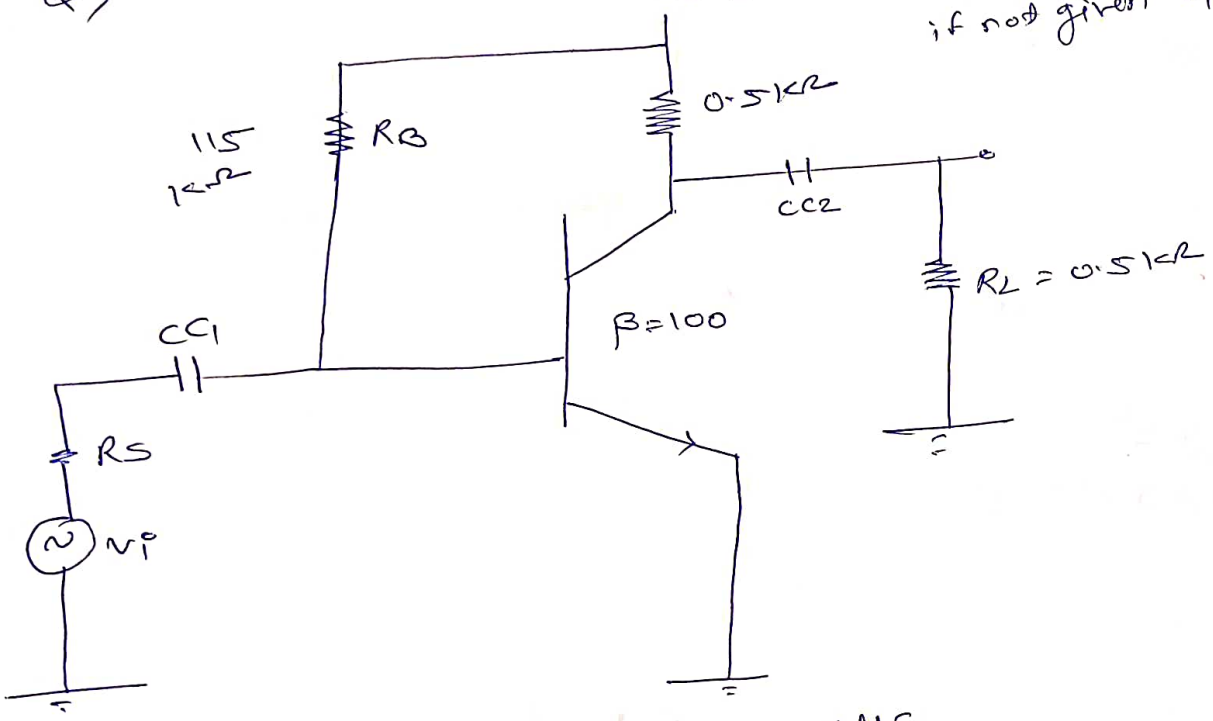

a) $CC_1 = 1\mu F$, $R_S = 0$, $CC_2 = 1\mu F$

f_l ____ Hz (upto two decimal)

b) $CC_2 = 1\mu F$, $CC_1 = 1\mu F$, $R_S = 100\Omega$

f_l ____ Hz (upto two decimal)

Soln:-

$I_B = 0.02mA$

$I_C = 2mA$.

$$r_\pi = \frac{V_T}{I_B} = \frac{0.025}{0.02} = 1.25\ k\Omega$$

$$g_m = \frac{I_C}{V_T} = \frac{2}{0.025} = 80\ mA/V.$$

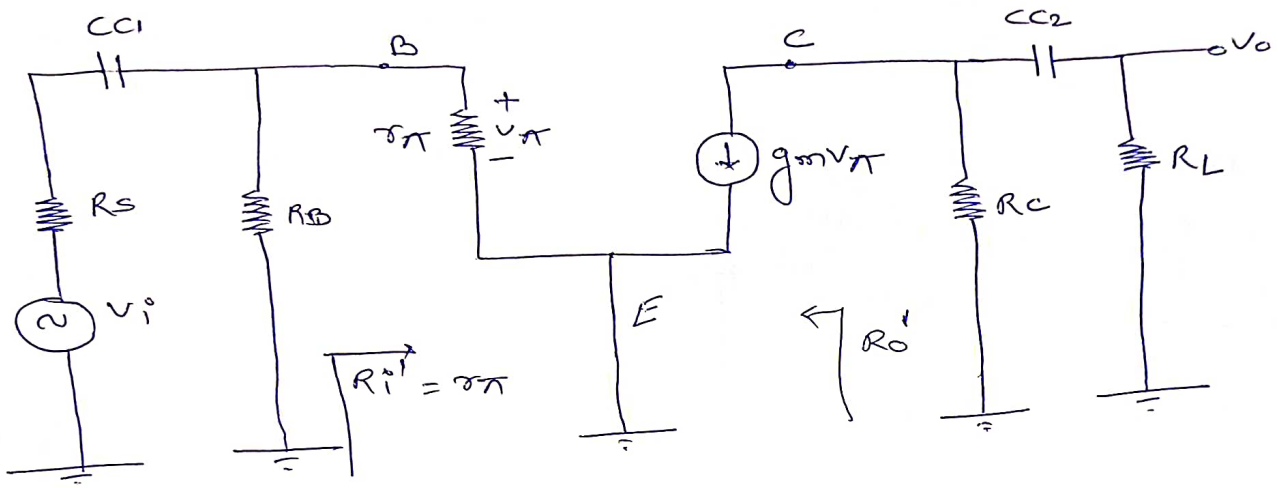

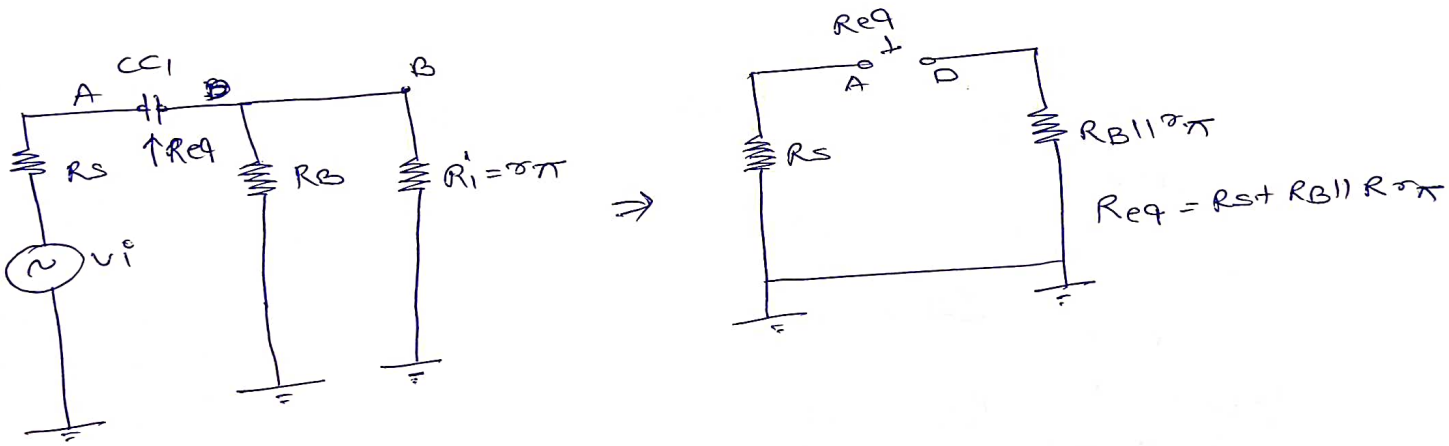

$$T_1 = R_{eq} C_{C1}$$

$$(\omega_{L1}) = \frac{1}{T_1} = \frac{1}{R_{eq} C_{C1}} = \frac{1}{(R_S + R_B \| r_\pi)\, C_{C1}} \quad \text{rad/sec}$$

$$f_{L1} = \frac{1}{2\pi R_{eq} C_{C1}}$$

RS

a) $f_{l_1} = \dfrac{1}{2\pi R_{eq} C_{C_1}} = 128.70\,Hz$ — (a)

$R_S = 100\,\Omega$

b) $f_{l_1} = \dfrac{1}{2\pi R_{eq} C_{C_1}} = 111.35\,Hz$ — (b)

$C_{C_1} \rightarrow 128.70$ — a

111.35 — b

$R_o' = \infty$

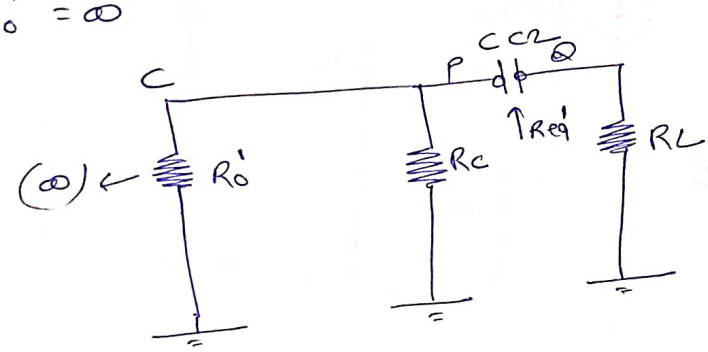

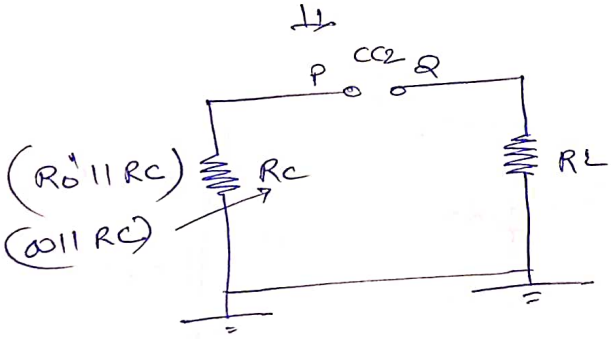

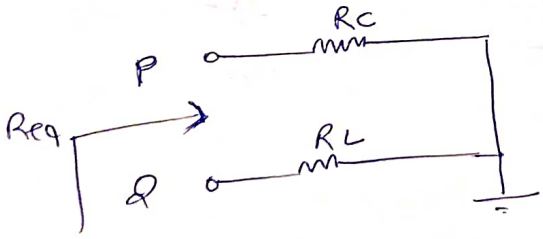

$R_{eq}' = (R_C + R_L)$

$\omega_{l_2} = \dfrac{1}{T_2} = \dfrac{1}{R_{eq}' C_{C2}} = \dfrac{1}{(R_C + R_L) C_{C2}}$

$f_{l_2} = \dfrac{1}{2\pi (R_C + R_L) C_{C2}}$

$CC_2 \longrightarrow f_{l2}$

$159.15\,Hz \longrightarrow Hz$

(a, b)

$f_l \rightarrow$ lower cutoff frequency.

(a) $f_l = \max(f_{l1}, f_{l2})$

$= \max(128.70, 159.15)$

$= 159.15\,Hz$

(b) $f_l = \max(f_{l1}, f_{l2})$

$= (111.135, 159.19)$

$= 159.15\,Hz.$

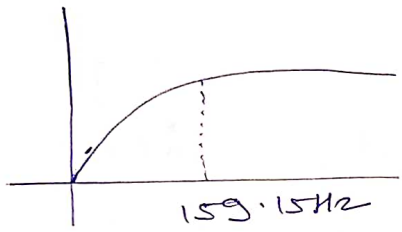

Finding voltage gain CC_1, CC_2 (S.C.)

(a) $\frac{V_o}{V_i} = \underline{-20}$ (maximum possible gain)

b) $\frac{V_o}{V_i} =$

G 2.0

A

Q)

$V_T = 25mV$

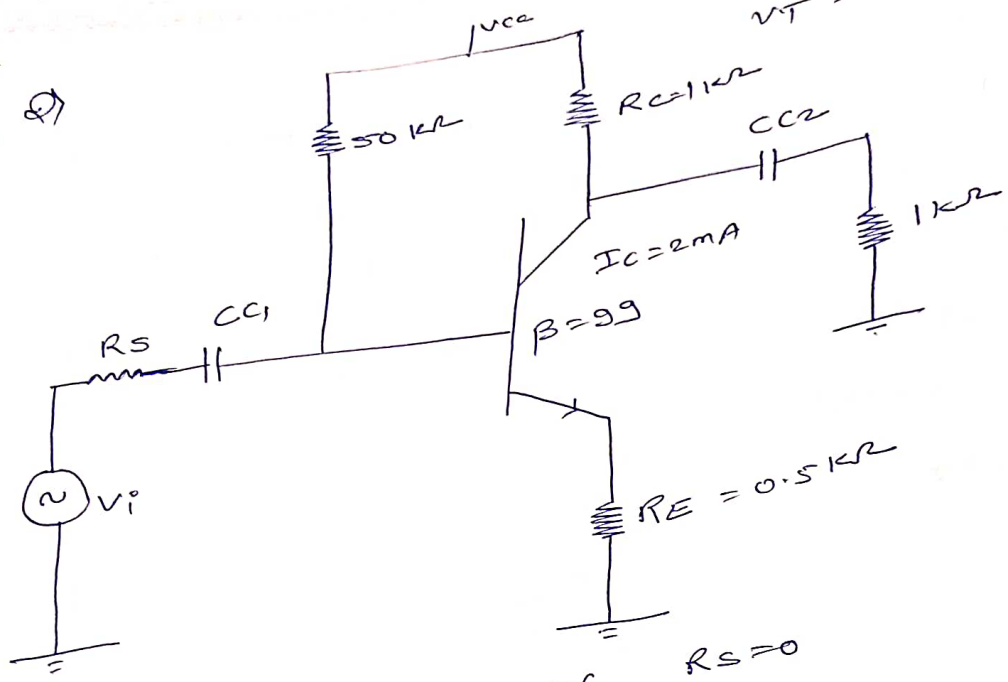

$R_S = 0$

a) $CC_1 = 0.5\mu F$, $CC_2 = 1\mu F$

f_l ____ Hz

b) $CC_1 = 1\mu F$, $CC_2 = 1\mu F$, $R_S = 200\Omega$

f_l ____ Hz

Sol:- π model

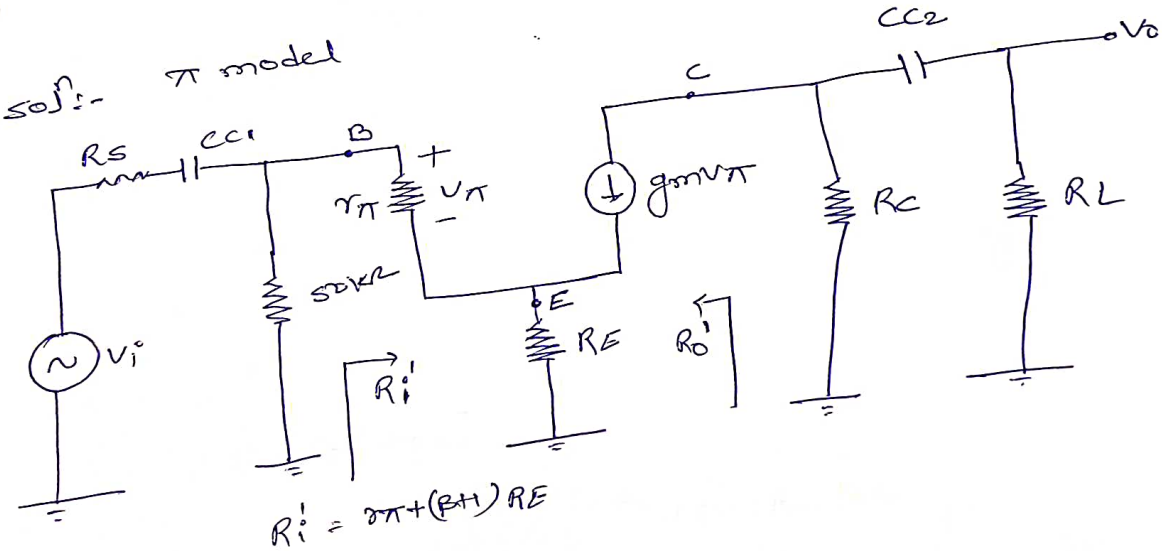

$R_i' = r_\pi + (\beta+1) R_E$

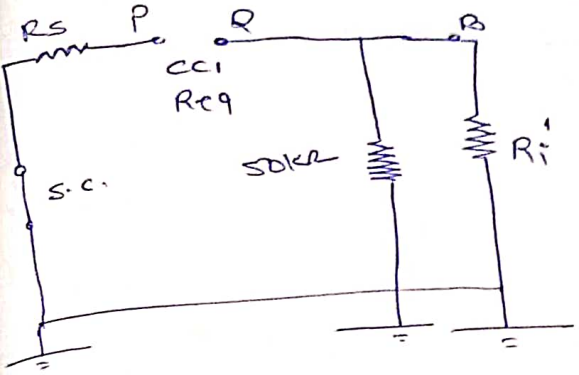

$\Rightarrow$

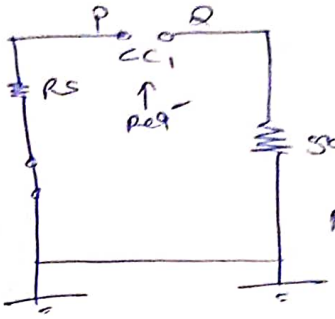

$$R_{eq} = (R_S + R_B \| R_i')$$

$$\boxed{\begin{aligned} T_1 &= R_{eq} \cdot CC_1 \\ \omega_{l1} &= \frac{1}{T_1} \end{aligned}}$$

$R_o' = \infty$

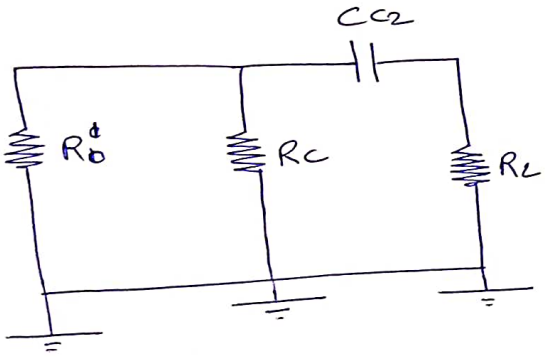

$\Rightarrow$

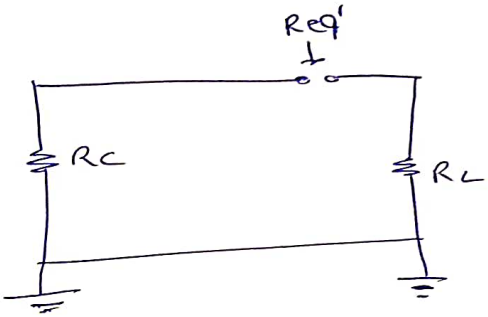

$$R_{eq}' = (R_C + R_L)$$

$$T_2 = R_{eq}' \, CC_2$$

$$\omega_{l2} = \frac{1}{T_2}$$

G 2.0

Common collector Amplifier / voltage follower

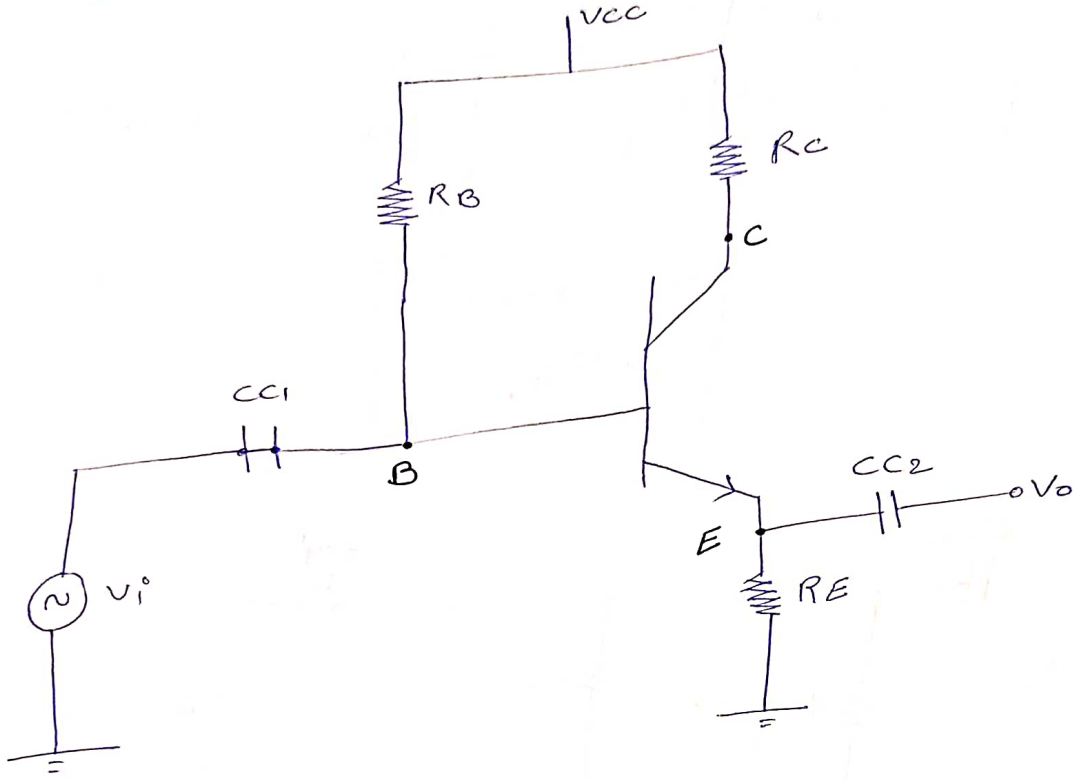

Sol:-

π model

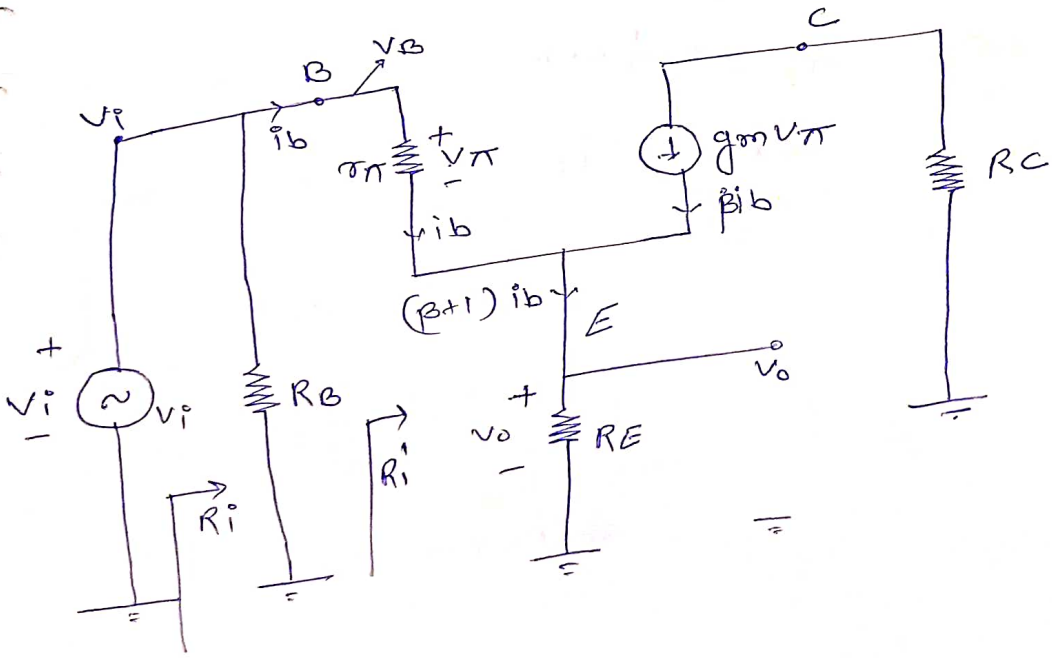

$$R_i' = \frac{V_B}{i_b}$$

$$V_B - i_b r_\pi - (\beta+1) i_b R_E = 0$$

$$V_B = i_b [r_\pi + (\beta+1) R_E]$$

$$R_i' = \boxed{\frac{V_B}{i_b} = r_\pi + (\beta+1) R_E}$$

$$\frac{V_o}{V_i} \longrightarrow$$

$$V_o = (\beta+1) i_b \cdot R_E$$

$$V_i = V_B = [r_\pi + (\beta+1) R_E] \, i_b$$

$$\frac{V_o}{V_i} = \frac{(\beta+1) i_b R_E}{[r_\pi + (\beta+1) R_E]}$$

$$\boxed{\frac{V_o}{V_i} < 1}$$

if $(\beta+1) R_E \gg r_\pi$

$$\frac{V_o}{V_i} \cong \frac{(\beta+1) R_E}{(\beta+1) R_E} = 1$$

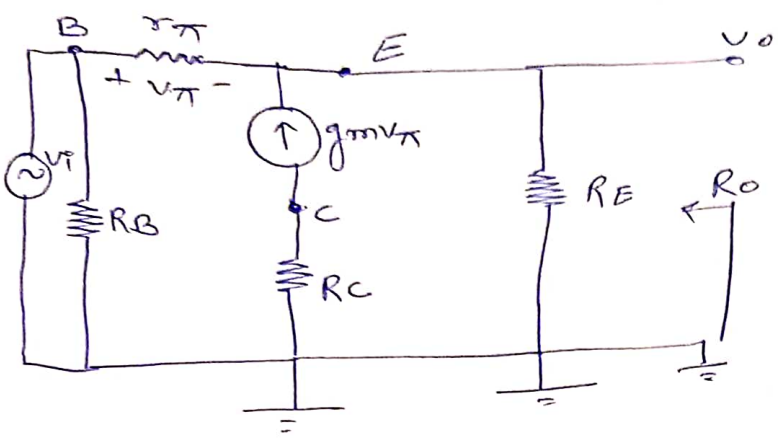

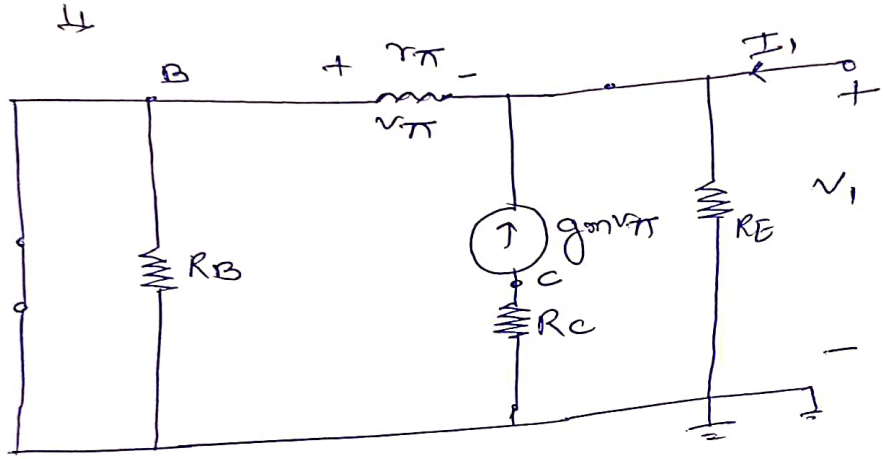

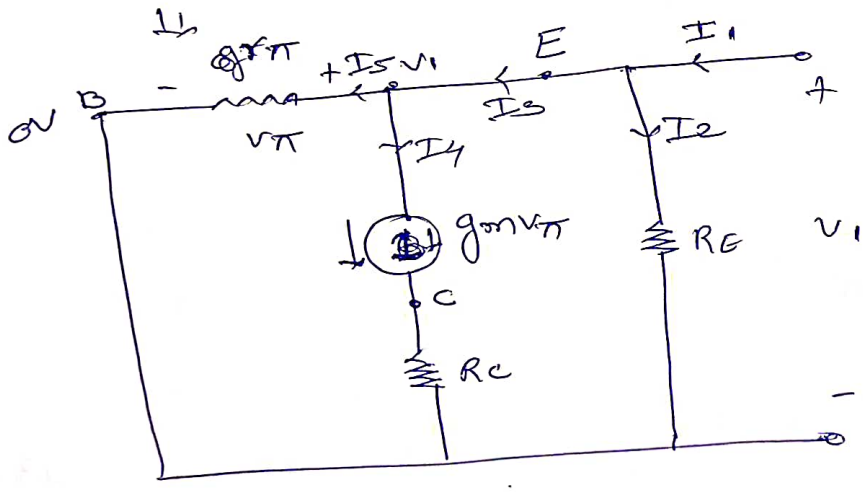

$$I_1 = I_2 + I_3 = I_2 + I_4 + I_5 \quad \text{— (i)}$$

$$I_2 = \frac{V_1}{R_E} \quad \text{— (ii)}$$

$$I_4 = g_m V_\pi \quad — (iii)$$

$$I_5 = \frac{V_1 - 0}{r_\pi} = \frac{V_1}{r_\pi} \quad — (iv)$$

$$I_4 = g_m V_1 \quad — (v)$$

$$V_\pi = I_5 r_\pi = \frac{V_1}{r_\pi} \cdot r_\pi = V_1$$

$$I_1 = \frac{V_1}{R_E} = \frac{V_1}{R_E} + g_m V_1 + \frac{V_1}{r_\pi}$$

$$R_o = \frac{V_1}{I_1} = \frac{1}{\left(\frac{1}{R_E} + g_m + \frac{1}{r_\pi}\right)}$$

$$\boxed{R_o = \frac{1}{\left(\frac{1}{R_E} + \frac{1}{(1/g_m)} + \frac{1}{r_\pi}\right)}}$$

$R_1, R_2, R_3 \rightarrow$ parallel

$$\frac{1}{R_{eq}} = \frac{1}{R_1} + \frac{1}{R_2} + \frac{1}{R_3} \qquad R_{eq} = \frac{1}{\frac{1}{R_1} + \frac{1}{R_2} + \frac{1}{R_3}}$$

$$\boxed{R_o = R_E \parallel \frac{1}{g_m} \parallel r_\pi}$$

H.W

add

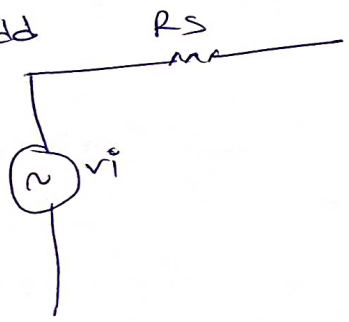

G 2.0

Common Base Amplifier

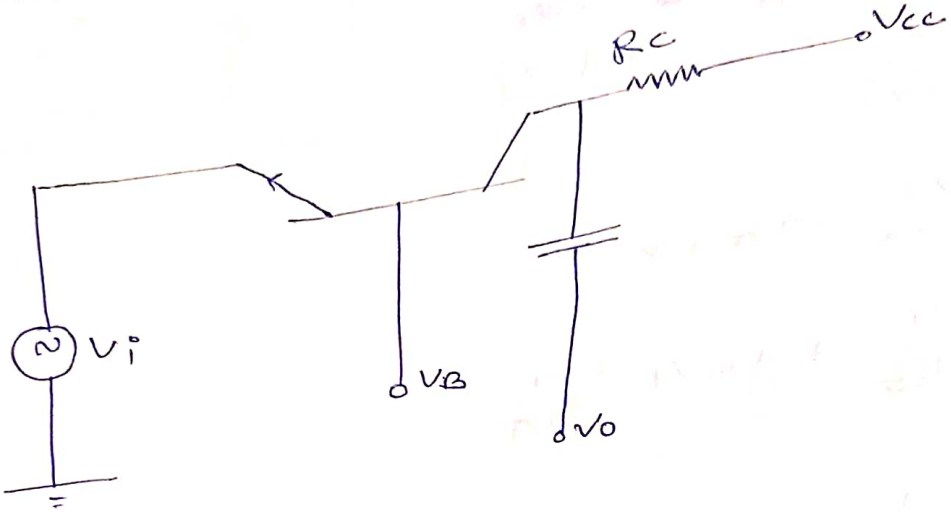

ac model

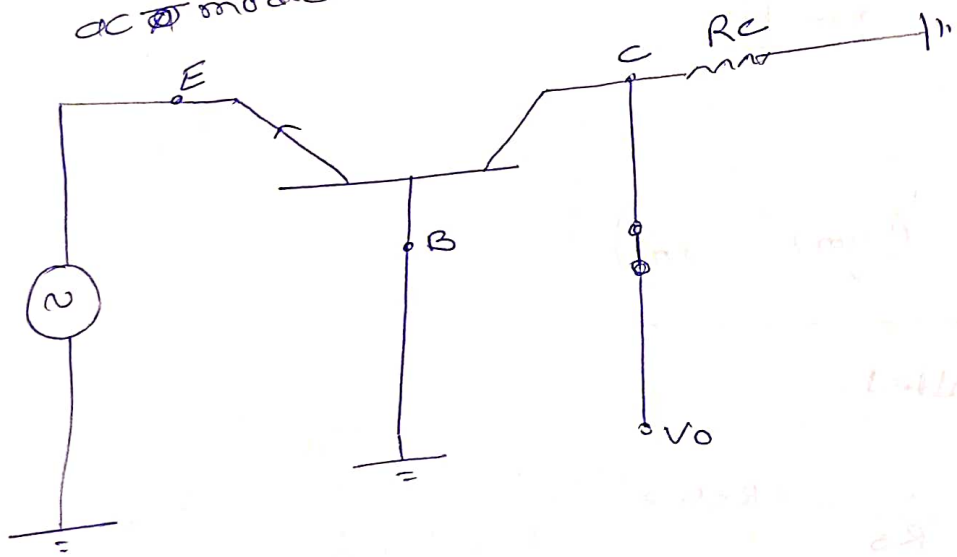

π model

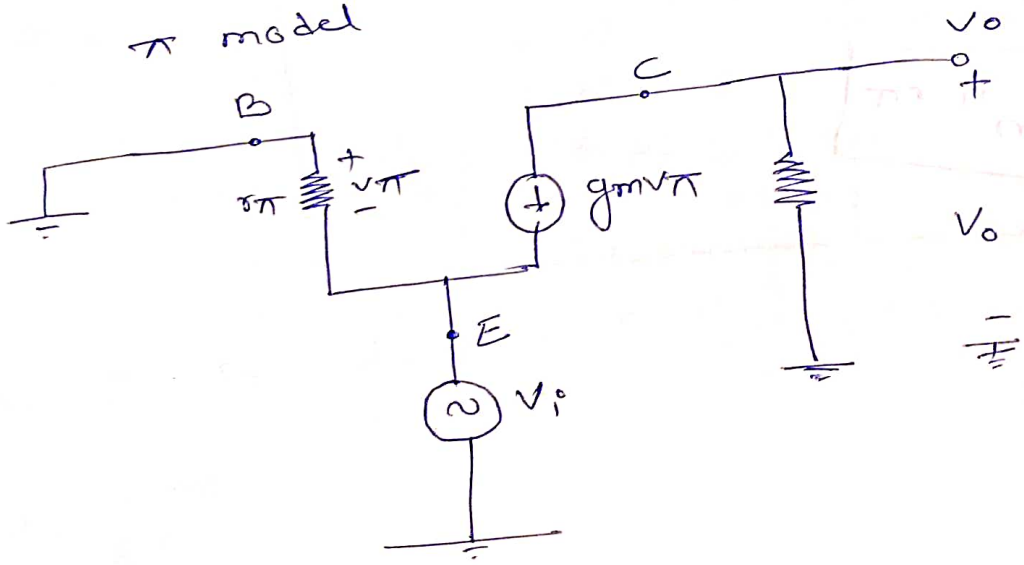

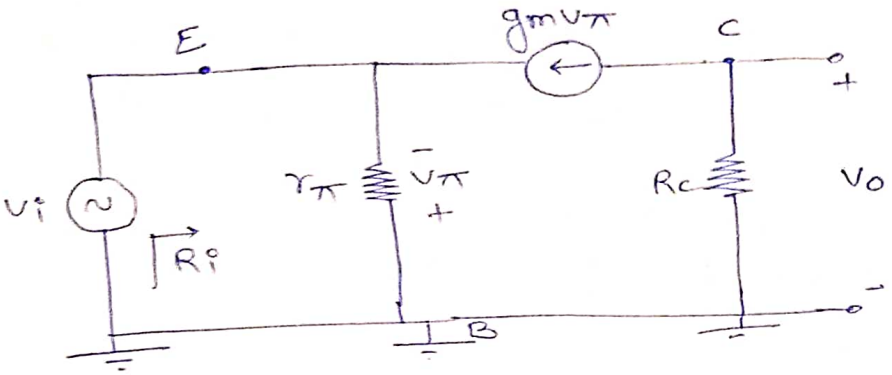

II,

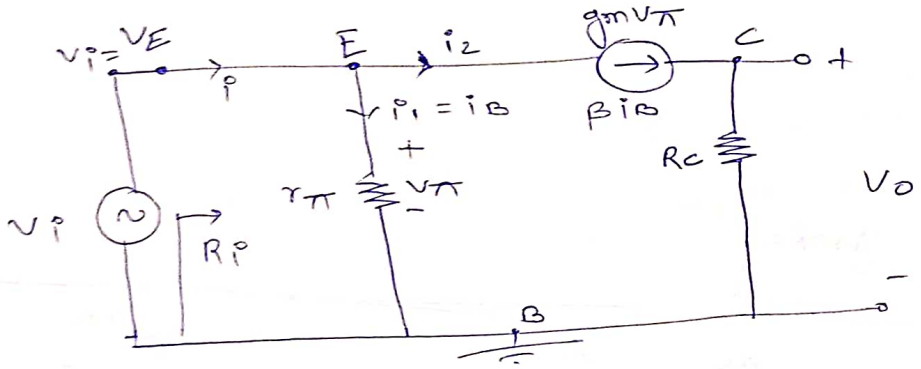

$$R_i = \frac{V_E}{i} \quad \text{—— (I)}$$

$$V_i = V_\pi = V_E \quad \text{— (II)}$$

$$i = i_1 + i_2 = \frac{V_\pi}{r_\pi} + g_m V_\pi$$

$$i = \frac{V_E}{r_\pi} + g_m V_E$$

$$R_i = \frac{V_E}{i} = \frac{V_E}{\frac{V_E}{r_\pi} + g_m V_E} = \frac{1}{\frac{1}{r_\pi} + \frac{1}{(1/g_m)}}$$

$$R_i = r_\pi \parallel \frac{1}{g_m} = \frac{r_\pi \cdot \frac{1}{g_m}}{r_\pi + 1/g_m} = \frac{r_\pi}{r_\pi g_m + 1}$$

$$\boxed{R_i = \frac{r_\pi}{\beta + 1}}$$ IMP

Analoge Electronics

$$i = i_B + \beta i_B$$
$$= (\beta+1)\, i_B$$

$$V_E = V_i = V_\pi = i_B r_\pi$$

$$R_i = \frac{i_B r_\pi}{(\beta+1)\, i_B}$$

$$\boxed{R_i = \frac{r_\pi}{\beta+1}}$$

$$V_o = i_2 R_C = g_m V_\pi \cdot R_C$$

$$V_i = V_E = V_\pi$$

$$\boxed{\frac{V_o}{V_i} = \frac{g_m V_\pi R_C}{V_\pi} = g_m R_C}$$

$$r_\pi \,||\, \frac{1}{g_m} R_E$$

	R_i	R_o	A_V	A_I	$\left(\frac{r_\pi}{(\beta+1)}\right) \,\|\|\, R_E$
CE	moderate	moderate	moderate to high	moderate to high	
CB	lowest	highest	highest	lowest	
CC	highest	lowest	lowest $\simeq 1$	highest	

High frequency Analysis of BJT Amplifier

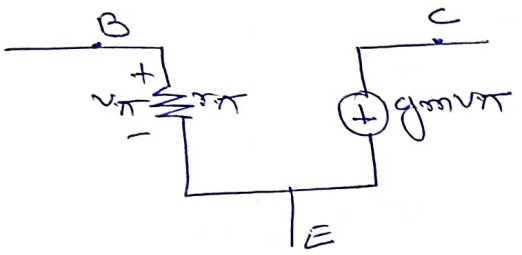

⇒ This valid for small AC signal.

⇒ Valid for low frequency

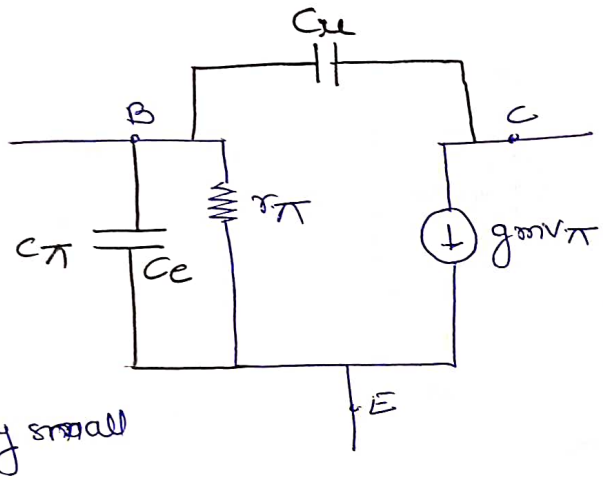

⇒ small signal, high frequency.

$\omega \rightarrow$ very small

$\frac{1}{j\omega C_e} \rightarrow$ high value

$\frac{1}{j\omega C_\mu} \rightarrow$ high value

Short circuit current gain :-

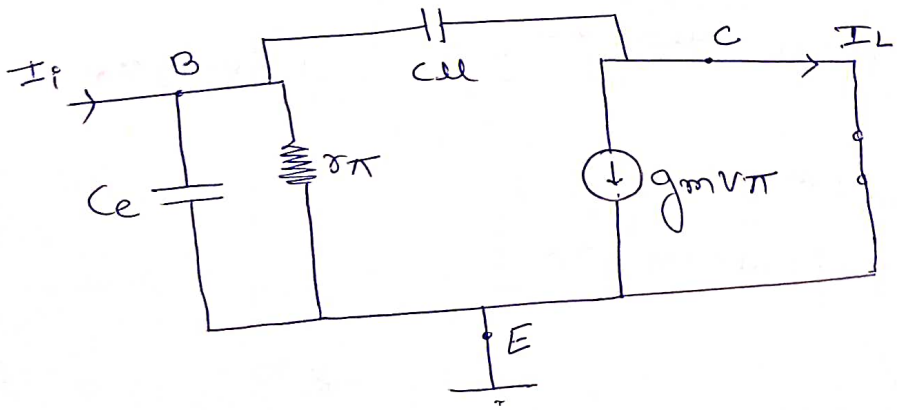

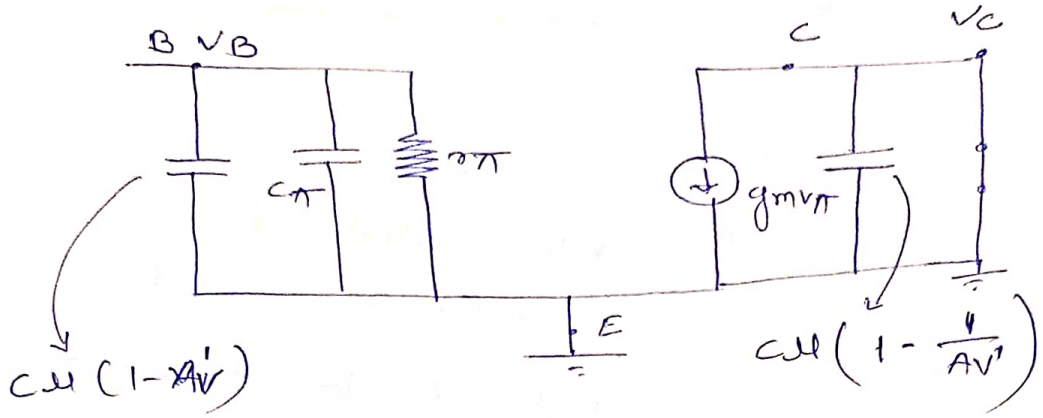

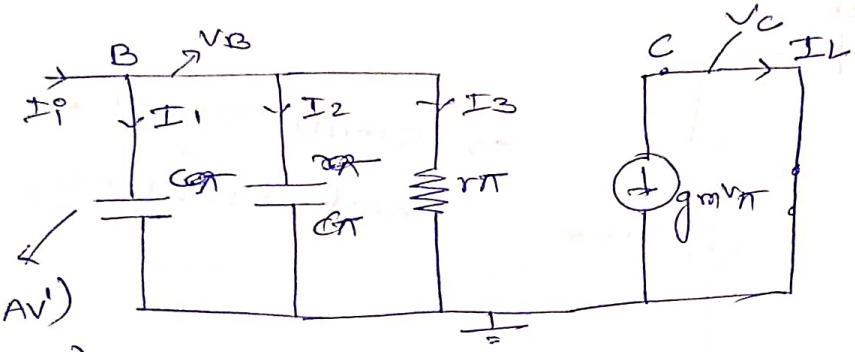

$= C_\mu(1-0)$

$= C_\mu$

$$A_V' = \frac{V_C}{V_B} = \frac{0}{V_B} = 0$$

$$I_L = -I_C = -g_m v_\pi \quad \text{— (1)}$$

$$I_i = I_1 + I_2 + I_3 = \frac{V_\pi}{\frac{1}{j\omega C_\mu}} + \frac{V_\pi}{\frac{1}{j\omega C_\pi}} + \frac{V_\pi}{r_\pi}$$

$$\frac{I_L}{I_C} = A_I = \frac{-g_m \cancel{V_\pi}}{\cancel{V_\pi}\left[j\omega C_\mu + j\omega C_\pi + \frac{1}{r_\pi}\right]}$$

multiply by r_π

$$A_I = \frac{-g_m r_\pi}{\left[1 + j\omega\left[C_\mu + C_\pi\right] r_\pi\right]}$$

$$A_I = \frac{-\beta}{1 + j\omega\left[C_\pi + C_\mu\right] r_\pi}$$

$$\omega_\beta = \frac{1}{r_\pi (C_\pi + C_\mu)}$$

$$A_I = \frac{-\beta}{1 + j\omega \cdot \frac{1}{\omega_\beta}}$$

$\omega = 2\pi f$

$$\boxed{A_I = \frac{-\beta}{1 + \frac{j\omega}{\omega_\beta}} = \frac{-\beta}{1 + \frac{jf}{f_\beta}}}$$

→ It represents low pass filter

$$\boxed{f_\beta = \frac{1}{2\pi (C_\pi + C_\mu) r_\pi}}$$

3-dB cut off frequency (s.c.)

$$|A_I| = \frac{\beta}{\sqrt{1 + \left(\frac{f}{f_\beta}\right)^2}}$$

at $f = 0 \rightarrow (A_I)_{max} = \beta = C_\mu$

at $f = f_\beta \rightarrow |A_I| = \frac{\beta}{\sqrt{1+1}} = \frac{\beta}{\sqrt{2}}$

at $f = f_T$,

$|A_I| = 1$

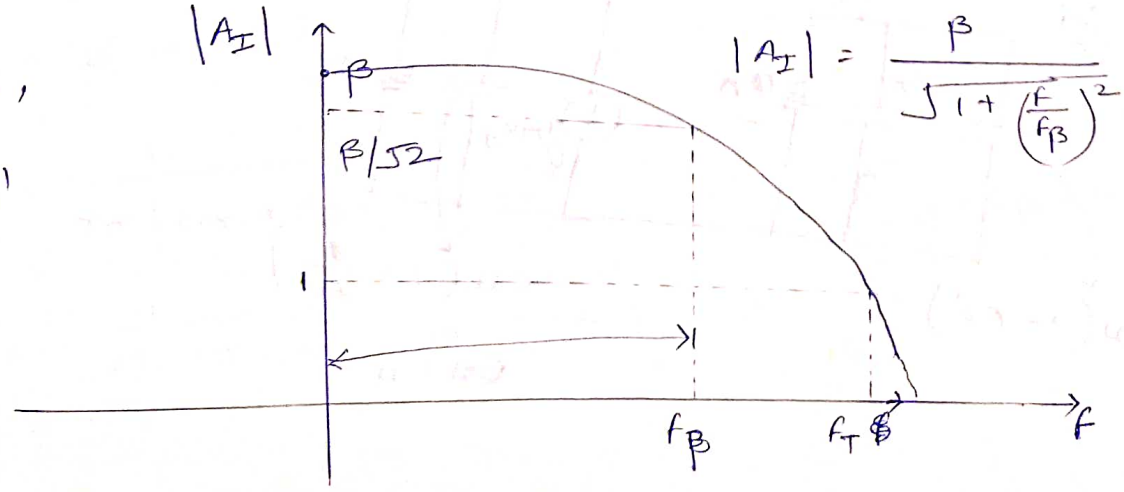

$$|A_I| = \frac{\beta}{\sqrt{1 + \left(\frac{f}{f_\beta}\right)^2}}$$

G 2.0

$$1 = \frac{\beta}{\sqrt{1+\left(\frac{f_T}{f_\beta}\right)^2}}$$

~~in general~~

$$1+\left(\frac{f_T}{f_\beta}\right)^2 = \beta^2$$

$$\boxed{f_T = \sqrt{\beta^2-1}\cdot f_\beta} \simeq \beta \cdot f_\beta$$

$$\boxed{f_T \cong \beta f_\beta}$$ – Unity gain frequency

– gain Bandwidth product

e.g.:-

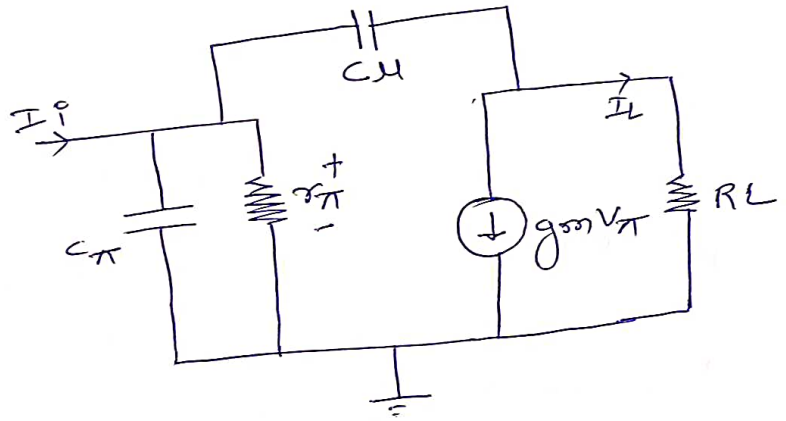

≡

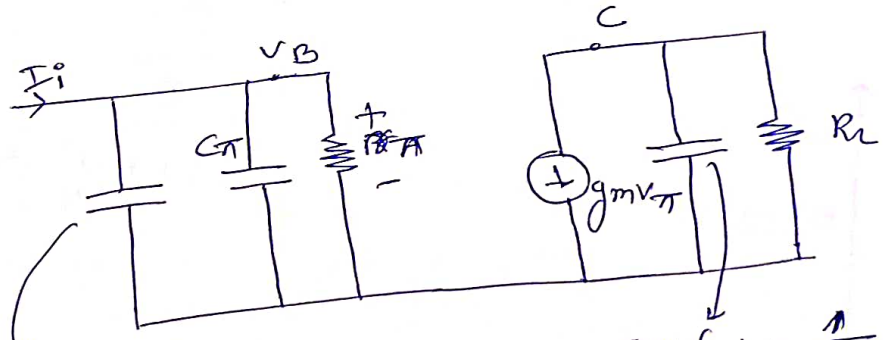

$C_\mu(1-A_{v'})$

$C_\mu\left(1-\frac{1}{A_{v'}}\right)$

$\equiv C_\mu$

$$A_V' = \frac{V_C}{V_B}$$

$C_\pi \rightarrow 100pF$

$C_\mu \rightarrow 3pF$

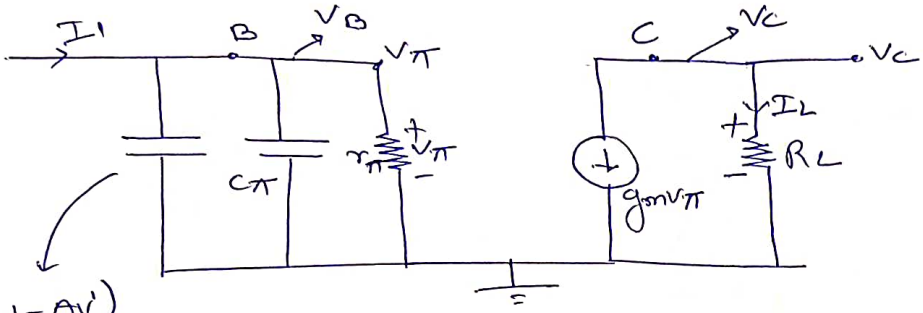

$C_\mu(1-A_V')$

$C_\mu(1+g_m R_L)$

$$A_V' = \frac{V_C}{V_B} = \frac{I_L R_L}{V_\pi} = \frac{-g_m \cancel{V_\pi} R_L}{\cancel{V_\pi}}$$

$$\boxed{A_V' = -g_m R_L}$$

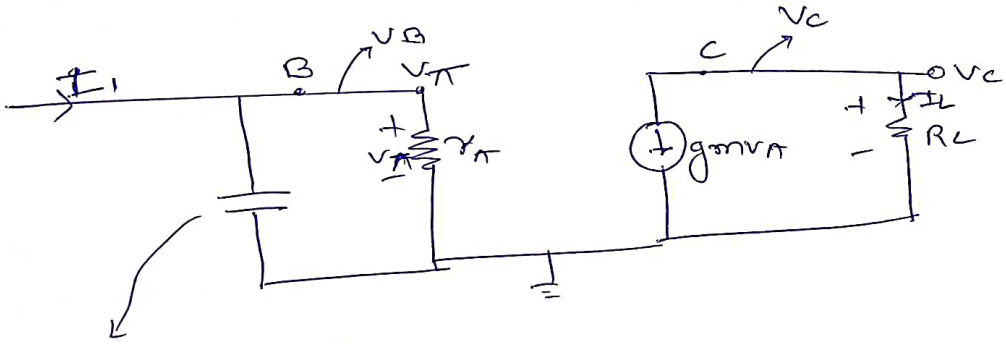

$C_\pi + C_\mu(1+g_m R_L)$

$$\omega_H = \frac{1}{r_\pi\left[C_\pi + C_\mu(1+g_m R_L)\right]}$$

$$f_H = \frac{1}{2\pi r_\pi\left[C_\pi + C_\mu(1+g_m R_L)\right]}$$

$$\boxed{f_H < f_\beta < f_T}$$

$$A_I' = \frac{-\beta}{1 + jf/f_H}$$

Imp

$$f_T = \beta \cdot f_\beta = \beta \cdot \frac{1}{2\pi r_\pi [C_e + C_\mu]}$$

$$\beta = \frac{g_m \cancel{r_\pi}}{2\pi \cancel{r_\pi} [C_e + C_\mu]}$$

$$f_T = \frac{I_C}{2\pi V_T (C_e + C_\mu)}$$

$$f_\beta = \frac{1}{2\pi \boxed{r_\pi} (C_e + C_\mu)}$$

$$f_T = \beta f_\beta \propto I_C \quad , \quad r_\pi = \frac{V_T}{I_B}$$

Early Effect :→ OR Base width modulation

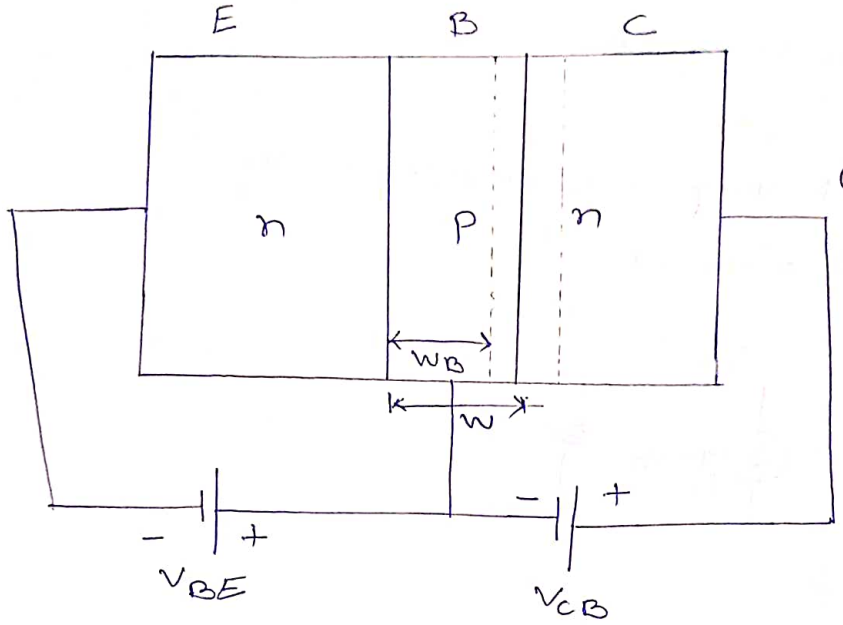

$V_{CB}\uparrow$

① depletion region width increased and effective $W_B\downarrow$

① $V_{CB}\uparrow$ depletion region width increased and effective $W_B\downarrow$

② Ideally we assume that the collector current is independent of Reverse bias C-B voltage V_{CB}

③ when the increase the R.B. voltage across the collector-based junction then effective basewidth decreases. This change in effective base-width due to change in collector-base reverse bias voltage is called as base-width modulation OR Early effect.

→ due to Early effect the number of recombination decreases inside the base region because of less effective basewidth and due to this

a) collector current $I_c \uparrow$

b) current gain β will increase

c) α, γ will also increase.

Due to Early effect their is a Resistance r_o present in hybrid π model

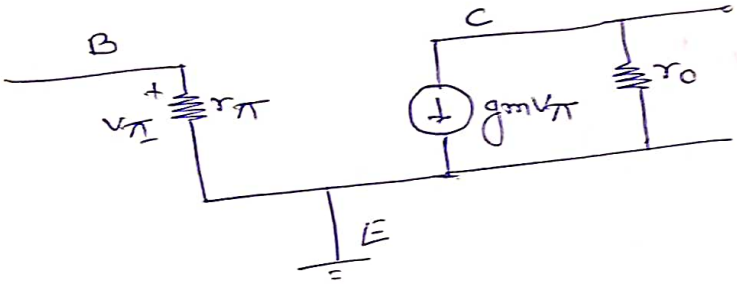

$$r_o = \frac{V_A}{I_{CQ}}$$

, where $V_A \rightarrow$ Early voltage

, ideal value of $V_A \rightarrow \infty$

finite & high