MOSFET

metal oxide semiconductor field effect transistor :→

(n-type MOSFET)

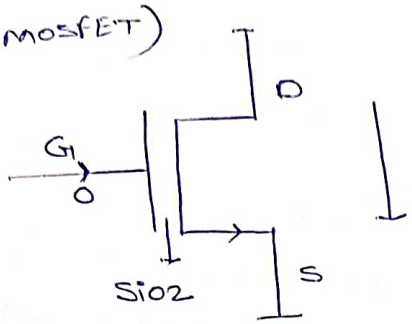

① MOSFET is also three terminal device

G → Gate → controlling terminal

D → Drain

S → source

② MOSFET is a symmetrical device in the sense that its gain & source are ~~symmetrical~~ simmilar.

③ Current through Gate terminal is always zero due to SiO2 layer (perfect insulator)

④ Gate terminal controls the current that is flowing between Drain & source. Basically Gate terminal is responsible is a formation of channel (inversion layer) between Drain & source and also thickness of this channel (resistance of this channel) is controlled by gate voltage & thus the current flowing between drain & source by Gate terminal

(4) In case of n-type MOSFET (inserva inversion layer - n type) current flow due to flow of electrons and n-type MOSFET drain is at higher potential & source is at lower potential (i.e. current flow from D to S.)

(5) In case of p-type MOSFET (inversion layer is p-type) current flow due to flow of holes and in p-type MOSFET drain is at lower potential and source is at higher potential (i.e current flow from S to D)

~~D-type MOSFET~~

(6) Threshold voltage (V_{th}) :- minimum Gate to source voltage required for creation of channel (inversion layer) b/w drain & source is called as threshold voltage.

n-type MOSFET

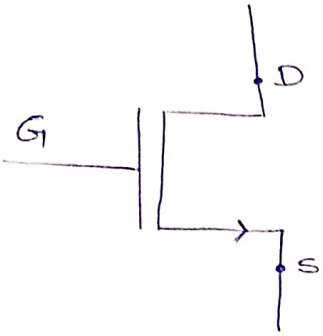

n-type MOSFET

① if $V_{GS} < V_{th}$ — OFF

(inversion layer is not created)

$I_{DS} = 0$

② if $V_{GS} \geq V_{th}$ — ON

a) if $V_{DS} < (V_{GS} - V_{th})$ → triode region or linear region

$$I_{DS} = k_n \left[2(V_{GS} - V_{th}) V_{DS} - V_{DS}^2 \right]$$

where

k_n → conduction parameter

$$k_n = \frac{\mu_n C_{ox} W}{2L} \quad mA/V^2$$

$\mu A/V^2$

μ_n → $\bar{e}$ mobility

C_{ox} → $\frac{\text{oxide layer capacitance}}{\text{area}}$.

$\frac{W}{L}$ → aspect ratio

$V_{DS} = V_{GS} - V_{th}$

$I_{DS} = k_n [V_{GS} - V_{th}]^2$

b) $V_{DS} \geq (V_{GS} - V_{th})$

saturation region

$V_{DS} = V_{GS} - V_{th}$

$I_{DS} = k_n [V_{GS} - V_{th}]^2$

— saturation region

Threshold voltage

n type

Enhancement type

$V_{th} \rightarrow +ve$

Depletion - type

$V_{th} \rightarrow (-ve)$

p-type MOSFET (S → D)

i) V_{SG}

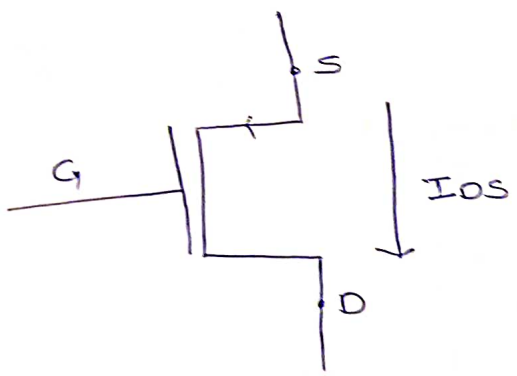

if $V_{SG} < |V_{TP}| \rightarrow$ OFF

(inversion layer not created)

Sol^n

Step ① Check Mosfet ON / OFF

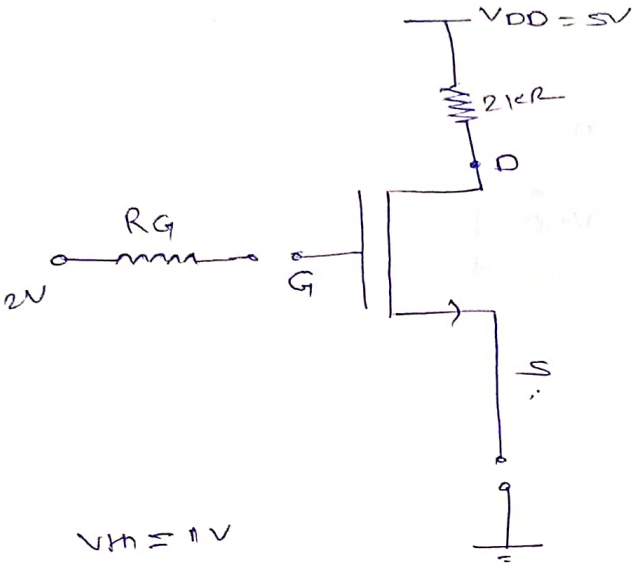

$V_{th} = 1V$

$V_G = 2V$

$V_S = 0V$

$V_{GS} = V_G - V_S = 2V > V_{th}$

Mosfet is ON condition
(Default - saturation region)

Step ②

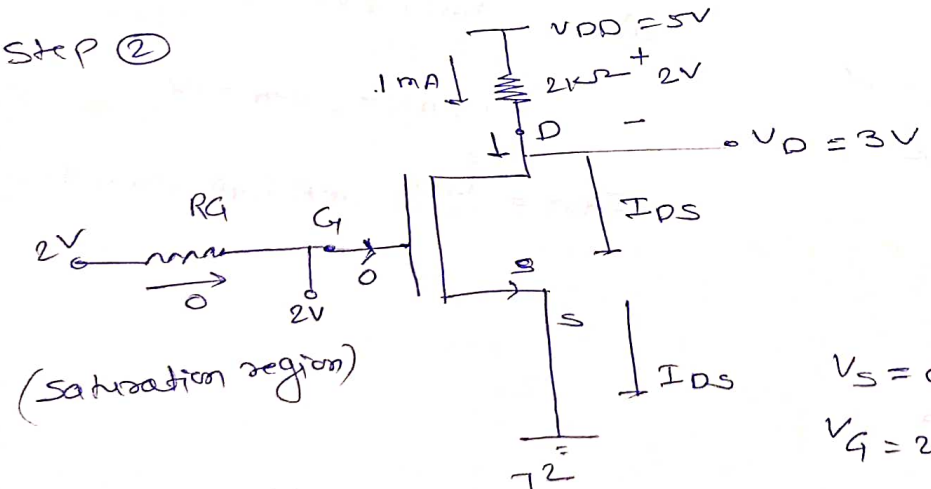

(Saturation region)

$V_S = 0$

$V_G = 2V$

$V_{GS} = 2V$

$V_D = 3V$

$V_{DS} = 3V$

$I_{DS} = k_n [V_{GS} - V_{th}]^2$

$= 1 [2 - 1]^2$

$= 1 \text{ mA}$

$V_{GS} - V_{th} = 1V$

b)

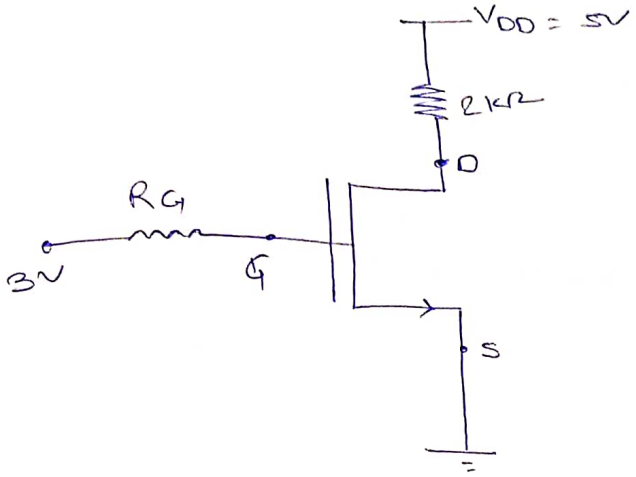

$k_n = \frac{\mu_n C_{ox} W}{2L} = 1mA/V^2$

I_{DS} ——— mA

I_D

Soln:-

Step ① D.C test

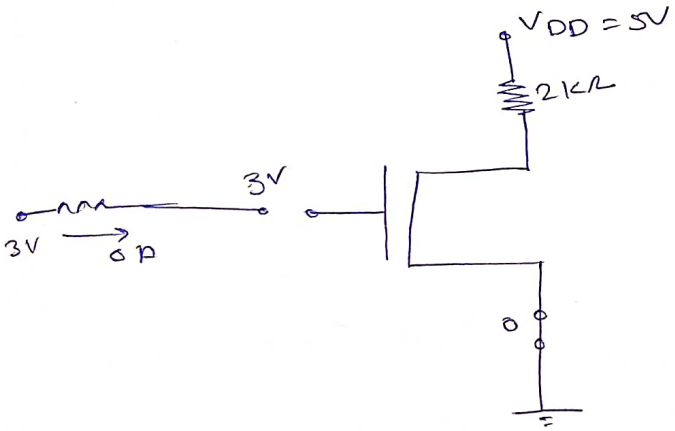

$V_G = 3$

$V_S = 0$

$V_{GS} = 3$

$V_{GS} = 3 - 0 = 3 > V_{th}$ (ON)

(saturation region)

Step ②

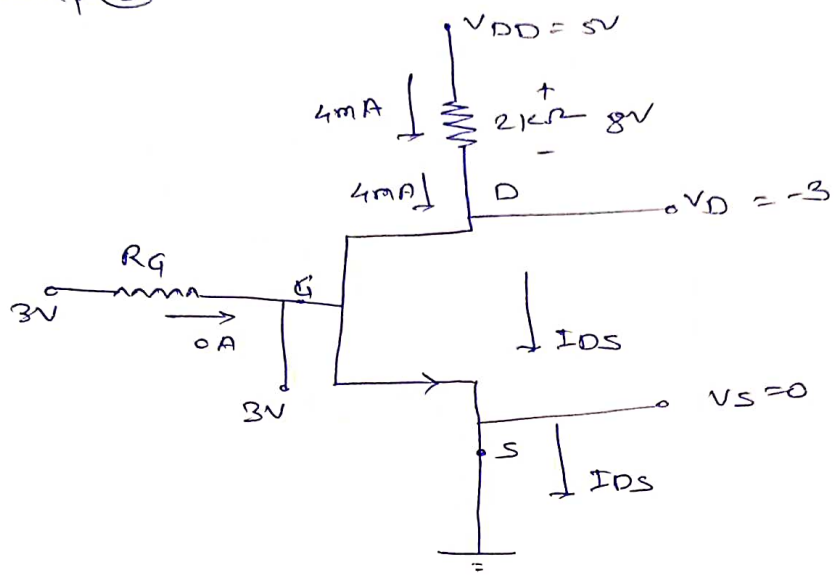

$V_{GS} = 3V$

$I_{DS} = k_n [V_{GS} - V_{th}]^2$

$= 1 [3-1]^2 = 4mA$

$V_D = -3V$

$V_S = 0V$

$V_G = 3V$

$V_{GS} = 3V$

$V_{GS} - V_{th} = 2V$

$V_{DS} = V_D - V_S = -3V$

$V_{DS} < V_{GS} - V_{th}$

$-3 < 2$

Now Mosfet is in triode region.

$$I_{DS} = K_n\left[2(V_{GS}-V_{th})V_{DS} - V_{DS}^2\right]$$

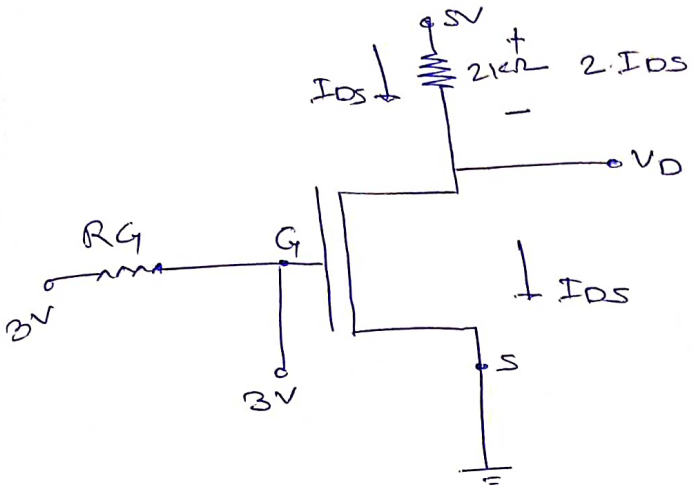

$V_S = 0V$

$V_G = 3V$

$V_{GS} = 3V$

$V_D = 5 - 2I_{DS}$

$$I_{DS} = 1\left[2(3-1)(5-2I_{DS}) - (5-2I_{DS})^2\right]$$

$$I_{DS} = \left[20 - 8I_{DS} - 4I_{DS}^2 - 25 + 20I_{DS}\right]$$

$$\Rightarrow 4I_{DS}^2 - 11I_{DS} + 5 = 0$$

$I_{DS} = 0.5746\ mA$, $I_{DS} = 2.1753\ mA$.

$V_D = 5 - 2I_{DS}$

$V_D = 5 - 2(0.5746)$

$= 3.84V$,

$V_{DS} = 3.84V$ & $V_{GS} - V_{th} = 2V < 3.84V$.

$\therefore$ $I_{DS} = 0.5746\ mA$ ✗ not possible

because it is not valid for triode region

$V_D = 5 - 2(2.18)$

$V_D = 0.64V$

$V_{DS} = 0.64V$. & $V_{GS} - V_{th} = 2V > 0.64V$.

c) $V_G = 2V$

$K_n = \frac{\mu_n C_{ox} W}{2L} = 1.5\ A/V^2$,

$V_{th} = 0.5V$

$I_{DS} =$ _____ mA

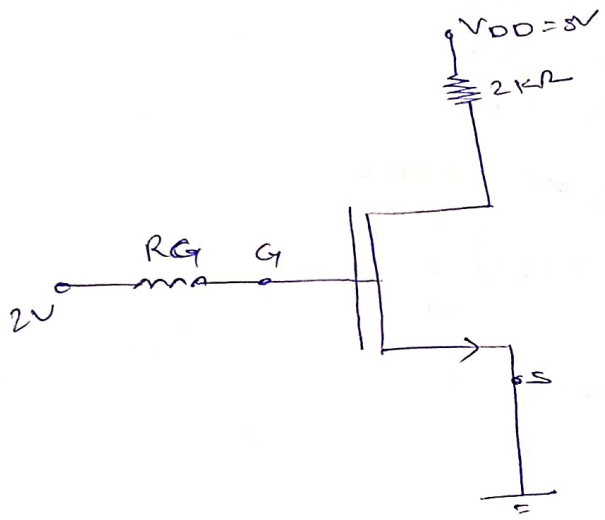

Sol^n:-

Step ① O.C. test

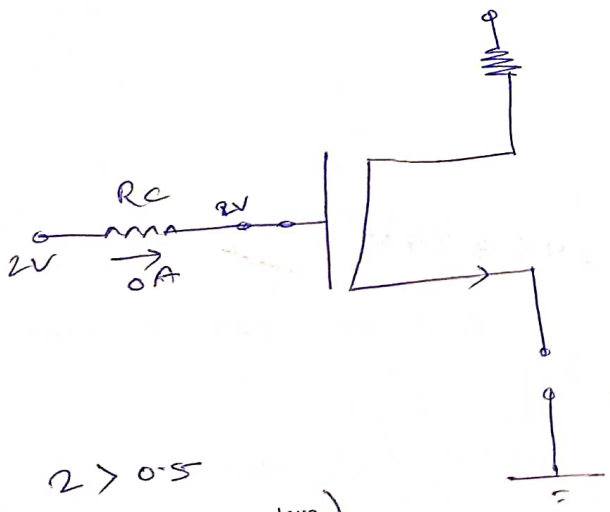

$2 > 0.5$

ON (saturation)

step ②

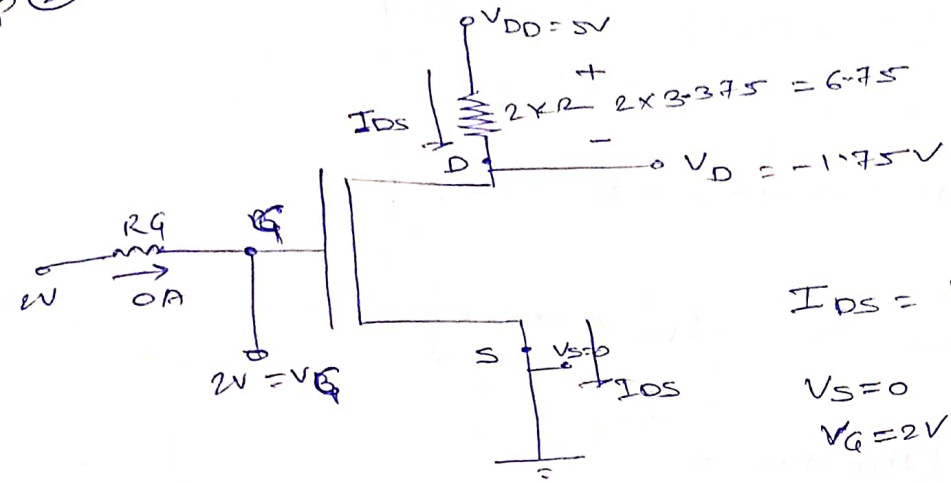

$I_{DS} = K_n \left[V_{GS} - V_{th}\right]^2$

$V_S = 0$

$V_G = 2V$

$I_{DS} = 1.5\left[2 - 0.5\right]^2$

$\boxed{I_{DS} = 3.375\,mA}$ ×.

$V_{DS} = ?$

$V_{GS} = 2V$

$V_{GS} = V_{th} = 1.5V.$

$V_{DS} < 1.5.$

↳ Triode region.

$I_{DS} = K_n\left[2(V_{GS} - V_{th})V_{DS} - V_{DS}^2\right]$

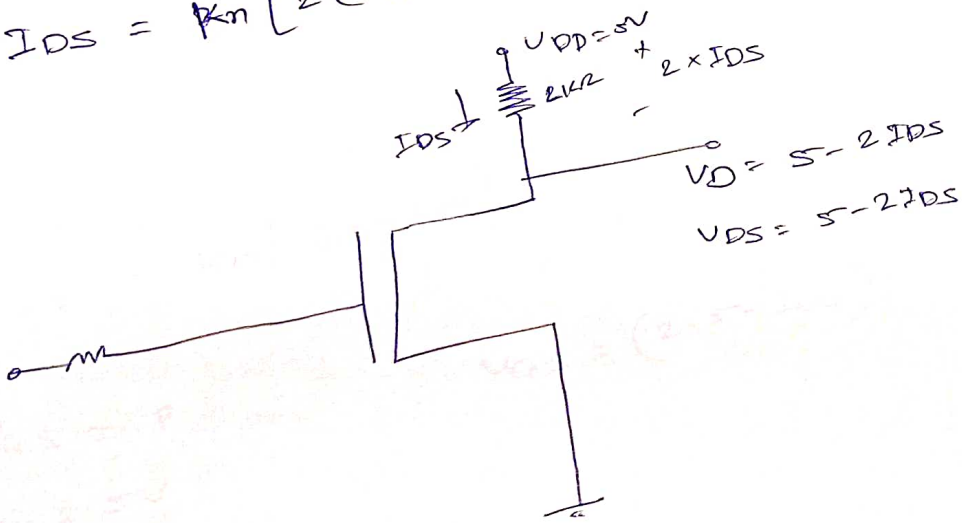

$$I_{DS} = 1.5\left[2(2-0.5)(5-2I_{DS}) - (5-2I_{DS})^2\right]$$

$$\frac{I_{DS}}{1.5} = \left[2(2-0.5)(5-2I_{DS}) - (5-2I_{DS})^2\right]$$

$$= \left[15 - 6I_{DS} - 25 - 4I_{DS}^2 + 20I_{DS}\right]$$

$$4I_{DS}^2 - \left(14 - \frac{1}{1.5}\right)I_{DS} + 10 = 0$$

$$4I_{DS}^2 - 13.33I_{DS} + 10 = 0$$

$I_{DS} = 2.19\,mA$ ✓

$I_{DS} = 1.140\,mA$

$V_{DS} = 5 - 2(2.19)$

$= 0.62$

~~$V_{DS} \Rightarrow$~~

$V_{GS} - V_{th} > V_{DS} \rightarrow$ Triode region

$2 - 0.5 > 0.62$

Q)

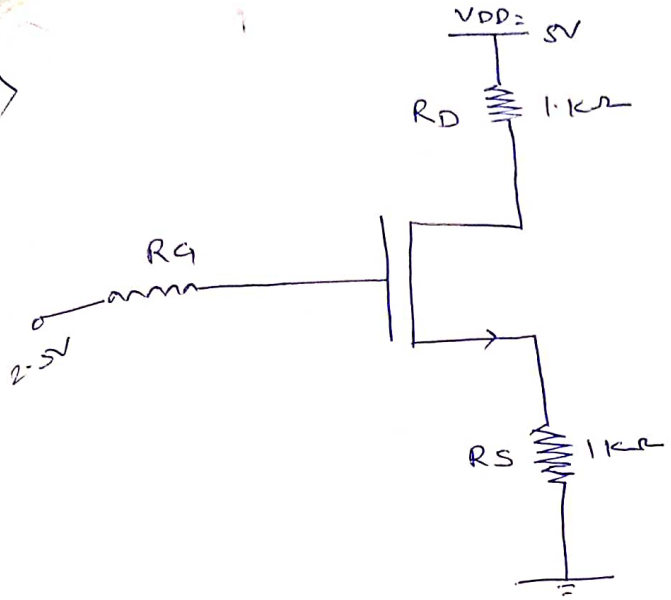

a) $V_{th} = 1.5V$, $K_n = 0.5\ mA/V^2$

I_{DS} ____ mA (upto two decimal)

Sol^n:- Mosfet is ON
~~saturation~~

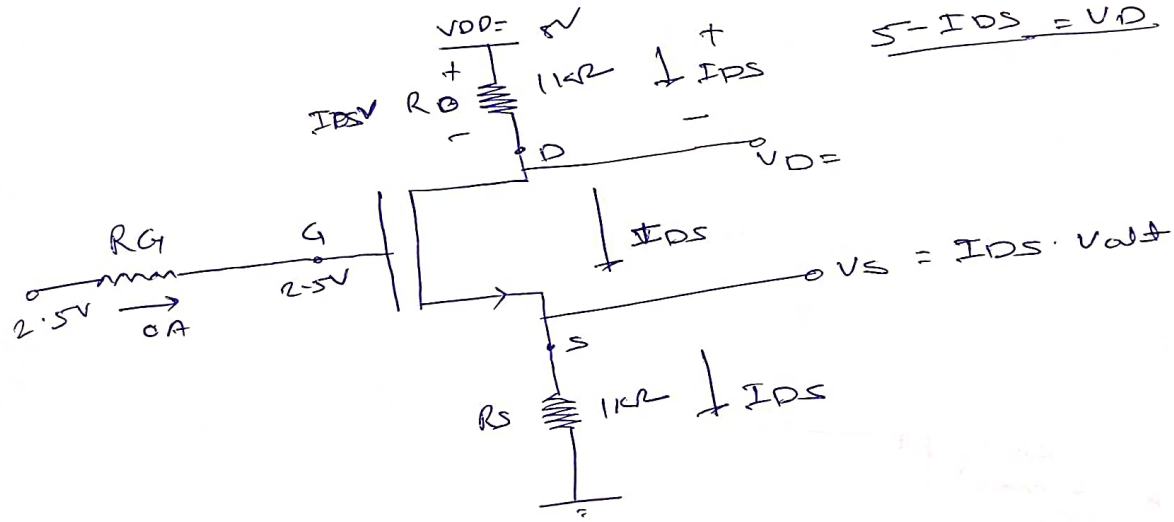

$5 - I_{DS} = V_D$

$$I_{DS} = K_n [V_{GS} - V_{th}]^2$$

$V_{GS} = ?$

$V_G = 2.5V$

$V_{GS} = (2.5 - I_{DS})$

$$I_{DS} = K_n\left[V_{GS} - V_{th}\right]^2$$

$$= 0.5\left[2.5 - I_{DS} - 1.5\right]^2$$

$$I_{DS} = 0.5\left[1 - I_{DS}\right]^2$$

$$2I_{DS} = 1 + I_{DS}^2 - 2I_{DS}$$

$$I_{DS}^2 - 4I_{DS} + 1 = 0$$

$$I_{DS} = 3.73\ mA$$

$$I_{DS} = 0.267\ mA \checkmark \approx 0.27$$

$$V_{GS} = 2.5 - I_{DS}$$

$$= 2.5 - 0.27$$

$$V_{GS} = 2.23V$$

$$V_{DS} = 5 - 2I_{DS} = 5 - 2\times(2.27)$$

$$\boxed{V_{DS} = 4.46V}$$

b)

$V_{th} = 0.5V$

$K_n = 4mA/V^2$

$R_D = 3k\Omega$

$I_{DS} =$ ____ mA

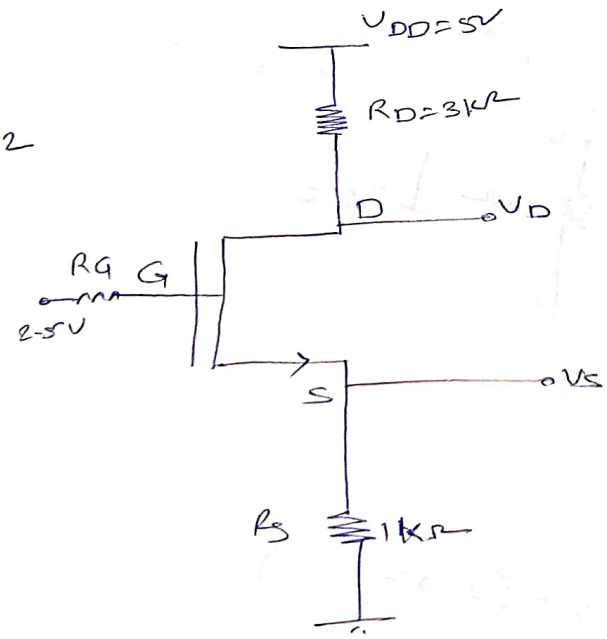

Sol:- Step ①
Mosfet is active & in saturation region

Step ②
saturation region

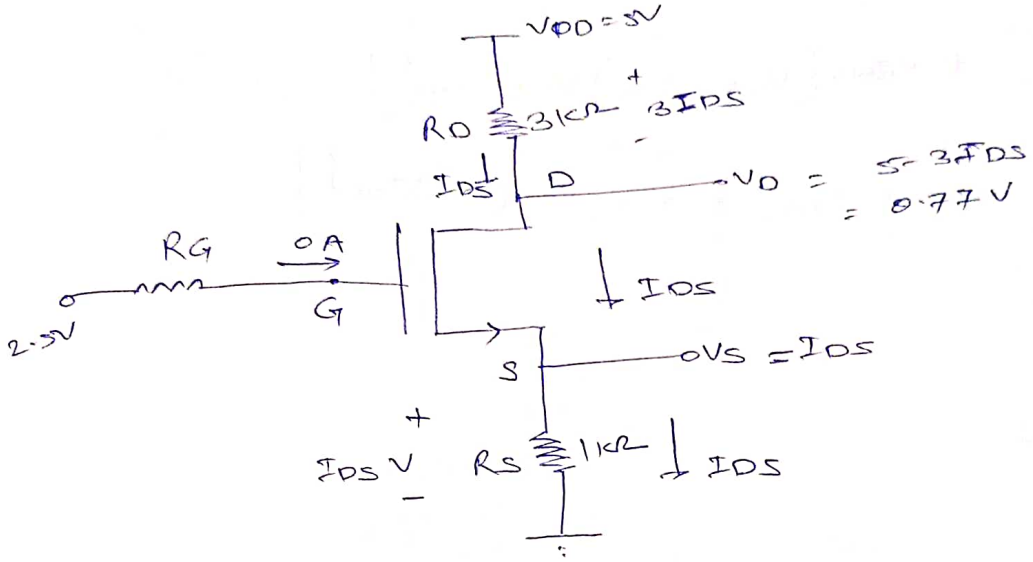

$V_{th} = 0.5$

$I_{DS} = K_n [V_{GS} - V_{th}]^2$

$V_G = 2.5V$

$V_{GS} = (2.5 - I_{DS})$

$I_{DS} = 4 [2.5 - I_{DS} - 0.5]^2$

$I_{DS} = 4 [2 - I_{DS}]^2$

$0.25 I_{DS} = 4 + I_{DS}^2 - 4 I_{DS}$

$I_{DS}^2 - 4.25 I_D + 4 = 0$

$I_{DS} = 1.406 mA$ ✗ , $I_{DS} = 2.84 mA$ ✗

$V_{GS} = 1.09V$

$V_S = I_{DS} = 1.41V$

$V_D = 5 - 3 \times 1.41$
$= 0.77V$

Therefore

mosfet is in Triode region

$I_{DS} = \underline{\underline{1.20\,mA}}$.

$$I_{DS} = K_n\left[2(V_{GS} - V_{th})V_{DS} - V_{DS}^2\right]$$

$$I_{DS} = 4\left[2(2.5 - I_{DS})\,5 - 3I_{DS} - (5 - 3I_{DS})^2\right]$$

$V_{DS} =$

$$\frac{I_{DS}}{4} = \left[2\right.$$

$I_{DS} = 1.20\,mA$.

Q) very important

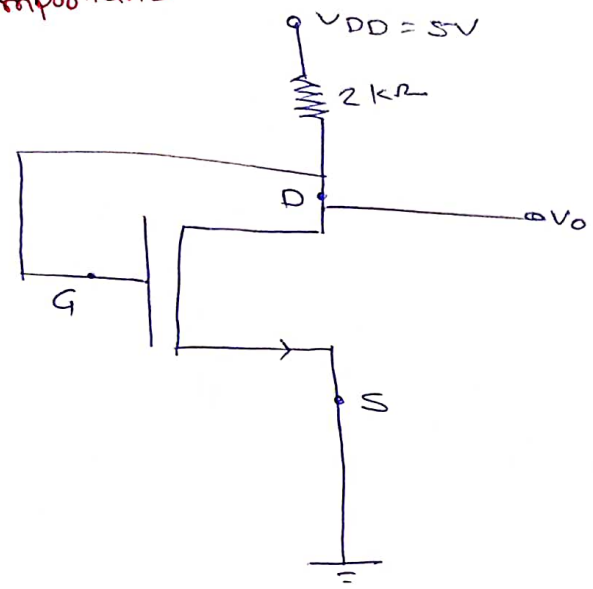

$V_{th} = 2V$, $k_n = 0.5 mA/V^2$

I_{DS} = _____ mA

V_o = _____ Volt.

Sol^n:-

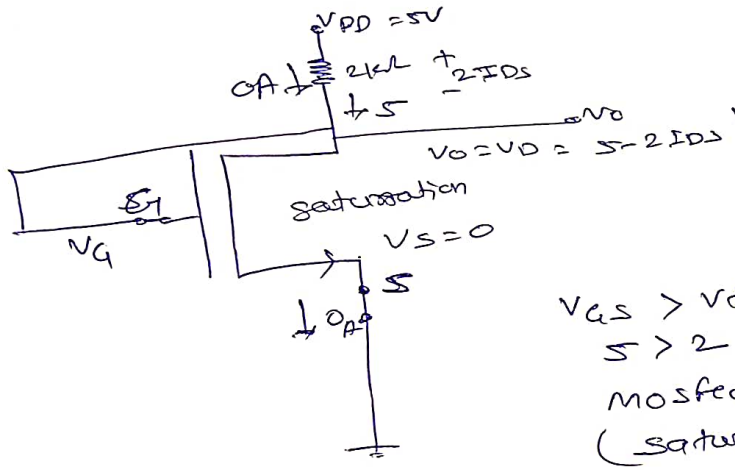

$V_{GS} > V_{th}$

$5 > 2$.

mosfet is ON

(saturation region)

$\boxed{V_{DS} > V_{GS} - V_{th}}$ sat.

$V_{DS} < V_{GS} - V_{th}$

$V_{DS} - V_{GS} \gtrless -V_{th}$
$-V_{th}$

$(V_D - V_S) - (V_G - V_S)$

$V_D - V_G \gtrless -V_{th}$
$-V_{th}$

$I_{DS} = k_n [V_{GS} - V_{th}]^2$

$V_D = V_G = 5 - 2I_{DS}$

$I_{DS} = 0.5 [5 - 2I_{DS} - 2]^2$

$2I_{DS} = [3 - I_{DS}]^2$

$4I_{DS}^2 - 14I_{DS} + 9 = 0$

$I_{DS} = 0.85\,mA$ ✓, $I_{DS} = 2.65\,mA$ ✗

$V_G = 5 - 2I_{DS}$

$= 5 - 2 \times (0.85)$

$\boxed{V_G = 3.3 = V_o = V_D}$

$V_G > V_{th}$

$3.3 > 2.$

$I_{DS} = 0.85$

$V_o = 3.30\,V$

Q)

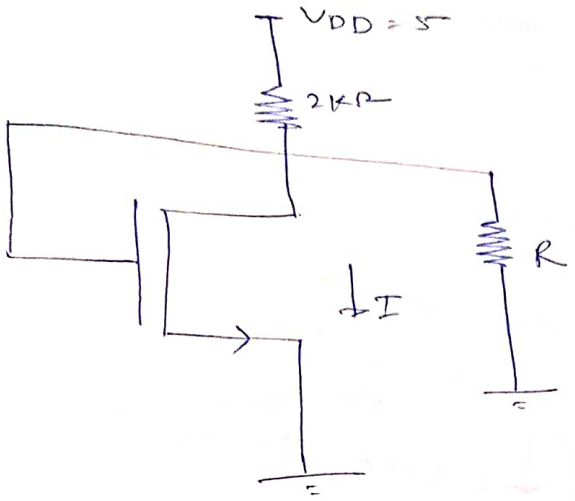

$K_n = 0.5\,mA/V^2$

$= \frac{\mu_n C_{ox} W}{2L}$

$V_{th} = 2$ volt

a) $R = 2K\Omega$

$I =$ ____ mA

b) $R = 1K\Omega$

$I =$ ____ mA.

Sol^n :-

a) Mosfet ON

$I = 0.09\,mA$

b) Mosfet off

$I = 0$

Q)

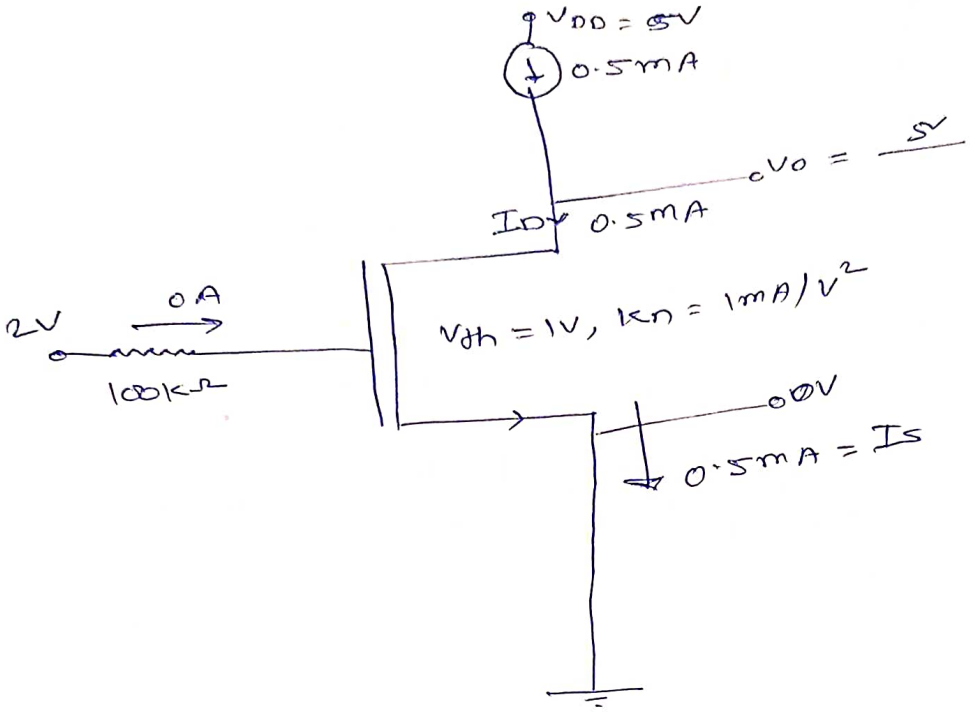

Soln:-

Mosfet is ON
saturation

$V_{DS} > V_{GS} - V_{th}$

$\cancel{I_{DS} = k_n [V_{GS} - V_{th}]^2}$

$\cancel{= 1[5-1]^2}$

$\boxed{\cancel{I_{DS} = 16\,mA}}$

$\boxed{I_{DS} = 0.5\,mA}$

$V_G = 2$
$V_S = 0$

$V_{GS} = 2V$
$V_{DS} = V_o$

$I_{DS} = k_n [V_{GS} - V_{th}]^2$

$I_{DS} = 1 [2-1]^2 = 1\,mA$

triode

$$I_{DS} = K_n \left[2(V_{GS} - V_{th}) V_{DS} - V_{DS}^2 \right]$$

$$0.5 = 1 \left[2(2-1) V_o - V_o^2 \right]$$

$$V_o^2 - 2V_o + 0.5 = 0$$

$$V_o = 1.17V, \quad 0.29$$

Q)

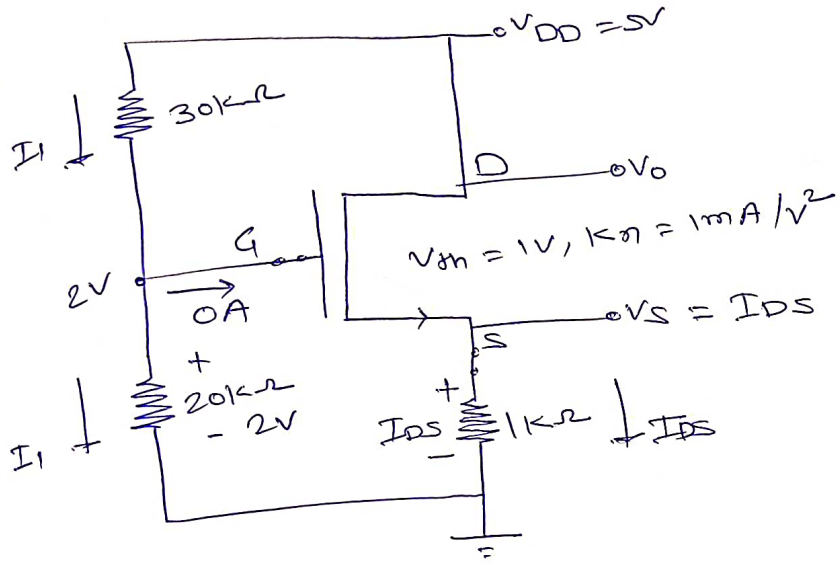

Sol^n:-

$$\frac{5}{30+20} = \frac{5}{50} = 0.1\,mA.$$

$V_G = 2V$

$V_S = 0V$

$V_{GS} = 2V > V_{th}$

MOSFET is in on condition.

$V_D = 5V$
$V_G = 2V$

$V_D - V_G \qquad -V_{th}$

$3V \quad > \quad -1$

saturation

$I_{DS} = K_n [V_{GS} - V_{th}]^2$

$I_{DS} = 1 [2 - I_{DS} - 1]^2$

$I_{DS} = (1 - I_{DS})^2$

$I_{DS} =$ 2.61 mA, 0.38 mA. ✓

$V_{DS} = V_D - V_S$

$= 5 - I_{DS}$

Q)

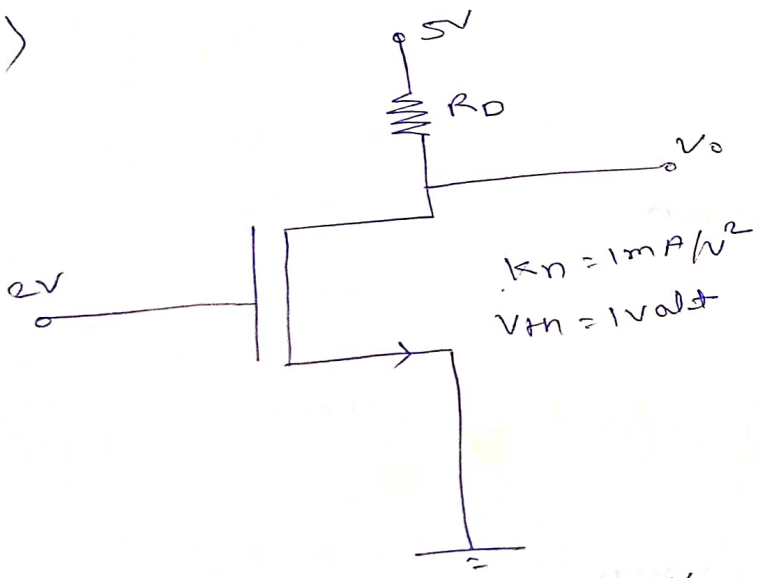

a) for the value of Vo to be 2V

RD ____ kΩ

b) for the value of Vo to be 0.5V

RD ____ kΩ

Sol^n :-

a)

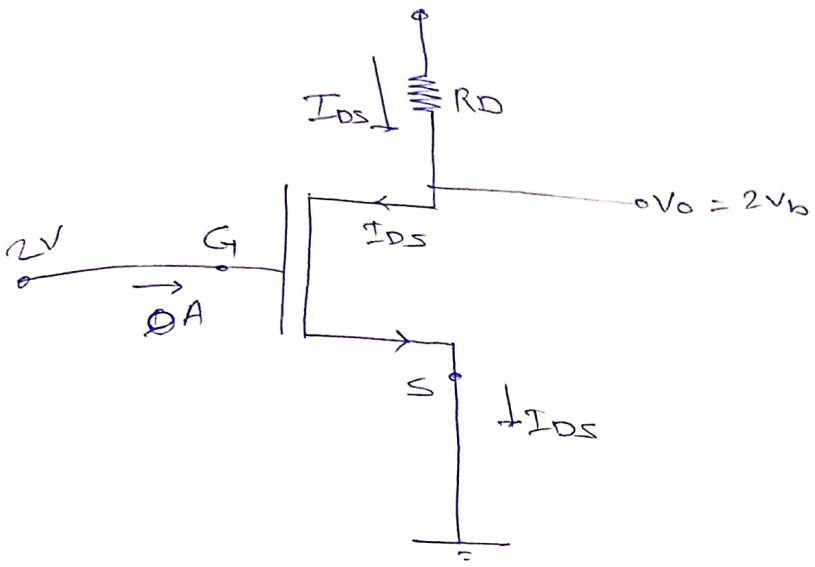

$V_D = V_o = 2V$

$V_G = 2V$

$V_S = 0V$

$V_D - V_G > -1V$

$0 > -1$ (saturation)

$I_{DS} = K_n [V_{GS} - V_{th}]^2$

$I_{DS} = 1 [2-1]^2 = 1mA$

$I_{DS} = \frac{5-2}{R_D}$

$\boxed{R_D = 3k\Omega}$

b) $V_o = 0.5V$

$V_G = 2V$

$V_S = 0V$

$V_{GS} = 2V$

$V_D = V_o = 0.5V$

$V_D - V_G \qquad - V_{th}$

$0.5 - 2 \qquad -1$

$-1.5 < -1$

It is in Triode region

$$I_{DS} = K_n \left[2(V_{GS} - V_{th}) V_{DS} - V_{DS}^2 \right]$$

$$= 1 \left[2(2-1) \times 0.5 - (0.5)^2 \right]$$

$I_{DS} = 0.75 mA$

$$I_{DS} = \frac{5 - 0.5}{R_D}$$

$$0.75 = \frac{5 - 0.5}{R_D}$$

$$\boxed{R_D = 6 k\Omega}$$

Two MOSFET

Q)

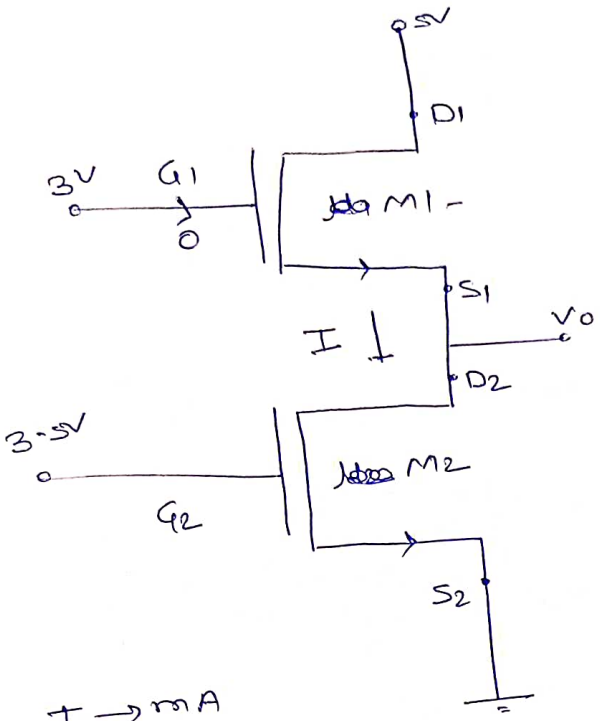

$I \rightarrow mA$

$V_o \rightarrow$ volt

$M1 :- \; K_n = \frac{\mu_n C_{ox} W}{2L} = 1 mA/V^2$

$V_{th} = 1V$

$M2 :- \; K_n = 1 mA/V^2$

$V_{th} = 1V$

which of the following is true

a) M1 - triode, M2 - triode

b) M1 - saturation, M2 - triode

c) M1 - triode, M2 - saturation

d) M1 - saturation, M2 → saturation

$V_{D1} = 5V$

$V_{G1} = 3V$

$V_{D1} - V_{G1} > V_{th}$

$2 > -1$

M_1 is in saturation region

$V_{D2} = V_{S1}$

$(V_{GS})_1 > V_{th}$

$3 - V_{S1} > 1$

$V_{S1} < 2$

$\boxed{V_{D2} < 2}$

$(V_{DS})_2 = V_{D2} - V_{S2}$

$= V_{D2}$

$(V_{DS})_2 < 2$

$(V_{GS} - V_{th}) < 2.5\ V$

$M_2 \longrightarrow$ triode

M_1 - saturation $\qquad$ M_2 - triode

saturation current of M_1 = triode current I_2

$$\cancel{k_n}\left[(V_{GS} - V_{th})^2 M_1\right] = \cancel{k_n}\left[2(V_{GS} - V_{th})V_{DS} - V_{DS}^2\right]_{M2}$$

$$\left[(3 - V_o - 1)\right]^2 = \left[2(3.5 - 1)V_o - V_o^2\right]$$

$$4 + V_o^2 - 4V_o = 5V_o - V_o^2$$

$$2V_o^2 - 9V_o + 4 = 0$$

$V_o = 4V,\ 0.5V$ ✓

Q)

Important

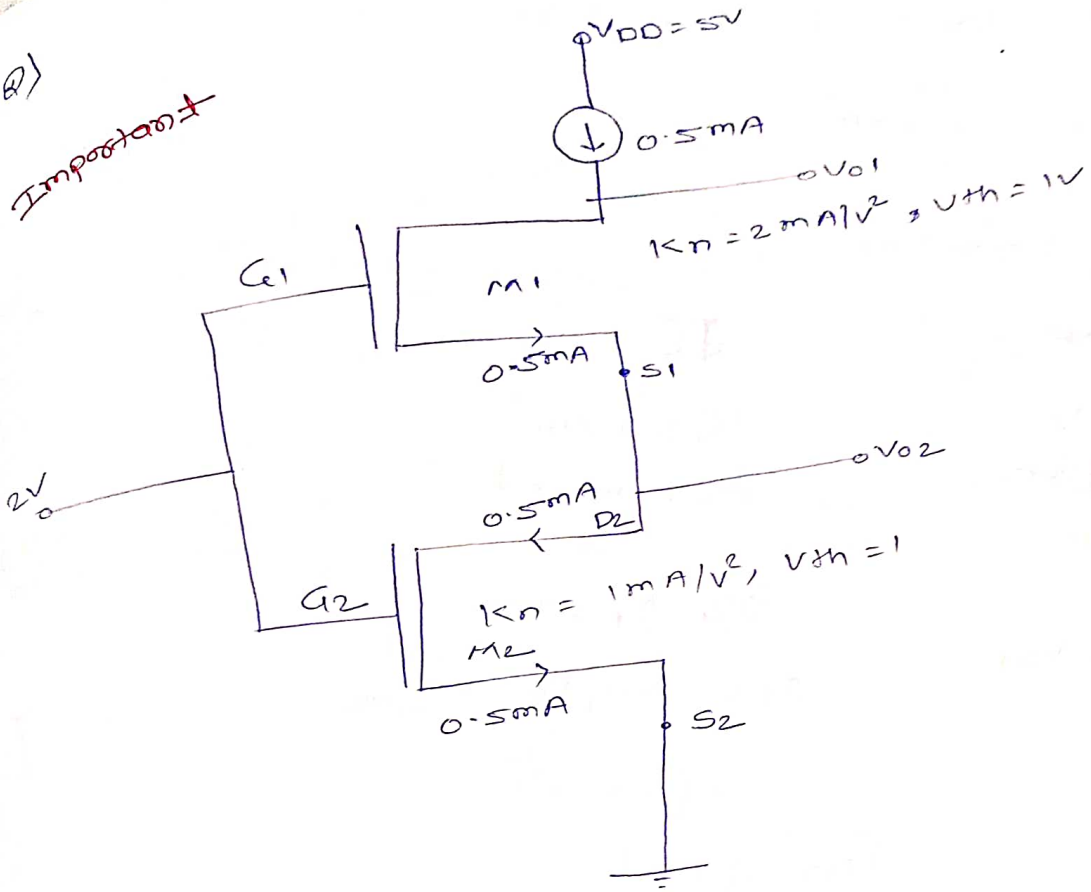

a) M1 satⁿ, M2 triode

b) M1 triode, M2 - triode

c) M1 triode, M2 satⁿ

d) M1 satⁿ, M2 satⁿ.

Solⁿ:-

$$I_{DS} = K_n[V_{GS} - V_{th}]^2 \quad M_2$$

$M_1 \longrightarrow$ saturation - assume

$M_2 \longrightarrow$ triode - fix.

saturation M_1 = ~~An~~ triode current M_2

$K_n[V_{GS}-V_{th}]_{M1} = 0.5mA$

$2[(2-V_2-1)]^2 = 0.5$

$(1-V_2)^2 = \frac{1}{4}$

$1-V_2 = \pm 1/2$

$1-V_2 = +\frac{1}{2}$ ✓

$V_{GS}-V_{th} \rightarrow +ve$

$V_2 = 0.5V = V_{S1}$

$\sqrt{\frac{1}{4}} = 1/2$

$V_{GS} > V_{th}$

$(V_{GS}-V_{th}) > 0)$

$(V_{GS})_1 = 1.5V$

$I_{DS} = K_n[V_{GS}-V_{th}]^2_{M2}$

$= 2[1.5-1]^2$

$\boxed{I_{DS} = \frac{1}{2}mA}$

$0.5mA = 1[2(2-1)V_2 - V_2^2]$

$\boxed{V_2 = 0.29 \text{ volt}}$

$I_{DS} = K_n[V_{GS}-V_{th})^2_{M1}$

$= 2(1.71-1)^2 \neq 0.5mA$

b) M_1 - triode, M_2 - triode

Q)

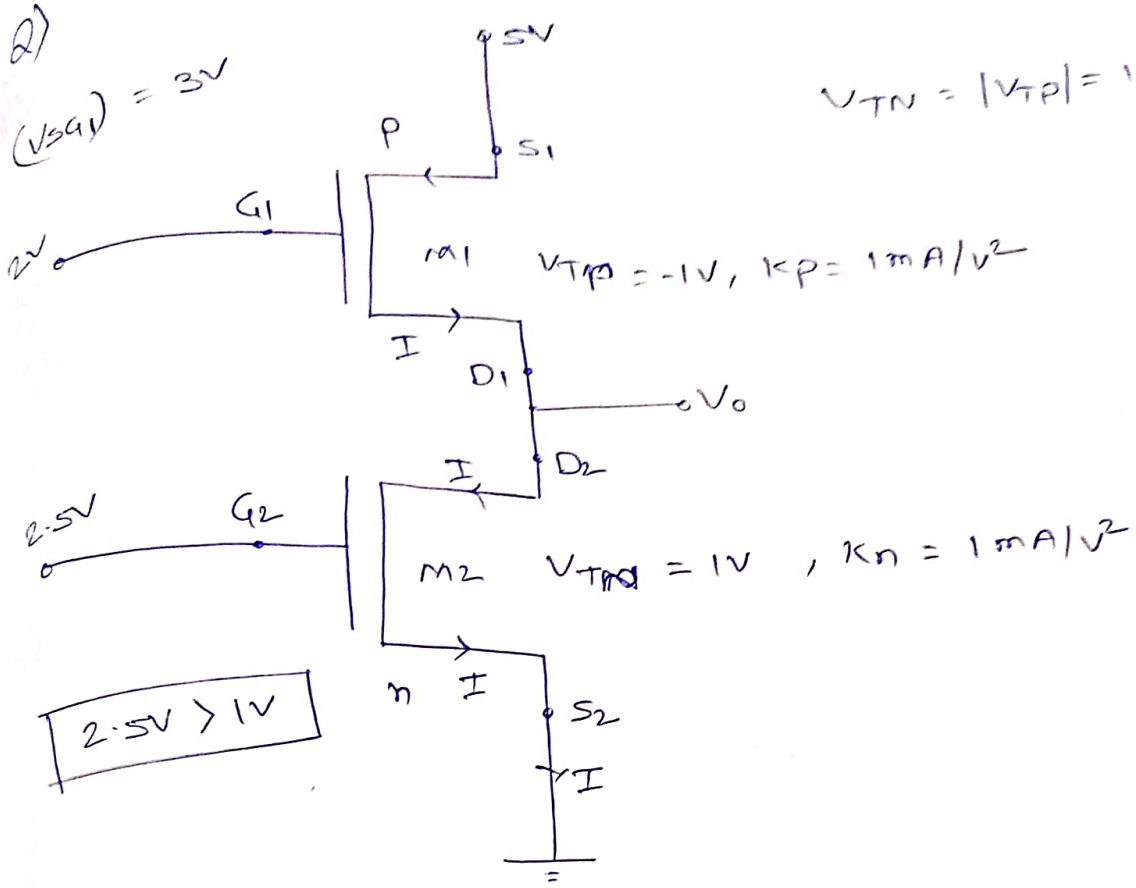

$V_{TN} = |V_{TP}| = 1V$

a) M_1 triode, M_2 saturation

b) M_1 saturation, M_2 saturation

c) M_1 saturation, M_2 - triode

d) M_1 triode, M_2 - triode

Sol:- assume

M_1 - sat^n, $M_2 \rightarrow$ sat^n

sat^n current of M_1 = sat^n current of M_2

$$K_P[3-1]^2 = K_n[2.5-1]^2$$

$$1[3-1]^2 \neq 1[2.5-1]^2$$

assumsion is wrong

$(V_{SG} - |V_{TP}|) = 2V$ — triode

$(V_{GS} - V_{TN}) = 1.5V$ — saturation

a) M_1 triode, M_2 saturation

triode current of M_1 = satu^n current of M_2

$$K_p\left[2(3-1)(5-V_o) - (5-V_o)^2\right] = K_n\left[2.5-1\right]^2$$

$$20 - 4V_o - 25 - V_o^2 + 10V_o = 2.25$$

$V_o = 1.677V$, $V_o = 4.32$ volt

Q)

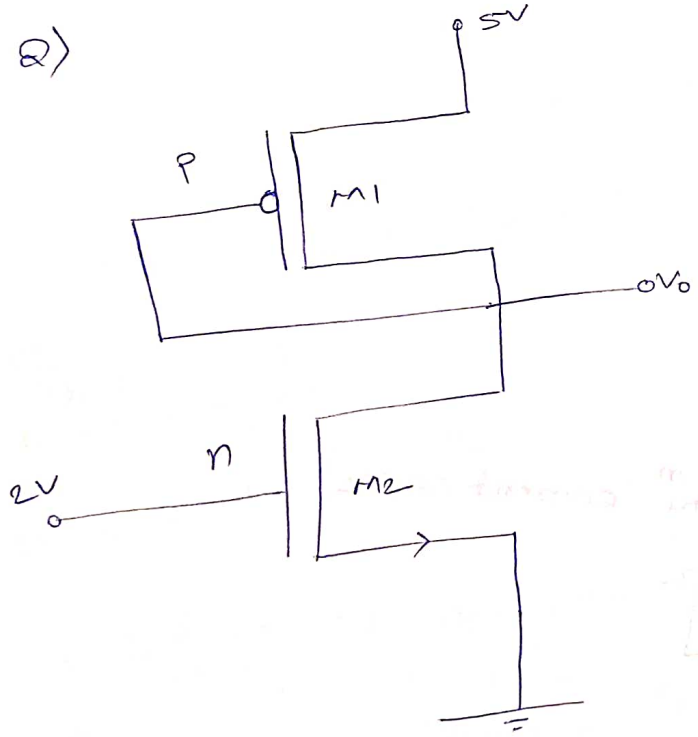

i) which of following is correct

a) M_1 triode, M_2 satu^n

b) M_1 triode, M_2 triode

c) M_1 satu^n, M_2 satu^n

d) M_1 sat^n, M_2 triode

ii) V_o _____ volts upto two decimal.

sol:-

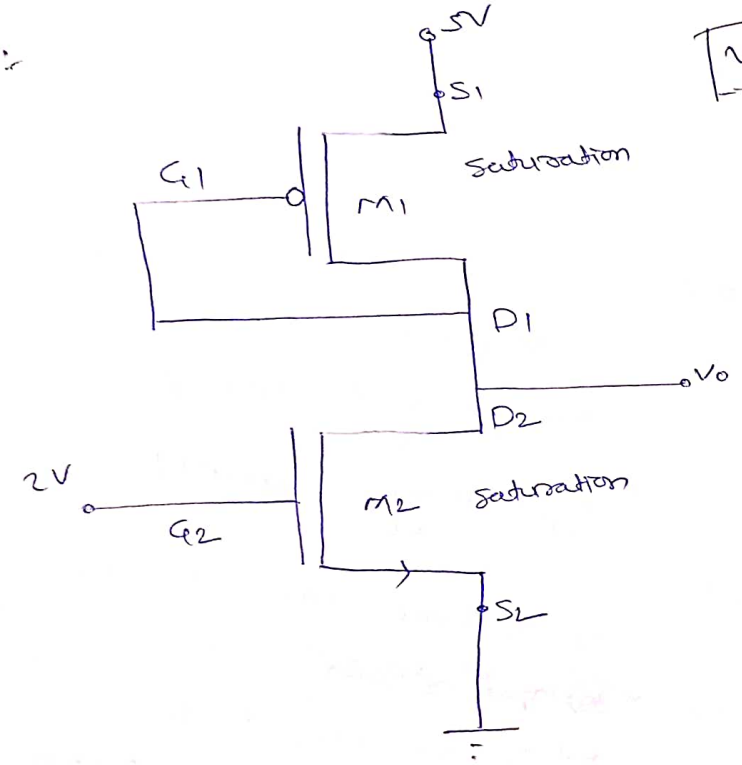

$\boxed{V_o = 3V}$

$V_{D2} = V_{D1}$

V_{SD} $\qquad$ $V_{SG} - |V_{TP}|$

$V_{SD} - V_{SG}$ $\qquad$ $-|V_{TP}|$

$(V_S - V_D) - (V_S - V_G)$ $\qquad$ $-|V_{TP}|$

$V_G - V_D > -|V_{TP}|$ $\qquad$ M_1 is in saturation

$0 > -1$

M_2 - saturation → assume

saturation current of M_1 = saturation current of M_2

$$K_p\left[(5-V_o)-1\right]^2 = K_n\left[2-1\right]^2$$

$$(4-V_o)^2 = 1$$

$$4-V_o = \pm 1$$

$$4-V_o = 1$$

$$\boxed{V_o = 3V}$$

$$V_{SG} > |V_{TP}|$$

Q)

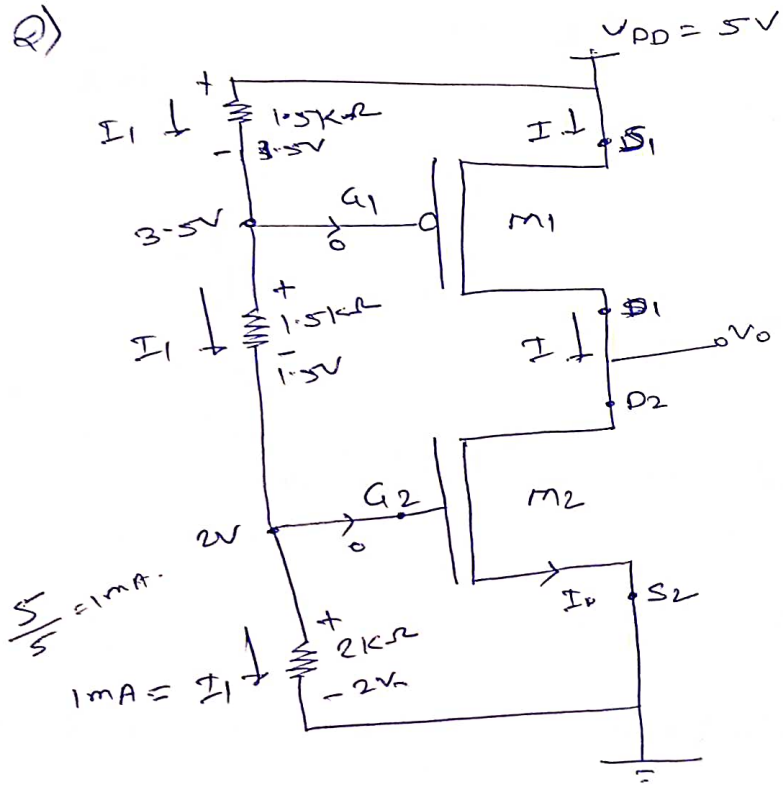

$$V_{TN} = |V_{TP}| = 1V$$

$$K_n = \frac{\mu_n C_{ox} W}{2L} = 1mA/V^2$$

$$K_p = \frac{\mu_o C_{ox} W}{2L} = 0.5mA/V^2$$

a) M_1 triode, M_2 - saturation

✓ b) M_1 sat^n, M_2 triode

c) M_1 triode, M_2 - triode

d) M_1 saturation, M_2 - saturation

$(V_{GS})_{M2} = 2V$

$(V_{SG})_{M1} = 1.5V$

Assume

M_1 saturation & M_2 saturation

saturation of M_1 = saturation of M_2 (wrong)

$$K_p[1.5-1]^2 = K_n[2-1]^2$$

$$0.5[0.5]^2 \neq 1[1]^2$$

$(V_{GS} - V_{TN}) = 1V$ — triode

$V_{SG} - |V_{TP}| = 0.5V$ — saturation

saturation current of M_1 = triode current of M_2

$$K_p[1.5-1]^2 = K_n[2(2-1)V_o - V_o^2]$$

$$1/8 = 2V_o - V_o^2$$

$$\boxed{V_o^2 - 2V_o + \frac{1}{8} = 0}$$

$V_o = 1.935, 0.06$ ✓

$$(V_{DS})_{M2} = V_o - 0$$
$$= V_o$$
$$= 0.06$$

Q)

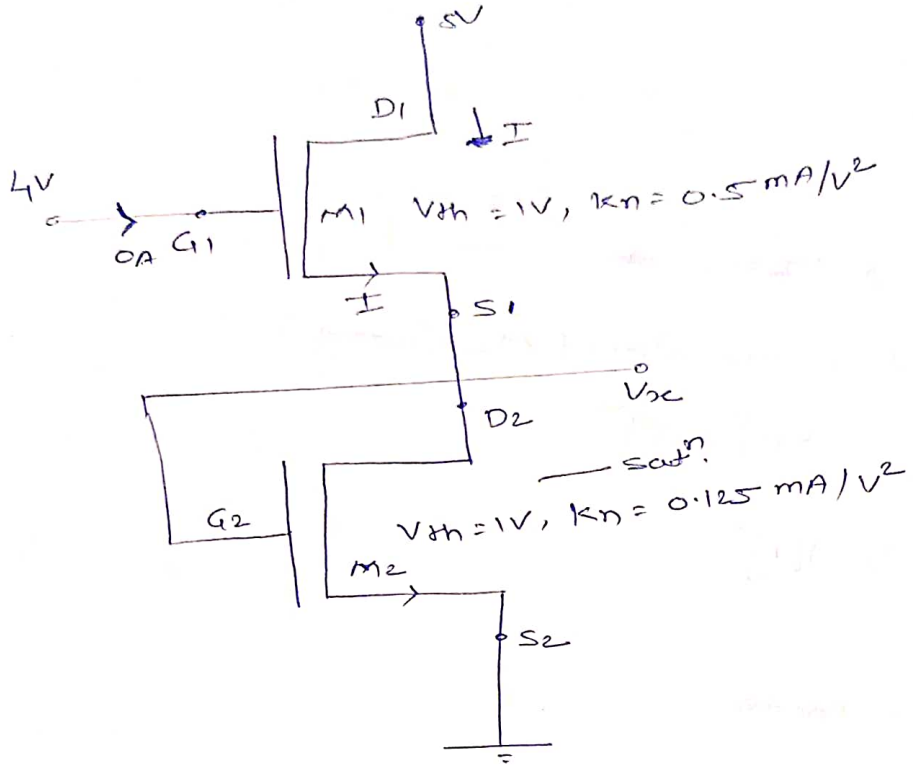

value Vx is

a) 2.33V b) 5V c) 6.157V d) 1V

Sol^n:- $V_{D1} = 5V$

$V_{G1} = 4V$

saturation M1 = saturation M2

$$k_{n1}\left[(4 - V_x) - 1\right]^2 = k_{n2}\left[(V_x - 0) - 1\right]^2$$

$$0.5\left[3 - V_x\right]^2 = \frac{1}{8}\left[V_x - 1\right]^2$$

$$(3 - V_x)^2 = \frac{1}{4}(V_x - 1)^2$$

$$3 - V_x = \pm \frac{1}{2}(V_x - 1)$$

$$3 - V_x = \frac{1}{2}(V_x - 1)$$

$$6 - 2V_x = V_x - 1$$

$3V_x = 7$

$V_x = \frac{7}{3}$

$\boxed{V_x = 2.33 \text{ Volt}}$

AC Analysis :-

i) MOSFET is use as an amplifier in saturation region

$$I_{DS} = K_n \left[V_{GS} - V_{th} \right]^2$$

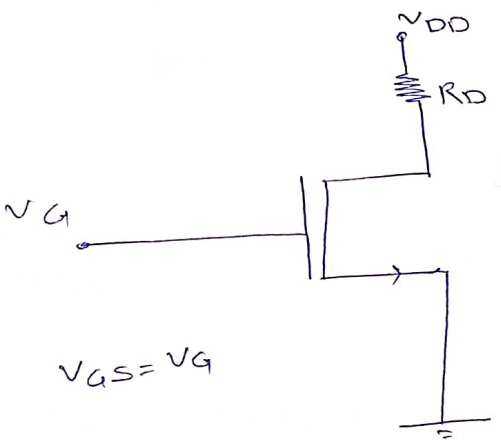

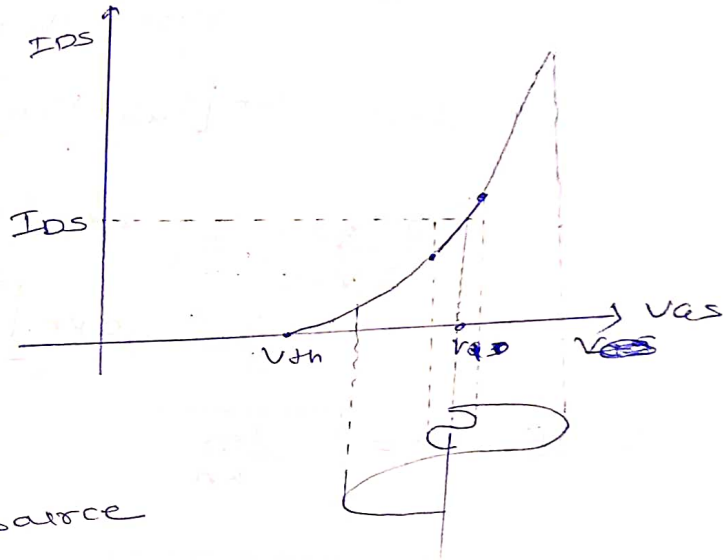

ii) Voltage controlled current source

iii) Equivalent AC model is valid only for small AC signal (for linear characteristics)

e.g:-

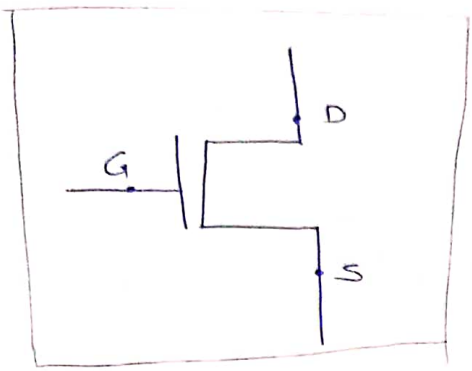

=

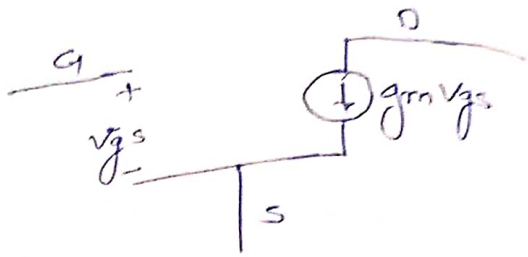

$$g_m = \left.\frac{\partial I_{DS}}{\partial V_{GS}}\right|_{V_{DS}}$$

$$I_{DS} = K_n\left[V_{GS} - V_{th}\right]^2$$

$$\frac{\partial I_{DS}}{\partial V_{GS}} = 2K_n\left[V_{GS} - V_{th}\right]$$

$$g_m = 2K_n\sqrt{\frac{I_{DS}}{K_n}}$$

$$\because V_{GS} - V_{th} = \sqrt{\frac{I_{DS}}{K_n}}$$

$$\boxed{g_m = 2\sqrt{K_n \cdot I_{DS}}}$$

DC model :- i) All the capacitors are replaced by open circuit
ii) All the AC sources are replaced by their internal resistances.

AC model :- i) replace all the capacitors by S.C.
ii) All the DC sources are replaced by their internal resistances.

Q)

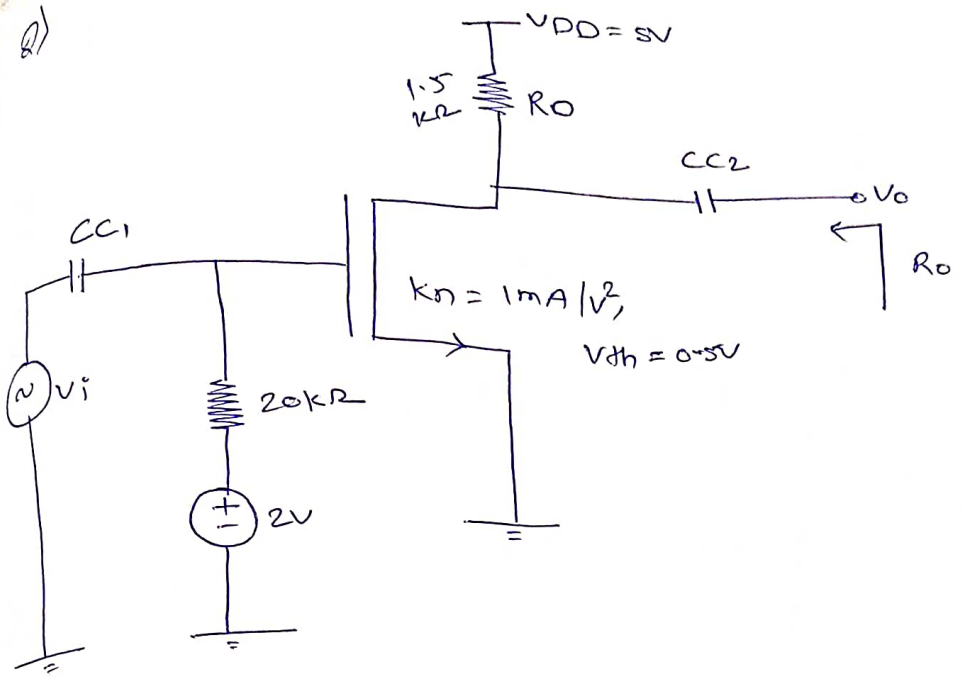

$\frac{V_o}{V_i} = _____$

Sol:-

$I_{DS} = 2.25\,mA$, $g_m = 2\sqrt{K_n I_{DS}} = 2\sqrt{1 \times 2.25}$

$= 3\,mA/V$

DC Analysis

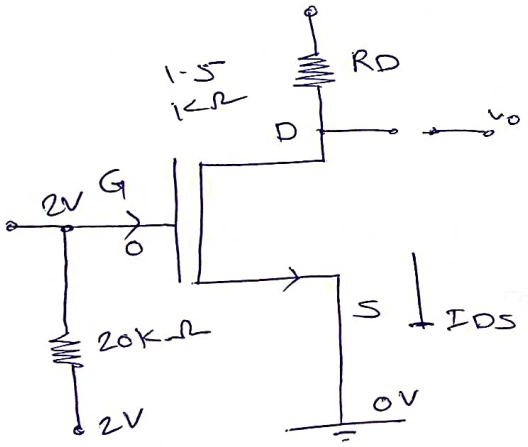

$I_{DS} = K_n [V_{GS} - V_{th}]^2$

$= 1 [2 - 0.5]^2$

$I_{DS} = 2.25\,mA$

AC model

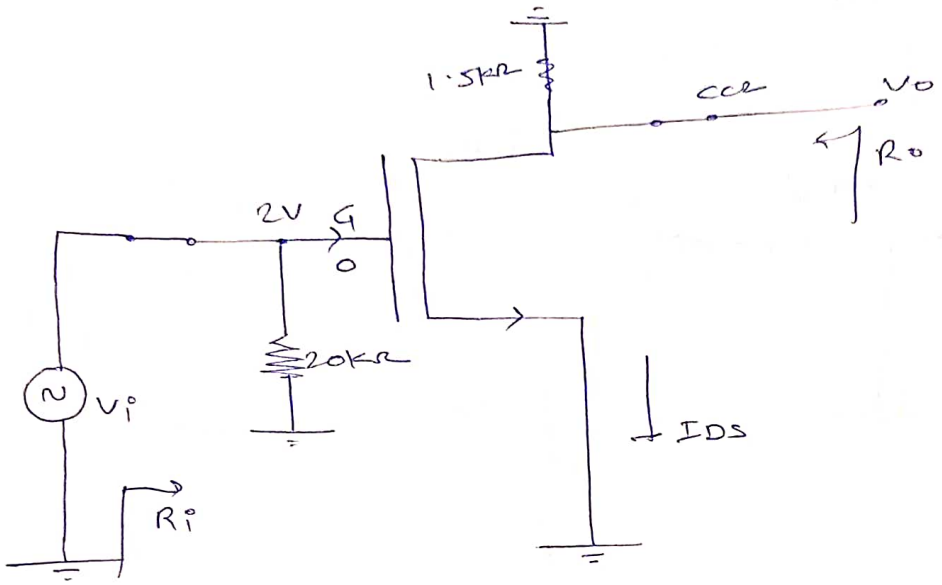

π model

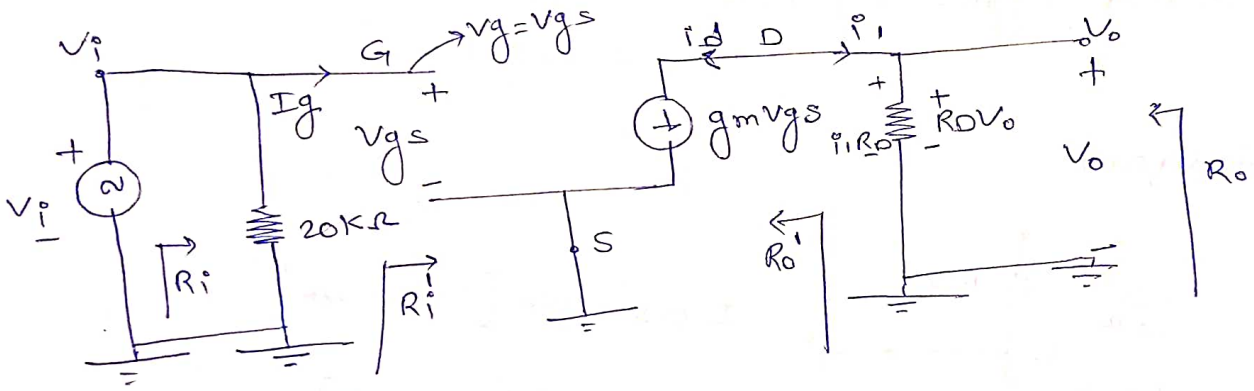

$$R_i' = \frac{V_g}{i_g} = \frac{V_g}{0} \Rightarrow \infty$$

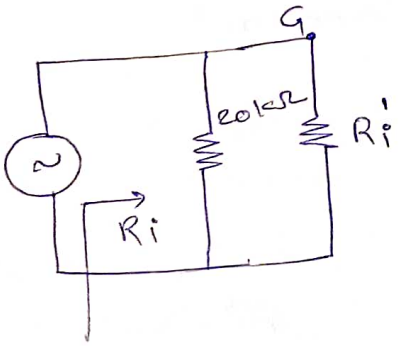

$$R_i = 20k\Omega \,||\, R_i'$$

$$\boxed{R_i = 20k\Omega}$$

$V_o = i_1 R_D = -i_d R_D$

$= -g_m V_{gs} \cdot R_D$

$$\boxed{A_v' = \frac{V_o}{V_{gs}} = -g_m R_D}$$

$$A_v = \frac{V_o}{V_i} = \frac{V_o}{V_{gs}} \cdot \frac{V_{gs}}{V_i} = A_v' \times \frac{V_{gs}}{V_i} = A_v'$$

$V_i = V_g = V_{gs} \rightarrow$ $= -g_m R_D \times 1$

$= -3 \times 1.5$

$= -4.5$

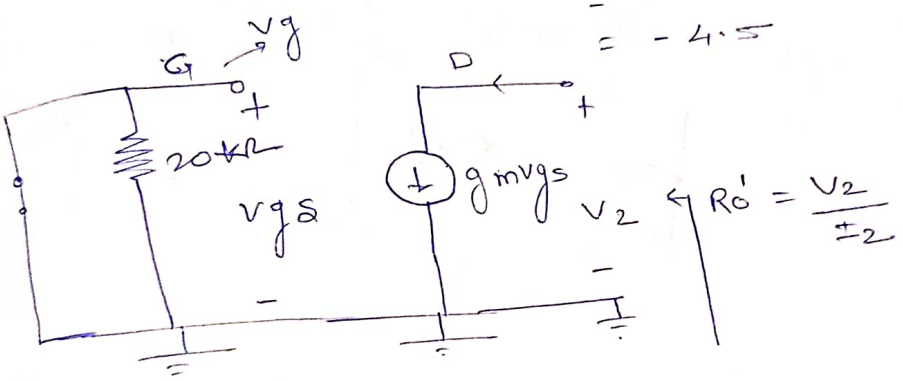

$V_{gs} = 0$

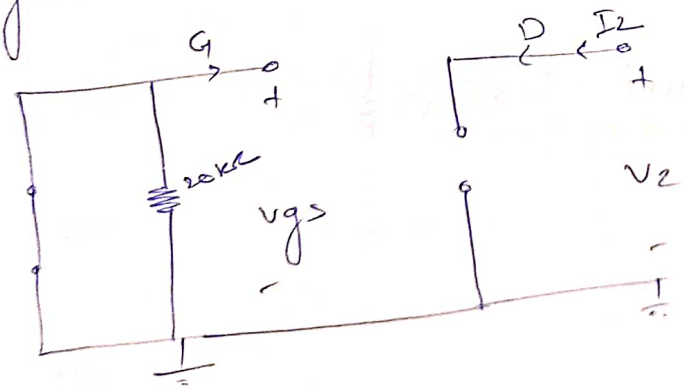

$R_o' = \frac{V_2}{I_2} = \frac{V_2}{0} = \infty$

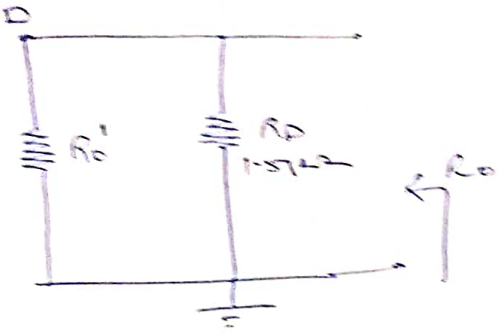

$R_o = R_o' \parallel R_D$

$= R_D = 1.5k\Omega$

Q)

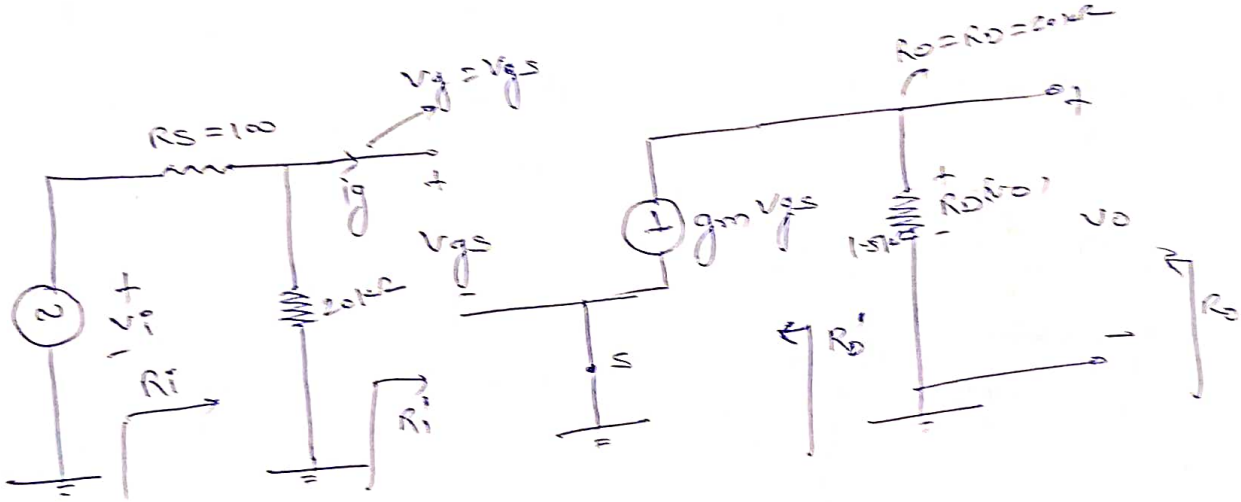

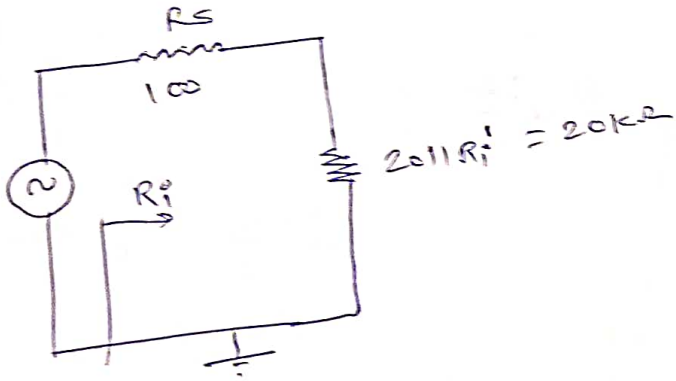

$R_i = 20 \parallel k\Omega$

$V_o = i_1 R_D = -g_m V_{gs} \cdot R_D$

$$\boxed{\frac{V_o}{V_{gs}} = -g_m R_D} = A_v' =$$

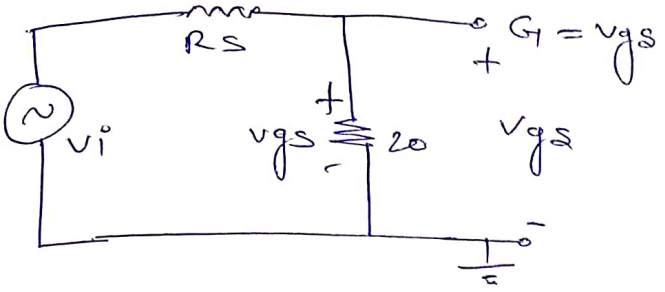

$$V_{gs} = \frac{20}{20+0.1} \times V_i$$

$$\frac{V_{gs}}{V_i} = \frac{20}{20.1}$$

$$\frac{V_o}{V_i} = \frac{V_o}{V_{gs}} \cdot \frac{V_{gs}}{V_i} = -g_m R_D \frac{20}{20.1}$$

Q)

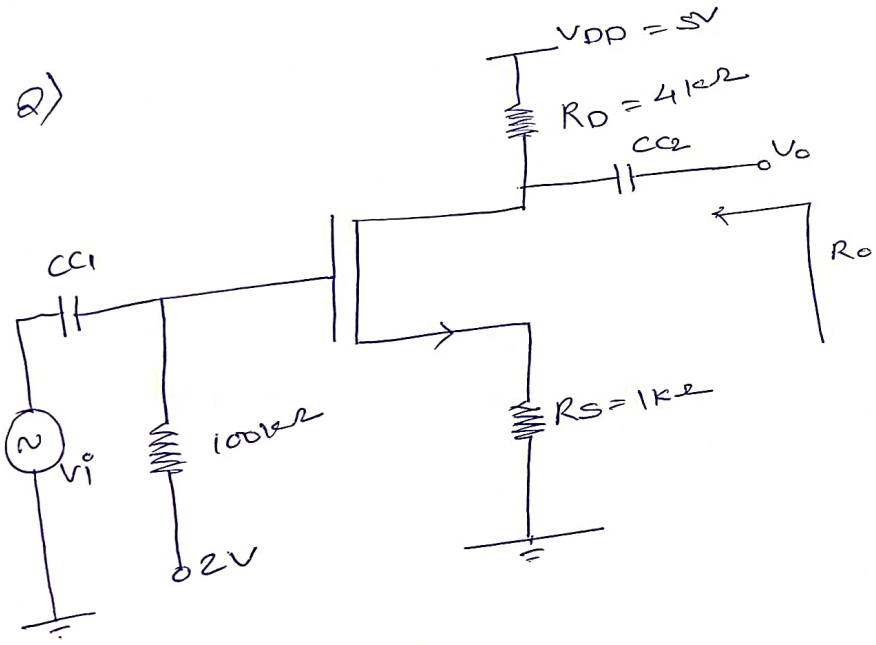

$V_{th} = 0.75V$

$K_n = 2mA/V^2$

Dc analysis

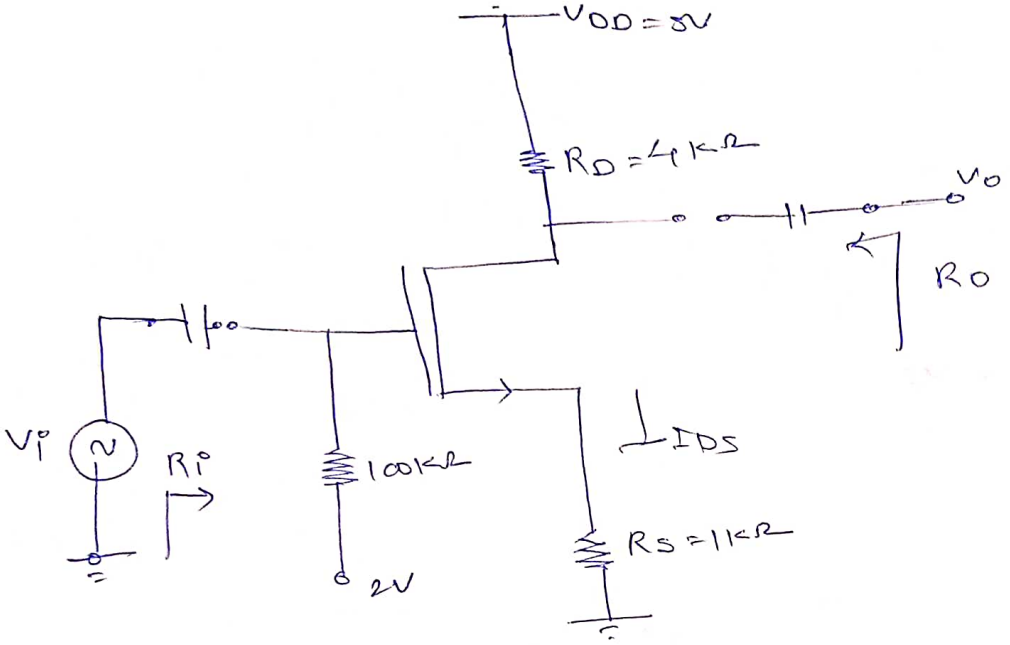

$I_{DS} = 0.67\ mA$

$g_m = 2.32\ mA/V$

Ac analysis

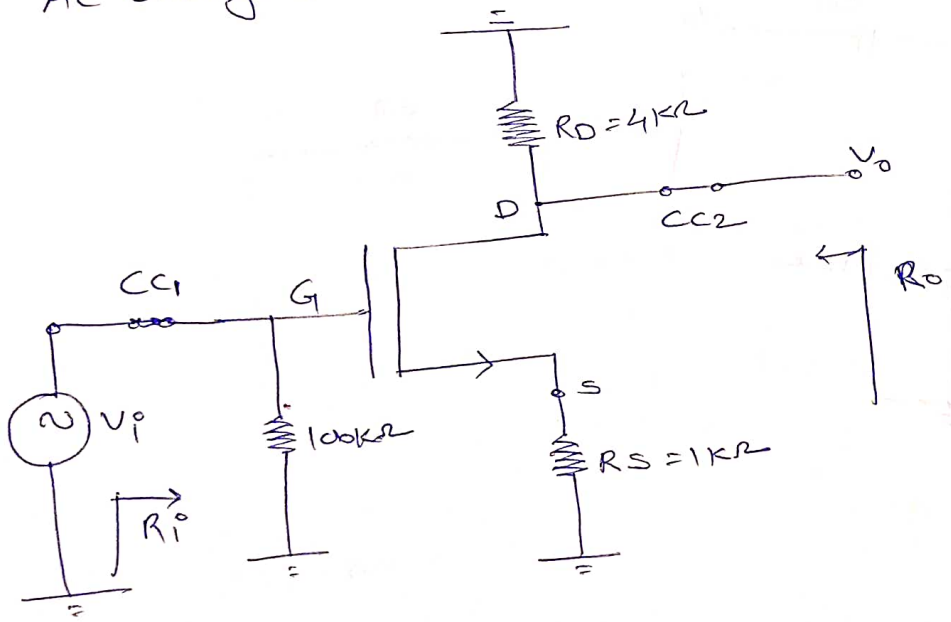

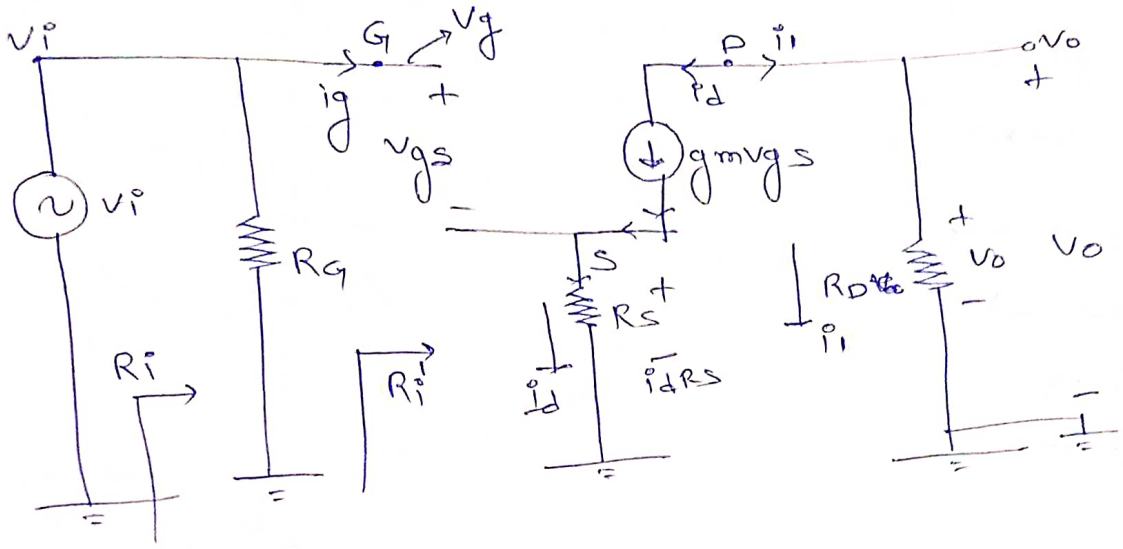

$$R_i' = \frac{v_g}{i_g} = \infty$$

$$v_d = V_o = i_1 R_D = -i_d R_D$$

$$v_d = v_o = -g_m v_{gs} R_D \quad \text{—} (1)$$

$$v_g - v_{gs} - i_d R_S = 0$$

$$v_g = v_{gs} + g_m v_{gs} R_S$$

$$v_g = (1 + g_m R_S) \cdot v_{gs}$$

$$\boxed{\frac{v_o}{v_g} = \frac{-g_m R_D}{1 + g_m R_S}}$$

$$\boxed{\frac{v_d}{v_g} = \frac{-g_m \left(\text{net resistance drain and ground}\right)}{1 + g_m \left(\text{net source \& ground}\right)}}$$

$\boxed{V_d = V_o}$ $\quad v_i = v_g$

$$\frac{V_o}{V_i} = \frac{-g_m R_D}{1 + g_m R_S}$$

$$= \frac{-2.32 \times 4}{1 + (-2.32) \times 1}$$

$$\frac{V_o}{V_i} = -2.79$$

$$\approx -2.80$$

e.g:- if

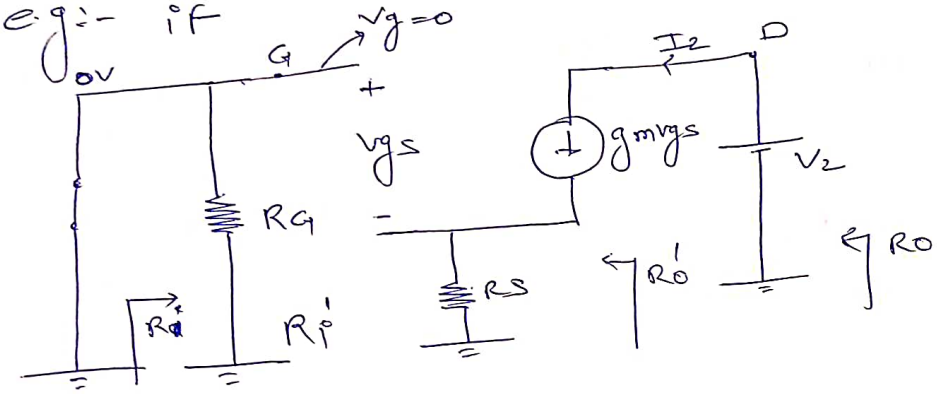

$$v_g = (1 + g_m R_S) v_{gs}$$

$$v_g - v_{gs} - i_d R_S = 0$$

$$v_g = v_{gs} + g_m v_{gs} R_S \qquad v_{gs} = 0$$

$$v_g = v_{gs}(1 + g_m R_S)$$

$$\cancel{\frac{V_o}{V_i}} = R_o' = \frac{V_2}{I_2}$$

$$= \frac{V_2}{0}$$

$$\boxed{R_o' = \infty}$$

$$R_o = R_D \parallel R_o'$$

$$= R_D = 4\,k\Omega$$

$$\frac{V_d}{V_{gs}} = \frac{-g_m R_D}{1+g_m R_S}$$

$$\frac{V_o}{V_{gs}} = \frac{-g_m R_D}{1+g_m R_S}$$

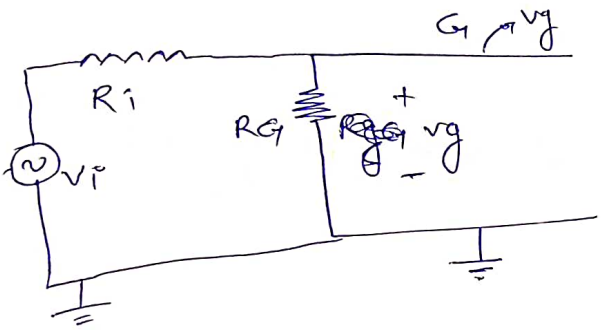

$$v_g = \frac{R_G}{R_G + R_1} \cdot V_i$$

$$\frac{V_o}{V_i} = \frac{V_o}{v_g} \cdot \frac{v_g}{V_i}$$

Homework

Q)

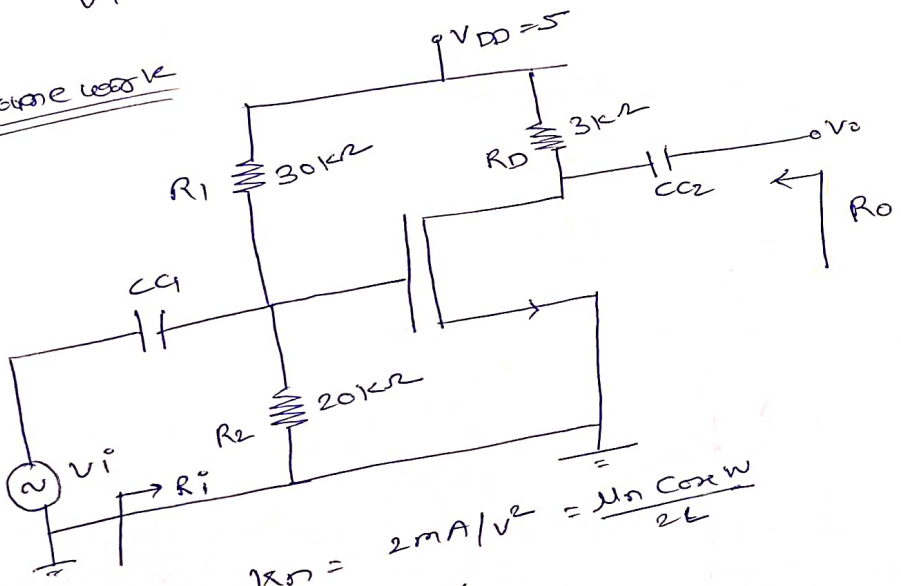

① $\frac{V_o}{V_i} = ?$ upto one decimal

② $R_i = ?$

③ $R_o = ?$

$k_n = 2mA/V^2 = \frac{\mu_n C_{ox} W}{2L}$

$V_{th} = 1.2V.$

Sol:- DC Analysis

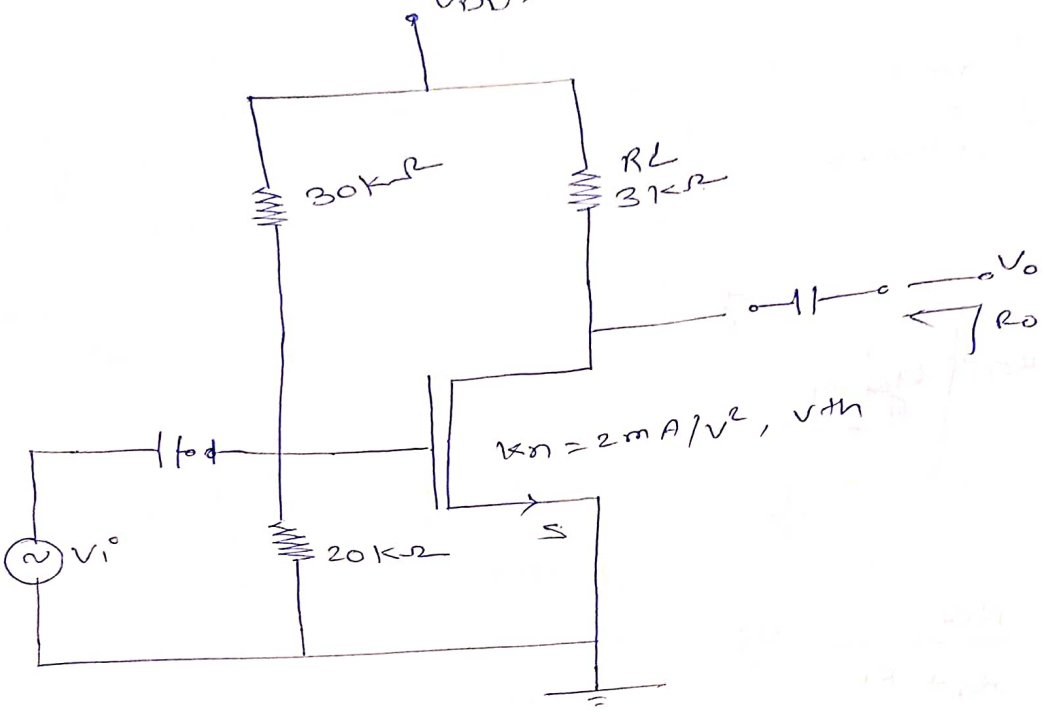

$I_{DS} = 1.28\,mA$

$g_m = 2\sqrt{K_n \times I_{DS}} = 2\sqrt{2 \times 1.28}$

AC analysis

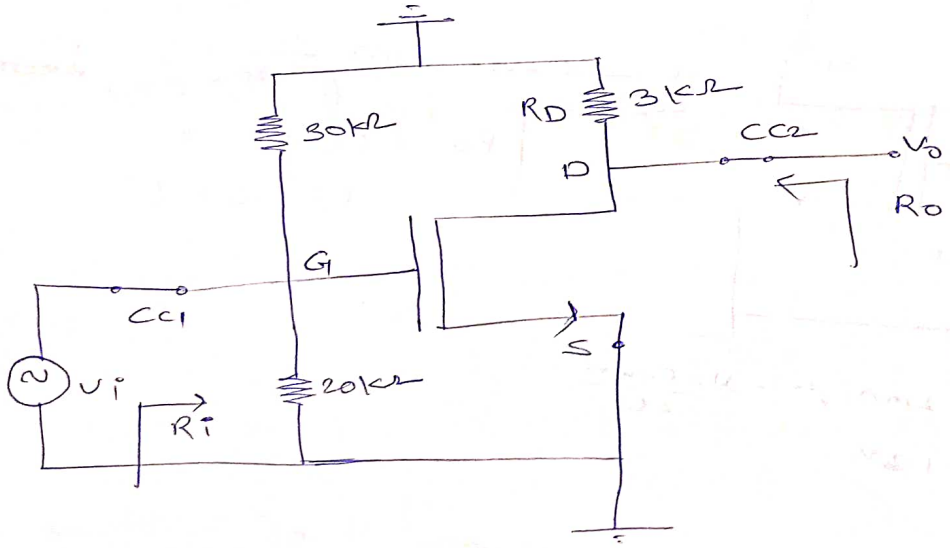

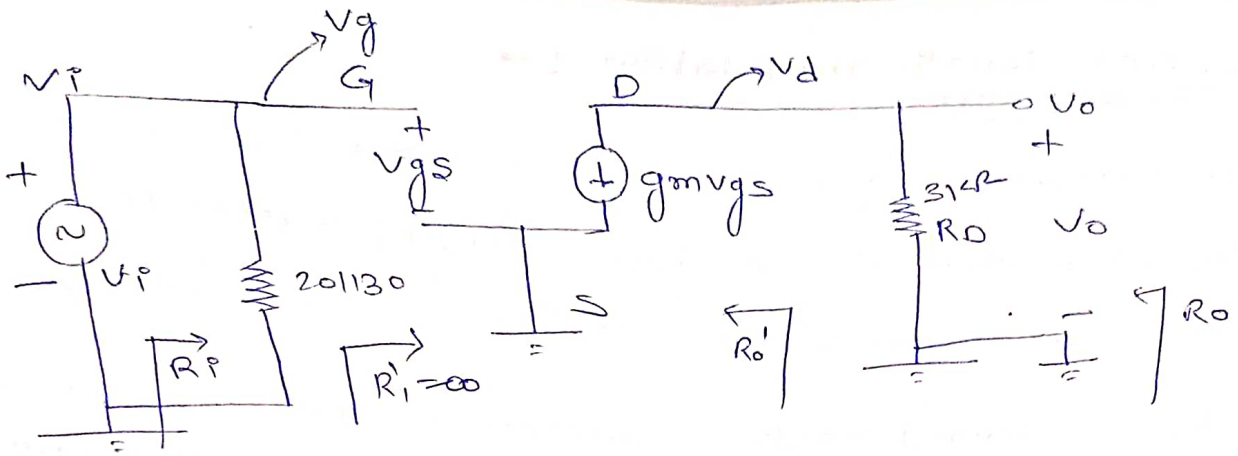

$$\frac{V_d}{V_g} = \frac{-g_m R_D}{1 + g_m \times 0} = -g_m R_D = -g_m \times R_D = -9.6$$

$$\frac{V_o}{V_i} = -g_m R_D = -9.6$$

$$R_i = 201130 \parallel R_i'$$
$$= 201130$$
$$= 12K\Omega$$

$$R_o' = \infty$$

$$R_o = R_o' \parallel R_D$$
$$R_o = R_D = 3K\Omega$$

Channel length modulation :→

1) In saturation region when we increase V_{DS} above $V_{GS} - V_{th}$ then effective channel length decreases and this phenomenon is called channel length modulation

due to channel length modulation current I_{DS} increases (slite increase/small increase) ~~in saturation~~ with increase in V_{DS} voltage in saturation region

2) Due to channel length modulation in ~~ac~~ AC model, there is an output resistance r_d or r_o present between D & S terminals.

$$r_d \text{ or } r_o = \frac{1}{\lambda I_{DS}}$$

ideal value $= \infty$

$$= \frac{(1/\lambda)}{I_{DS}}$$

$I_{DS} \rightarrow$ DC operating current

$\lambda \rightarrow$ channel length modulation parameter (V^{-1})

normally its value is very very small

ideal value of $\lambda = 0$

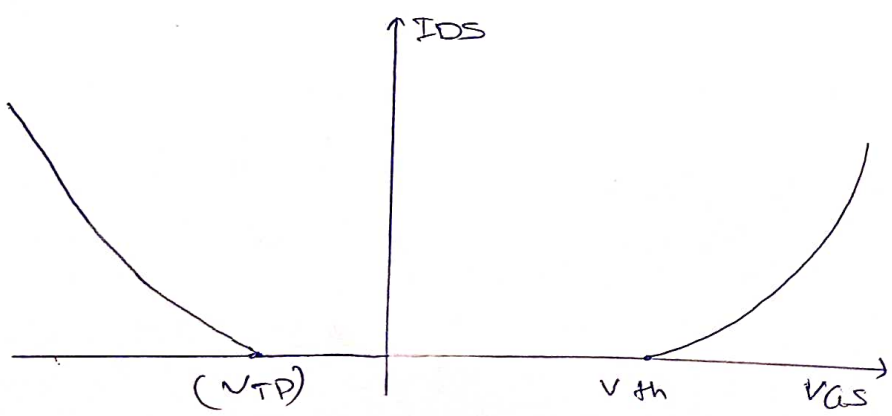

Q)

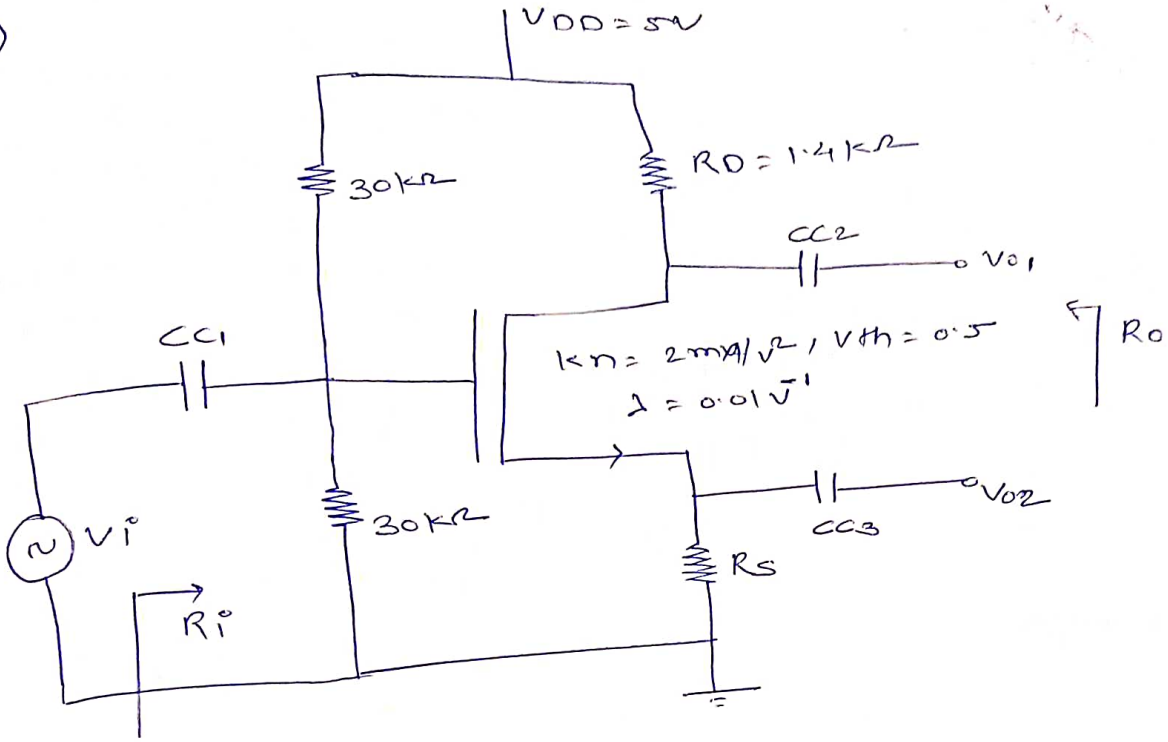

$\frac{V_{o1}}{V_i} =$

$\frac{V_{o2}}{V_i} =$

Solⁿ:- DC analysis

$I_{DS} = 2mA$

$g_m = 2\sqrt{K_n I_{DS}} = 2\sqrt{2 \times 2} = 4mA/V^2$

$r_o = \frac{1}{\lambda I_{DS}} = \frac{1}{0.01 \times 2} = \frac{100}{2} = 50k\Omega$

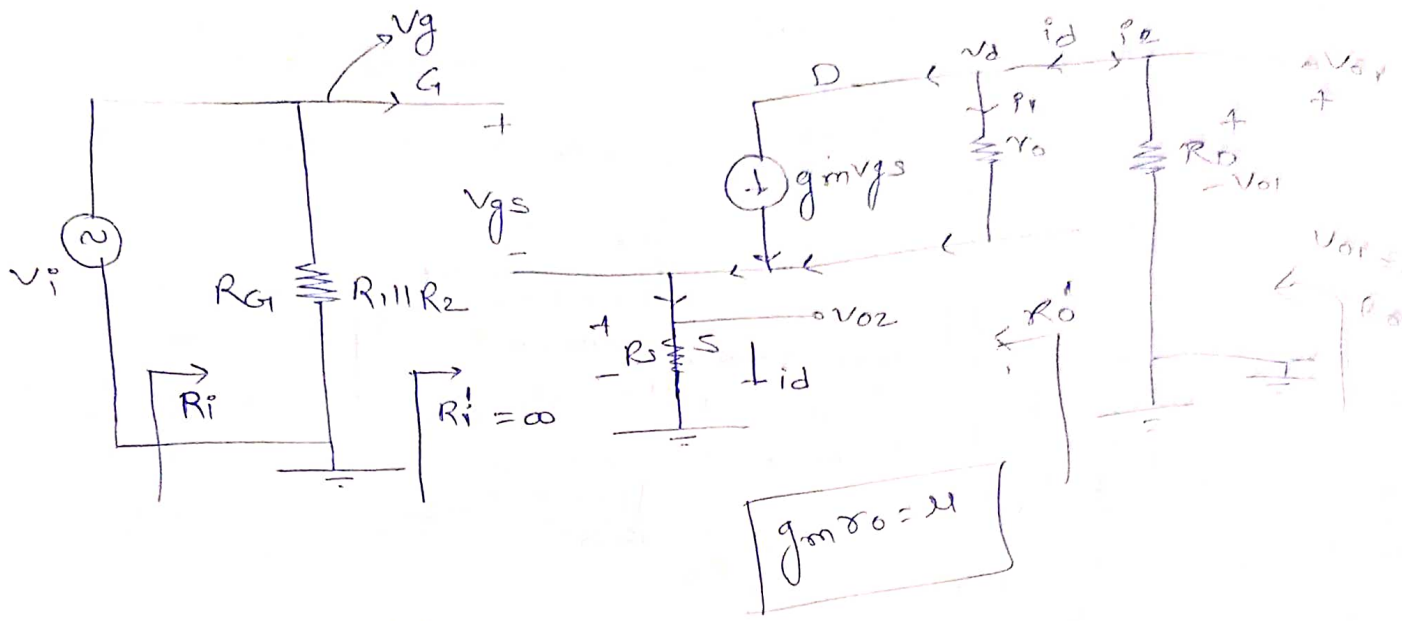

$$i_d = i_1 + g_m V_{gs}$$

$$V_g - V_{gs} - i_d R_S = 0$$

$$V_{gs} = (V_g - i_d R_S)$$

$$V_d - i_1 r_o - i_d R_S = 0$$

$$V_d = i_1 r_o + i_d R_S$$

$$V_d = (i_d - g_m V_{gs}) r_o + i_d R_S$$

$$V_d = i_d [r_o + R_S] - g_m r_o [V_{gs}]$$

$$V_d = i_d [r_o + R_S] - \mu [V_g - i_d R_S]$$

$$V_d = i_d [r_o + (\mu + 1) R_S] - \mu V_g$$

$$V_d = i_2 R_D = - i_d R_D$$

$$-i_d R_D = i_d\left[r_o + (\mu+1)\right] R_S - \mu v_g$$

$$\boxed{i_d = \frac{\mu v_g}{R_D + R_o + (\mu+1) R_S}}$$

net resistance betn source & ground

Net Resistance betn Drain & ground.

$$i_d = \frac{\mu v_g}{R_D + r_o + (\mu+1) R_S}$$

$r_o \longrightarrow \infty$

$$i_d = \frac{\mu v_g}{R_D + (\mu+1) R_S} \approx \frac{g_m v_g}{0 + 1 + (g_m + 0) R_S}$$

$$i_d = \frac{g_m v_g}{1 + g_m R_S}$$

$$V_d = -i_d R_D = \frac{-g_m R_D v_g}{1 + g_m R_S} =$$

$$V_d = -i_d R_D = \frac{-g_m R_D v_g}{R_D + r_o + (\mu+1) R_S} =$$

$R_D + r_o + (\mu+1) R_S$ net resistance betn drain & gnd.

i) Common source amplifier :-

$$\frac{V_{o1}}{V_i} = ? \qquad \frac{V_d}{V_g} = \frac{V_{o1}}{V_i} = -1.843.$$

ii) Common drain amplifier:-

$$\frac{V_{o2}}{V_i}$$

$$V_{o2} = i_d R_s = \frac{\mu V_g R_s}{R_d + r_o + (\mu+1) R_s}$$

$$\frac{V_{o2}}{V_g} = \frac{V_s}{V_g} = \frac{\mu R_s}{R_D + r_o + (\mu+1) R_S} < 1$$

$$\frac{V_E}{V_B} \simeq 1$$

$$V_E \simeq V_B$$

$$\boxed{\frac{V_{o2}}{V_i} = \frac{\mu R_S}{R_D + r_o + (\mu+1) R_S} = 0.658}$$

$$R_S = 0, \quad \frac{V_{o1}}{V_i}$$

$$\frac{V_d}{V_g} = \frac{-\mu R_D}{R_D + r_o + 0} = \frac{-\mu R_D}{r_o + R_D}$$

$$\frac{V_{o1}}{V_i} = \frac{-\mu R_D}{r_o + R_D} = -5.447$$

$$R_o' = \frac{V_2}{I_2}$$

$$v_g - v_{gs} - I_2 R_s = 0$$

$$0 - v_{gs} - I_2 R_s = 0$$

$$v_{gs} = -I_2 R_s \quad - (1)$$

$$V_2 - I_1 r_o - I_2 R_s = 0$$

$$V_2 = I_1 r_o + I_2 R_s$$

$$V_2 = (I_2 - g_m v_{gs}) r_o + I_2 R_s$$

$$V_2 = I_2 (r_o + R_s) - g_m r_o v_{gs}$$

$$V_2 = I_2 (r_o + R_s) + \mu I_2 R_s$$

$$V_2 = I_2 [r_o + (\mu + 1) R_s]$$

$$\boxed{\frac{V_2}{I_2} = r_o + (\mu + 1) R_s} = R_o'$$

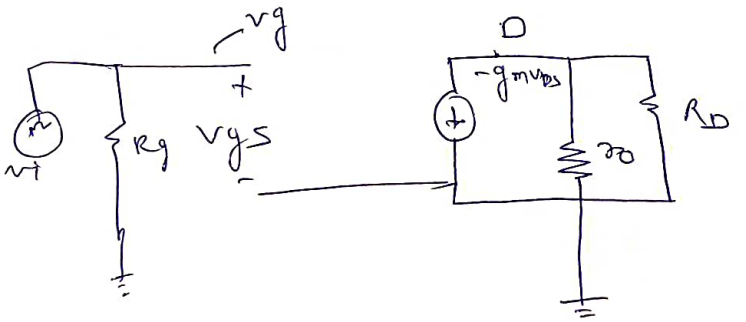

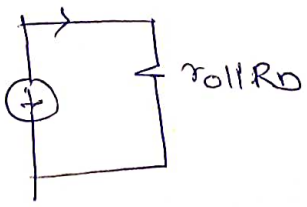

$$V_d = -(g_m v_{gs} \cdot r_o \| R_D)$$

$$= -g_m (r_o \| R_D) v_g$$

$$\frac{V_d}{V_g} = -g_m (r_o \| R_D)$$

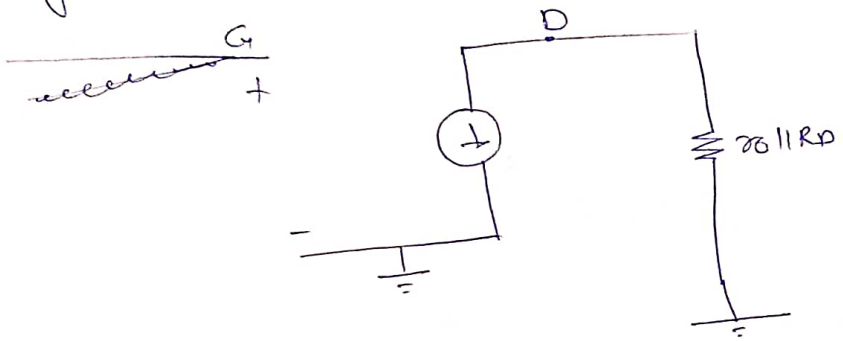

$$\frac{V_d}{V_g} = \frac{-g_m (r_o \| R_D)}{1}$$

$$= -g_m (r_o \| R_D)$$

$$\frac{V_d}{V_g} = \frac{-g_m R_D}{1 + g_m \cdot 0} = -g_m R_D$$

Q)

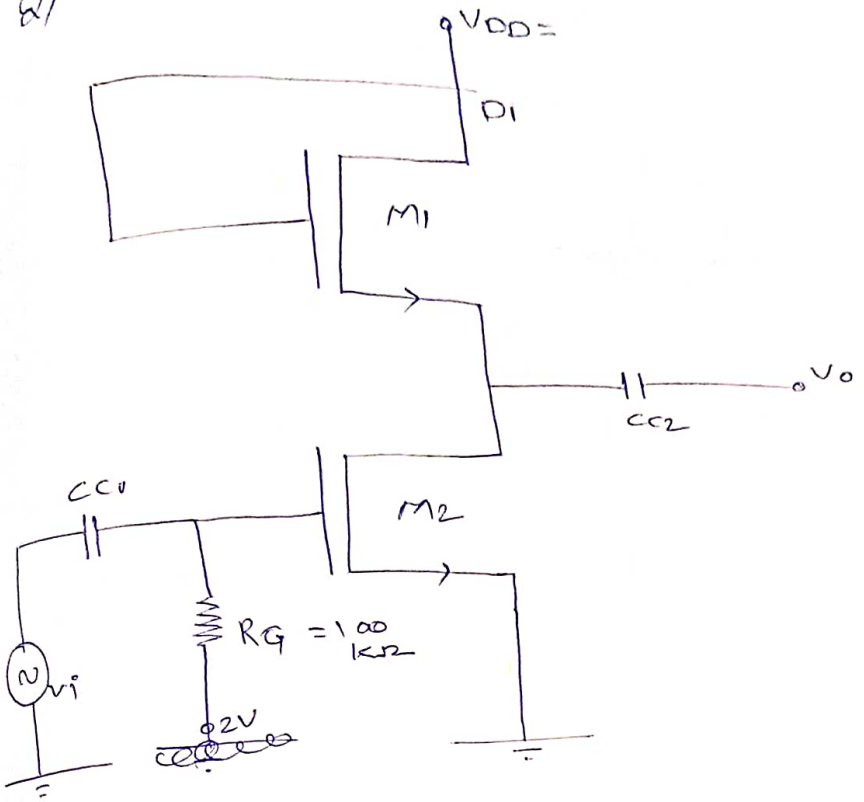

$M_1 \Rightarrow K_n = 0.8\ mA/V^2$

$V_{th} = 1V$

$M_2 = K_n = 1mA/V^2,\ V_{th} = 0.5V$

case

1) Drain & Gate are shorted or connected.

$V_D = V_G$

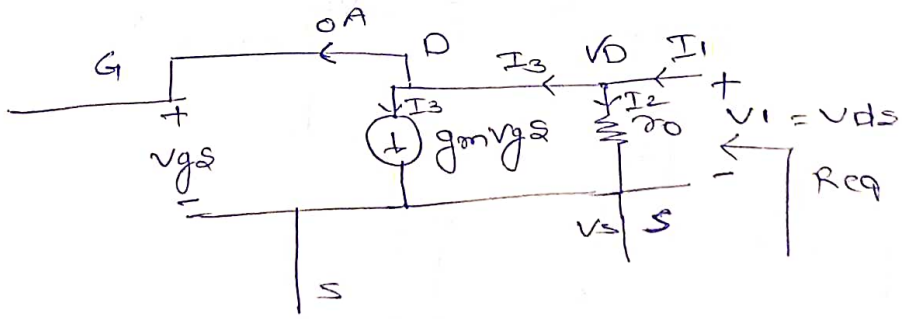

$I_3 = g_m V_{gs}$

$V_g - V_s = V_d - V_s$

$\boxed{V_{gs} = V_1}$

$I_1 = I_2 + I_3$

$I_1 = \frac{V_1}{r_o} + g_m V_1$

$\Rightarrow \frac{V_1}{I_1} = R_{eq} = \frac{1}{\frac{1}{R_o} + g_m} = \frac{1}{\frac{1}{r_o} + \frac{1}{(1/g_m)}}$

$R_{eq} = \left(r_o \parallel \frac{1}{g_m}\right)$

$V_{gs} - i_1 r_o = 0$

$V_{gs} + g_m V_{gs} r_o = 0$

$V_{gs}(1 + g_m r_o) = 0$

$\boxed{V_{gs} = 0}$

ii) In AC model

$V_{gs} = 0$

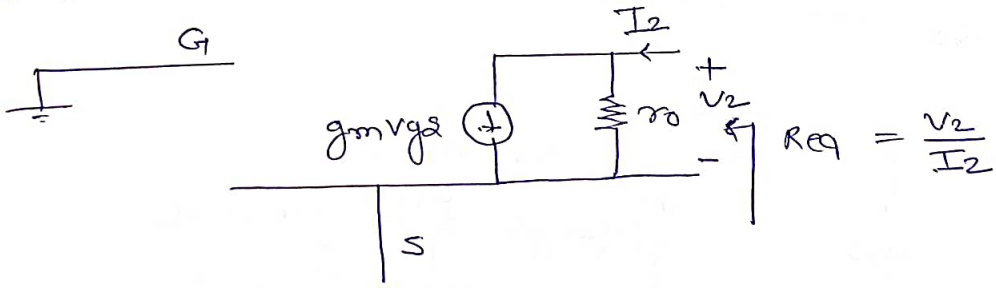

$R_{eq} = \frac{V_2}{I_2}$

|||

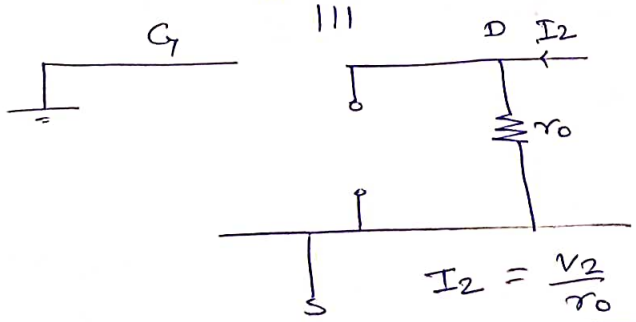

$I_2 = \frac{V_2}{r_o}$

$\boxed{R_{eq} = \frac{V_2}{I_2} = r_o}$

Q)

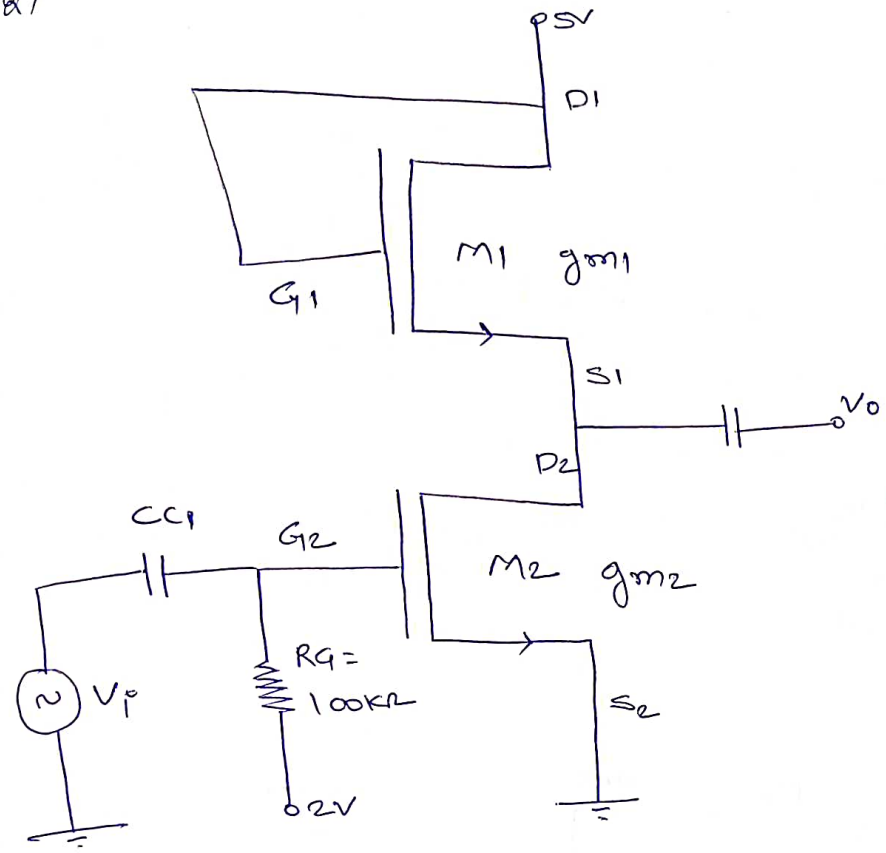

i) $\lambda_1, \lambda_2 = 0$

$r_{o1} = \infty$

$r_{o2} = \infty$

$\frac{V_o}{V_i}$

ii) $\lambda_1 = 0.01\ V^{-1}$

$\lambda_2 = 0.008\ V^{-1}$

$\frac{V_o}{V_i}$

AC model

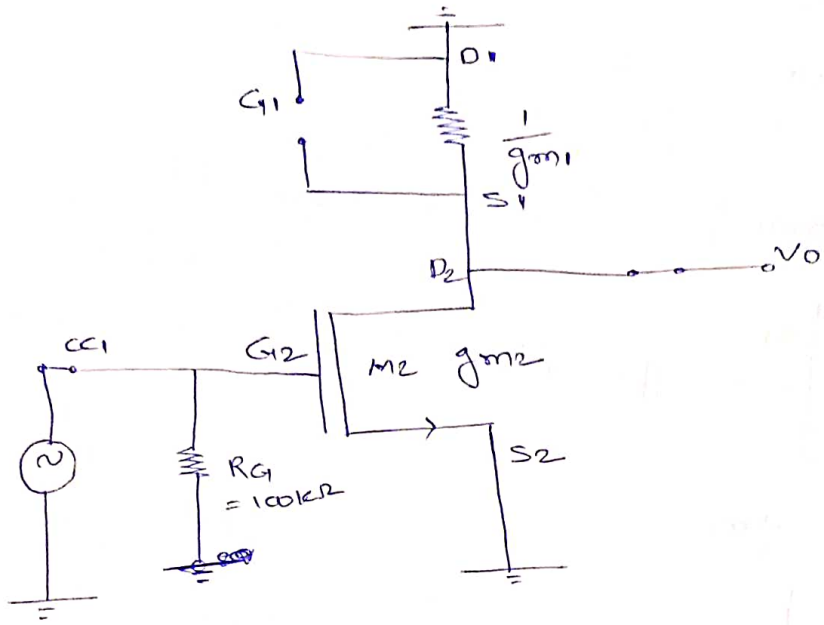

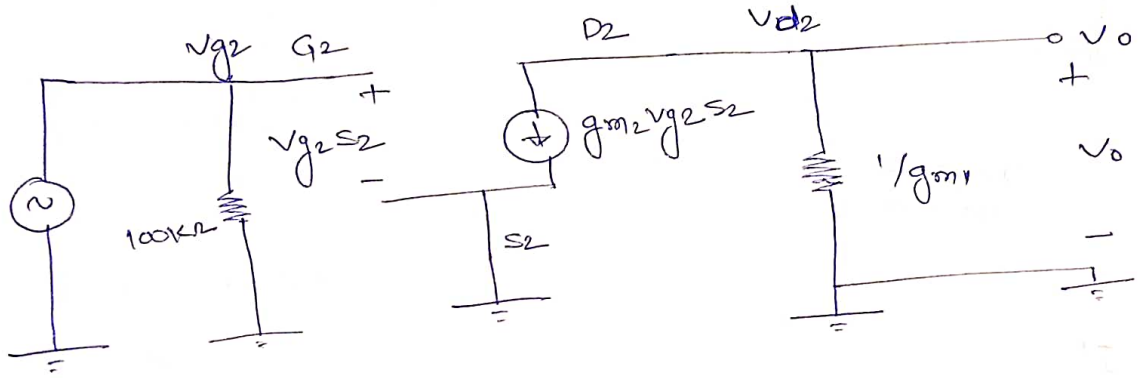

$$\frac{V_{d2}}{V_{g2}} = \frac{-g_{m2}\,(1/g_{m1})}{1+0} = -g_{m2}/g_{m1}$$

$$\boxed{\frac{V_o}{V_i} = \frac{-g_{m2}}{g_{m1}}}$$

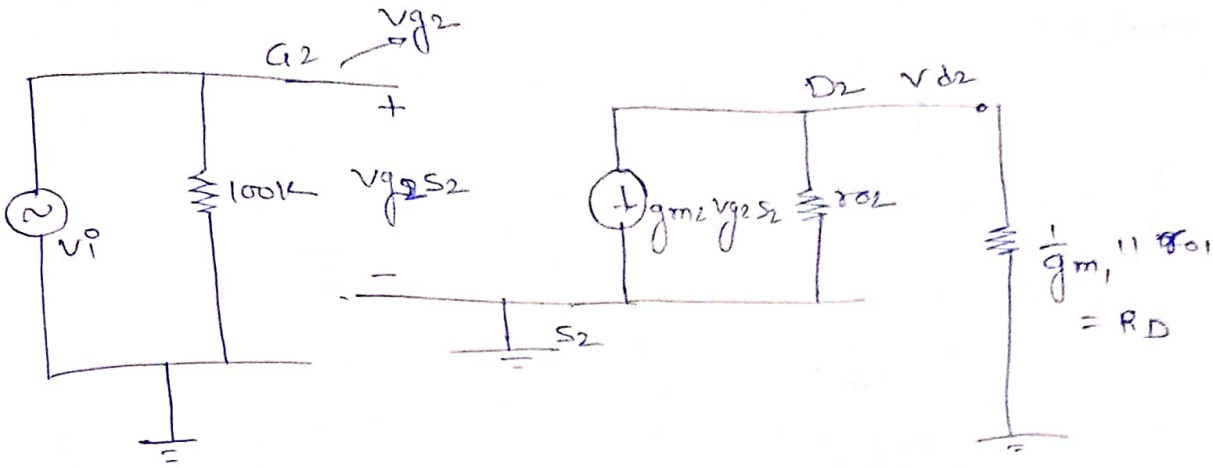

$$\frac{V_{d2}}{V_{g2}} = \frac{-\mu_2\left(\frac{1}{g_{m1}} \parallel r_{o1}\right)}{R_D + r_{o2} + 0} = \frac{-g_{m2} \cdot r_{o2} R_D}{r_{o2} + R_D} = -g_{m2}\left[r_{o2} \parallel R_D\right]$$

$$\frac{V_{d2}}{V_{g2}} = -g_{m2}\left[r_{o2} \parallel r_{o1} \parallel \frac{1}{g_{m1}}\right]$$

Q)

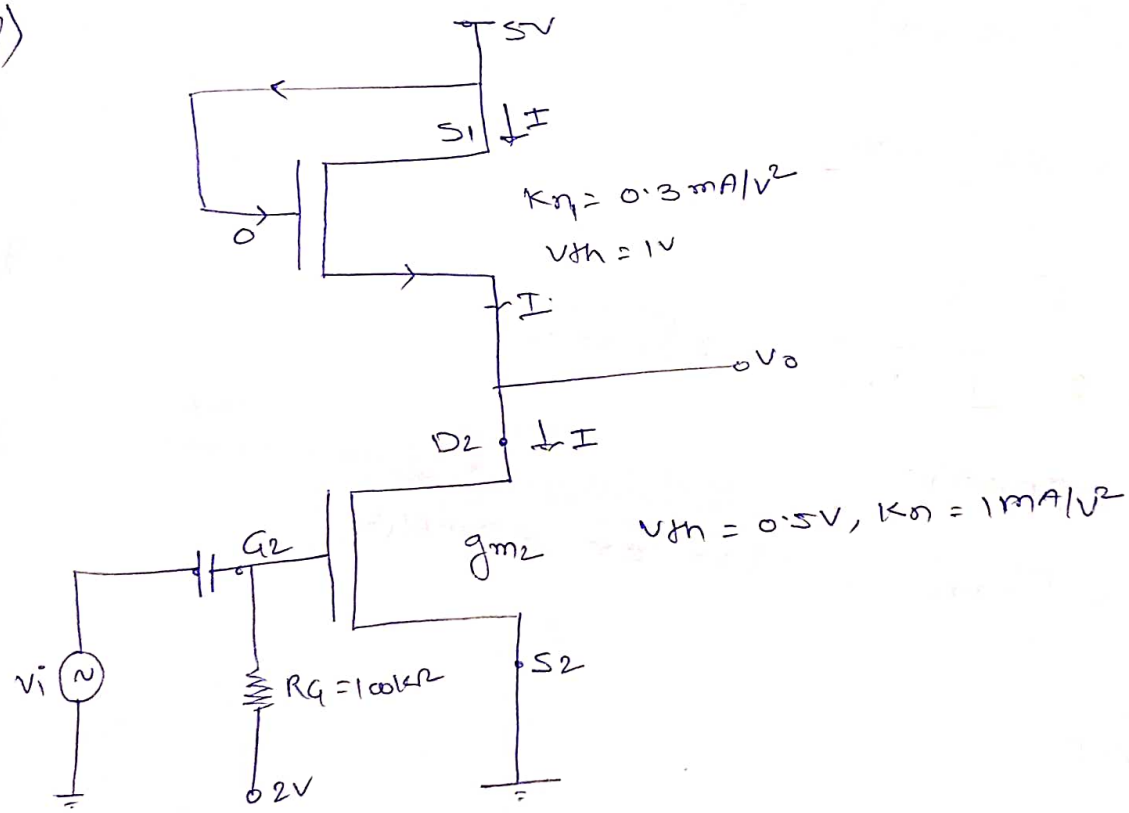

DC Analysis

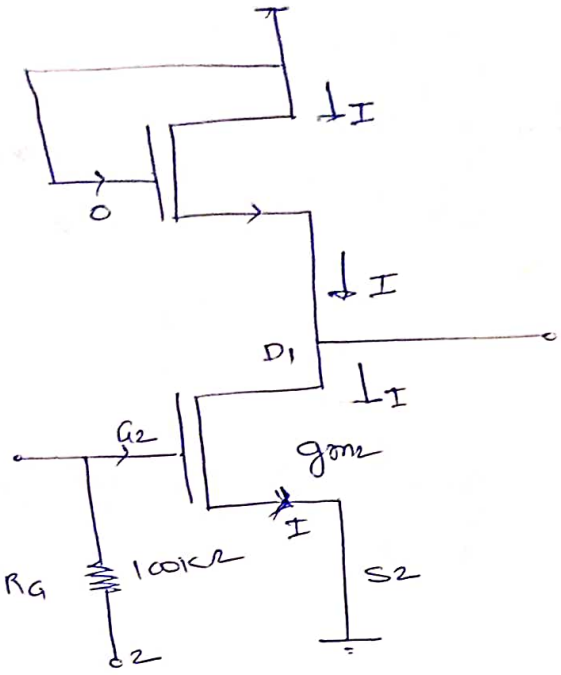

$$I = K_{n2}[V_{GS}-V_{th}]_2^2 = 1[2-0.5]^2 = (1.5)^2 = 2.25\,mA$$

$$I = K_{n1}[V_{GS}-V_{th}]_1^2 = 0.8[5-V_1-1]^2$$

$$2.25 = 0.8[4-V_1]^2$$

$$4-V_1 = \sqrt{\frac{2.25}{0.8}}$$

$$g_{m1} = 2\sqrt{I K_{n1}} = 2\sqrt{2.25\times 0.8}$$

$$g_{m1} = 2.70\,mA/V^2$$

$$g_{m2} = 2\sqrt{I K_{n2}} = 2\sqrt{1\times 2.25} = 3\,mA/V^2$$

$$r_{o1} = \frac{1}{\lambda_1 I}$$

$$r_{o2} = \frac{1}{\lambda_2 I}$$

Q)

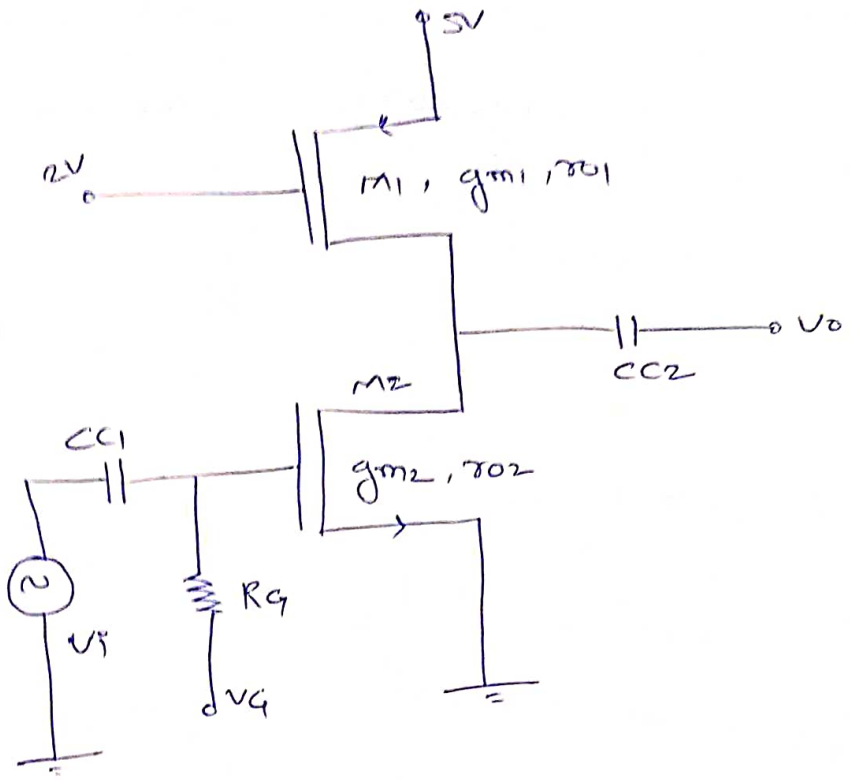

$\frac{V_o}{V_i} =$ _____

a) $-g_{m2}\left[\frac{1}{g_{m1}}\right]$ b) $-g_{m2}\left[r_{o1} \parallel r_{o2}\right]$

c) $-g_{m2}\left[\frac{1}{g_{m1}} \parallel r_{o1} \parallel r_{o2}\right]$ d) $-g_{m2}\left[r_{o2} \parallel \frac{1}{g_{m1}}\right]$

Soln:-

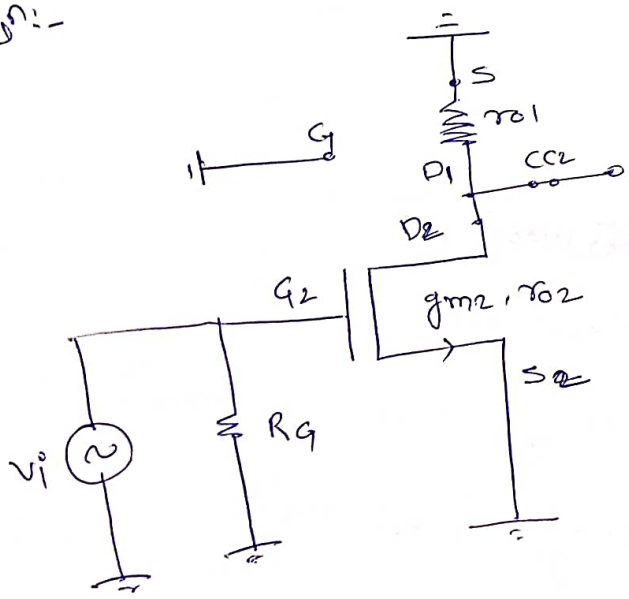

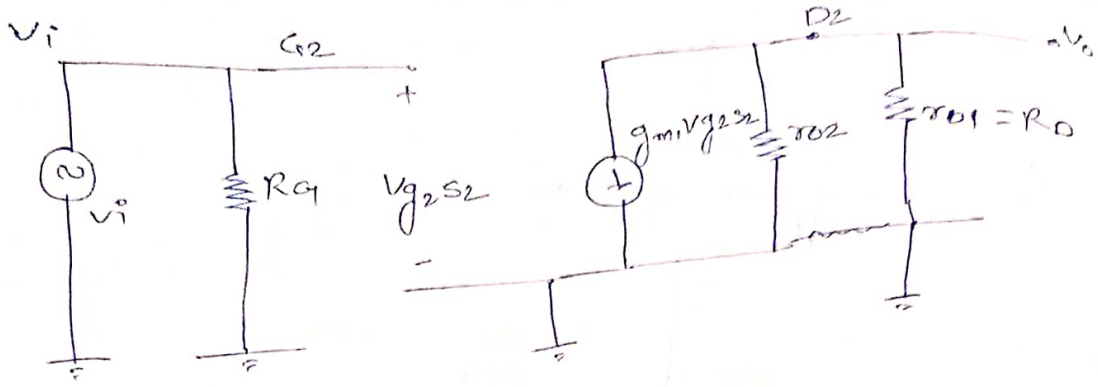

$$\boxed{\frac{V_o}{V_i} = \frac{V_{d2}}{V_{G2}} = -g_{m2}\left(r_{o2} \parallel r_{o1}\right)}$$

ii) $K_{p1} = 2mA/V^2$, $|V_{TP}| = 1V$, $\lambda_1 = 0.005V^{-1}$

$K_{n2} = 4.5mA/V^2$, $\lambda_2 = 0.01V^{-1}$

$\frac{V_o}{V_i} =$

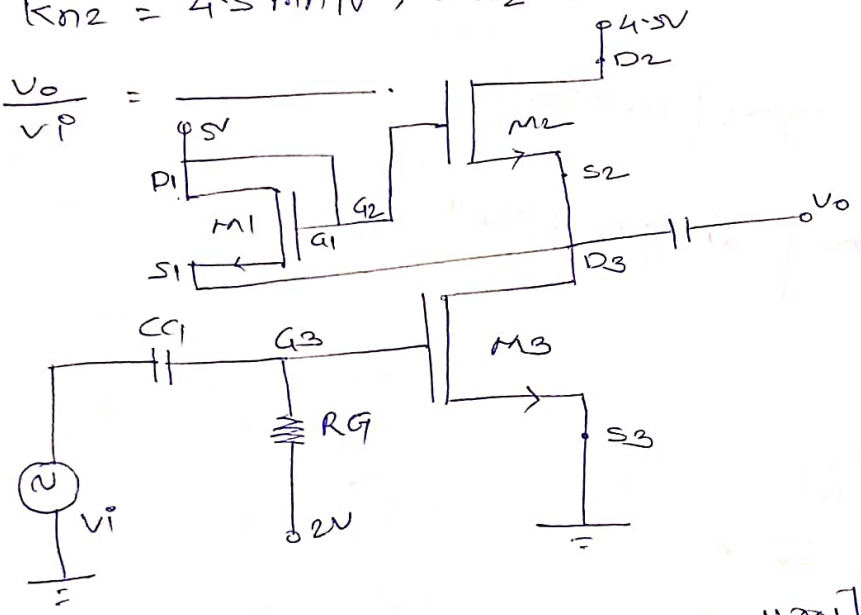

$\frac{V_o}{V_i} \longrightarrow$

a) $-g_{m3}[r_{o3} \parallel r_{o2} \parallel r_{o1}]$

b) $-g_{m3}\left[r_{o3} \parallel r_{o2} \parallel r_{o1} \parallel \frac{1}{g_{m1}}\right]$

✓ c) $-g_{m3}\left[\frac{1}{g_{m1}} \parallel \frac{1}{g_{m2}} \parallel r_{o1} \parallel r_{o2} \parallel r_{o3}\right]$

d) $-g_{m3}\left[\frac{1}{g_{m1}} \parallel \frac{1}{g_{m2}} \parallel r_{o1} \parallel r_{o2}\right]$

AC model

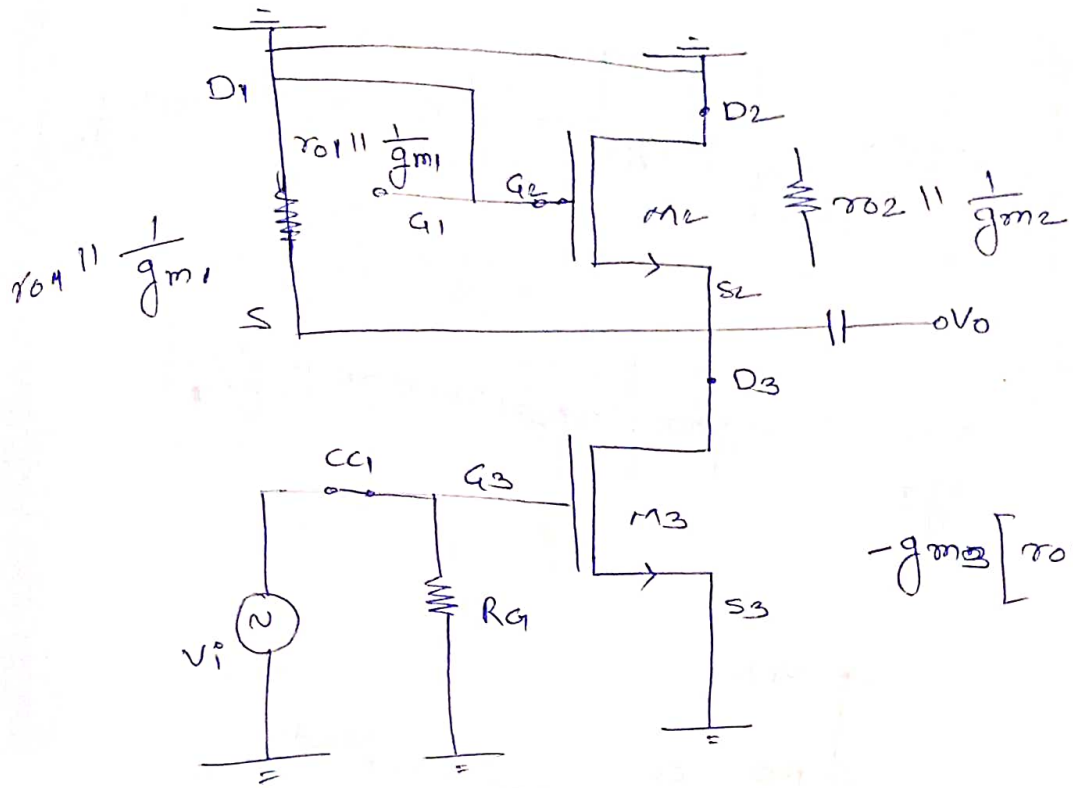

$$-g_{m3}\left[r_{o1} \parallel \frac{1}{g_{m1}} \parallel \left(r_{o2} \parallel \frac{1}{g_{m2}}\right) \parallel r_{o3}\right]$$

$V_{g1s1} = V_{g2s2}$

$0 = V_{g2s2}$

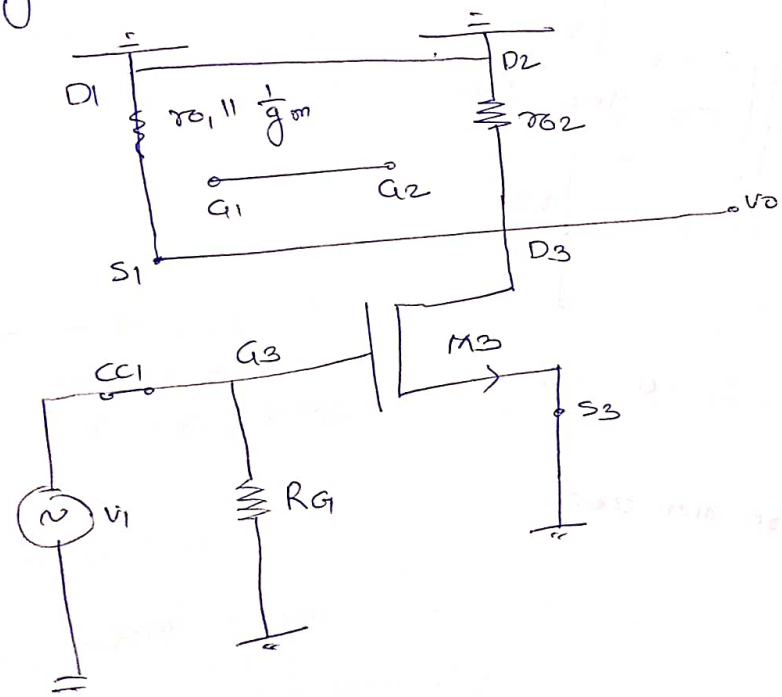

π- model

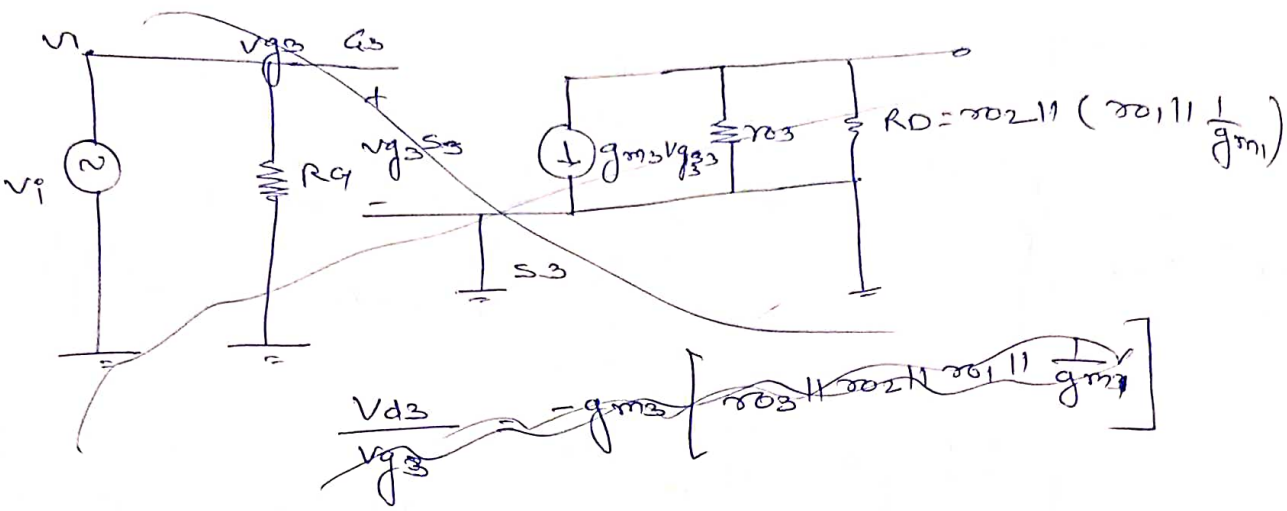

Q)

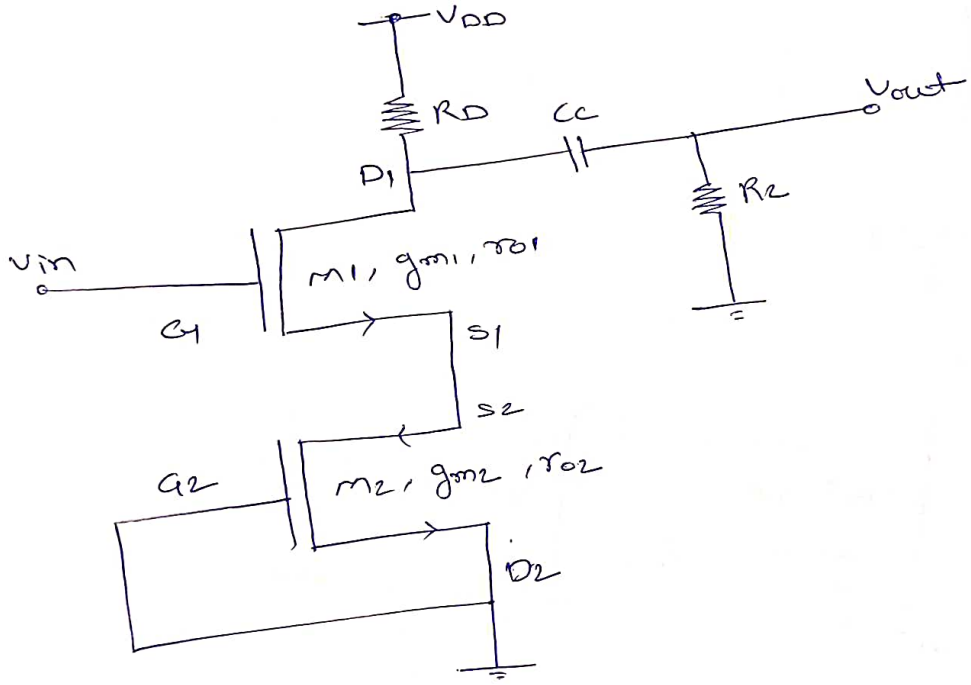

i) $\frac{V_o}{V_{in}} \longrightarrow \lambda_1 = \lambda_2 = 0$

ii) $\frac{V_o}{V_{in}}$, λ_1 & λ_2 are non zero

AC analysis

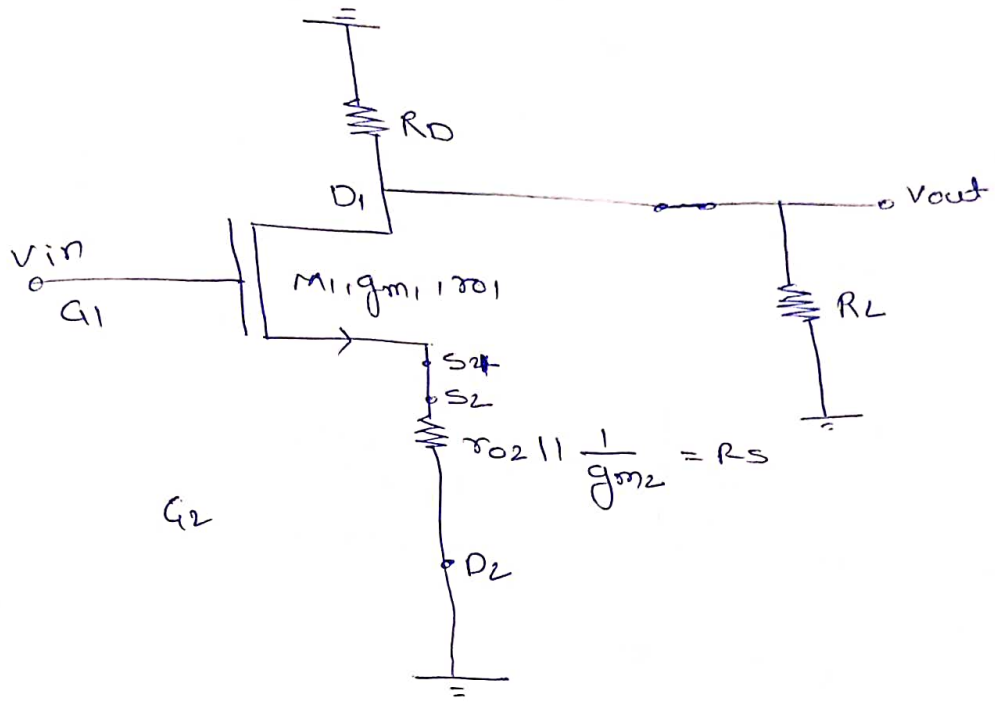

π model

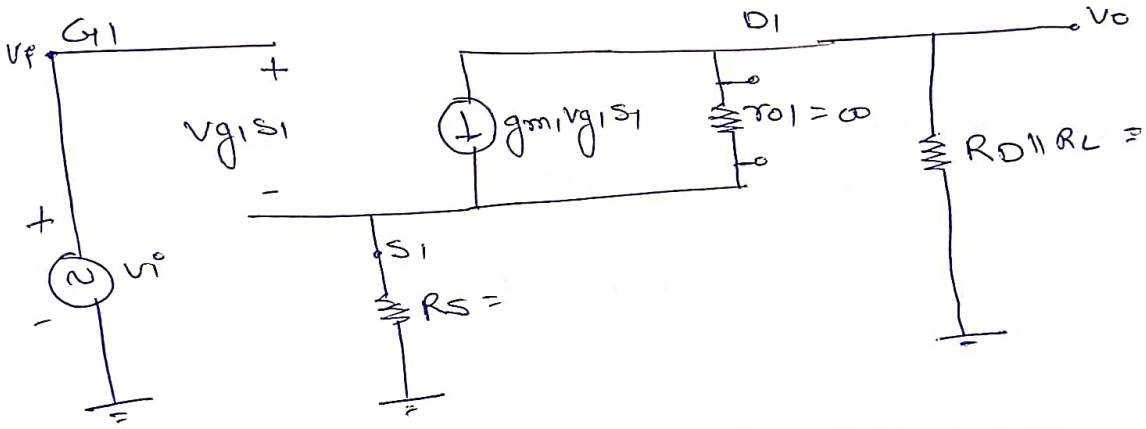

r_{o1} & $r_{o2} \to \infty$

$$\frac{V_{d1}}{V_{g1}} = \frac{-\mu_1 (R_D \| R_L)}{(R_D \| R_L) + r_{o1} + (\mu_1 + 1) R_s} = \frac{v_o}{v_i}$$

if r_{o1} & $r_{o2} = \infty$

$$\frac{V_{d1}}{V_{g1}} = \frac{-g_{m1}(R_D \| R_L)}{1 + g_{m1} \cdot \frac{1}{g_{m2}}}$$

Q)

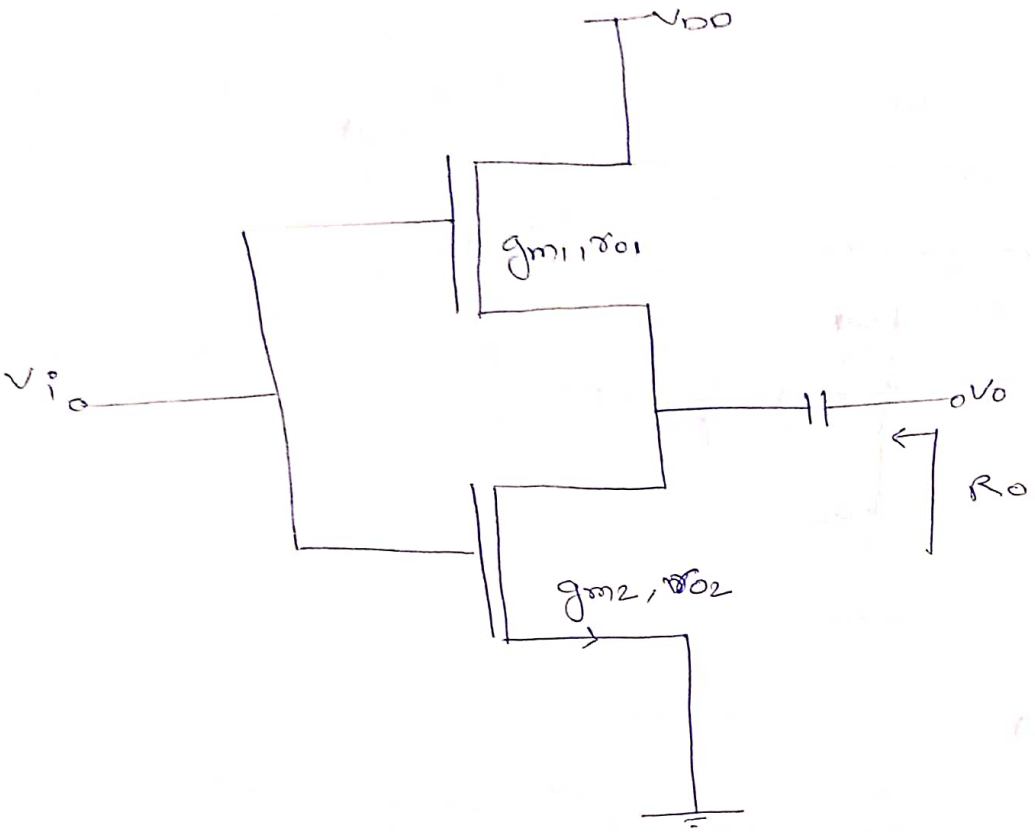

1) value of Ro is

a) $r_{o1} \parallel r_{o2}$ b) $\frac{1}{g_{m1}} \parallel r_{o1} \parallel r_{o2}$

c) $\frac{1}{g_{m2}} \parallel r_{o1} \parallel r_{o2}$ d) $\frac{1}{g_{m2}} \parallel r_{o1} \parallel r_{o2}$

2) value of $\frac{V_o}{V_i}$

a) $-g_{m2}\left[r_{o1} \parallel r_{o2} \parallel \frac{1}{g_{m1}}\right]$

b) $-(g_{m2}-g_{m1})\left[r_{o1} \parallel r_{o2} \parallel \frac{1}{g_{m1}}\right]$

c) $-g_{m1}\left[r_{o1} \parallel r_{o2} \parallel \frac{1}{g_{m2}}\right]$

d) $-g_{m2}\left[r_{o2} \parallel \frac{1}{g_{m1}}\right]$

Q)

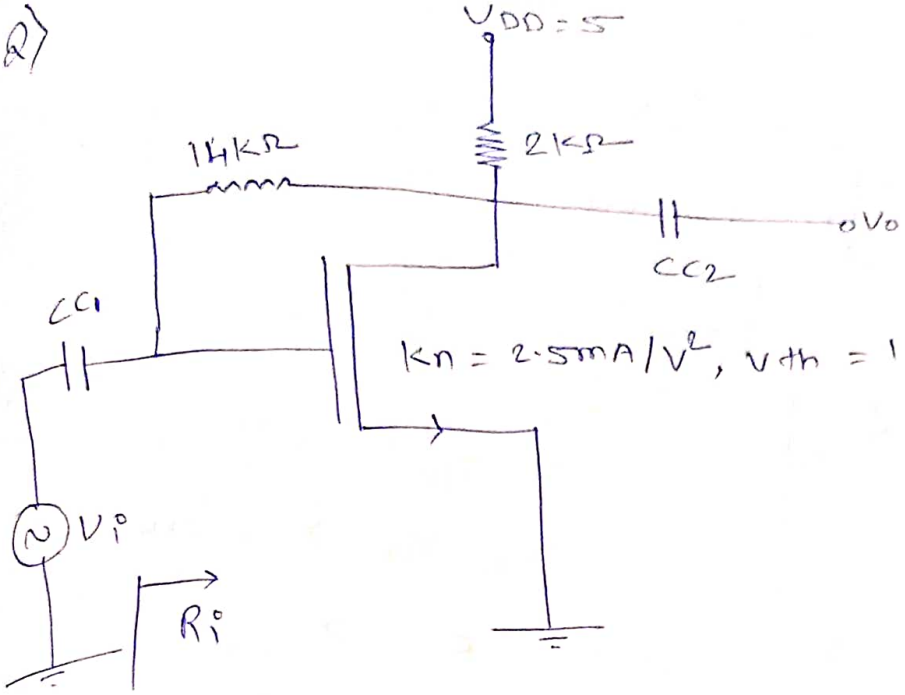

$\frac{V_o}{V_i} = ?$

$R_i = ?$

$R_o = ?$

$K_n = 2.5mA/V^2$, $V_{th} = 1$ volt

Sol:-

DC analysis

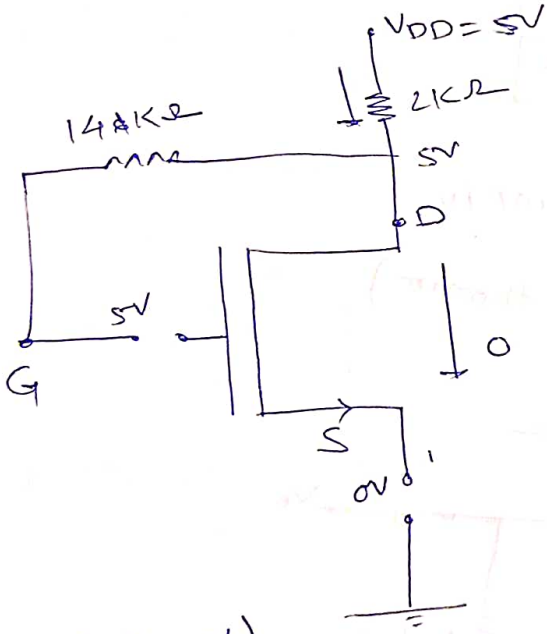

(MOSFET ON)

(saturation)

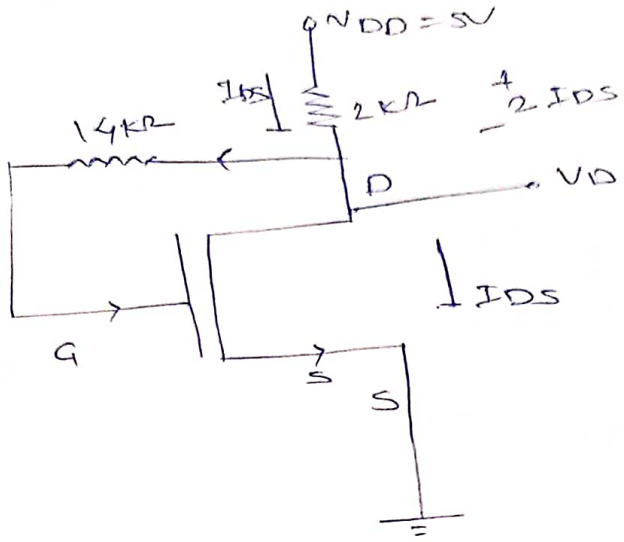

$V_D - V_G > -V_{th}$

$0 > -1$

$V_D = V_G$

$I_{DS} = k_n [V_{GS} - V_{th}]^2$

$I_{DS} = 2.5 [5 - 2 I_{DS} - 1]^2$

$\boxed{I_{DS} = 1.6mA}$ $g_m = 4mA/V$

AC Analysis (miller's theorem)

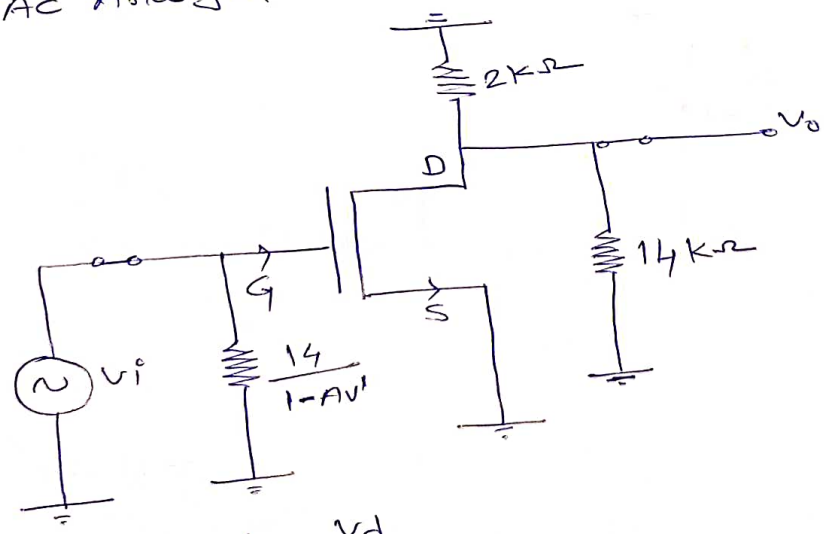

$A_V' = \frac{V_d}{V_g}$

AC ~~m~~ model

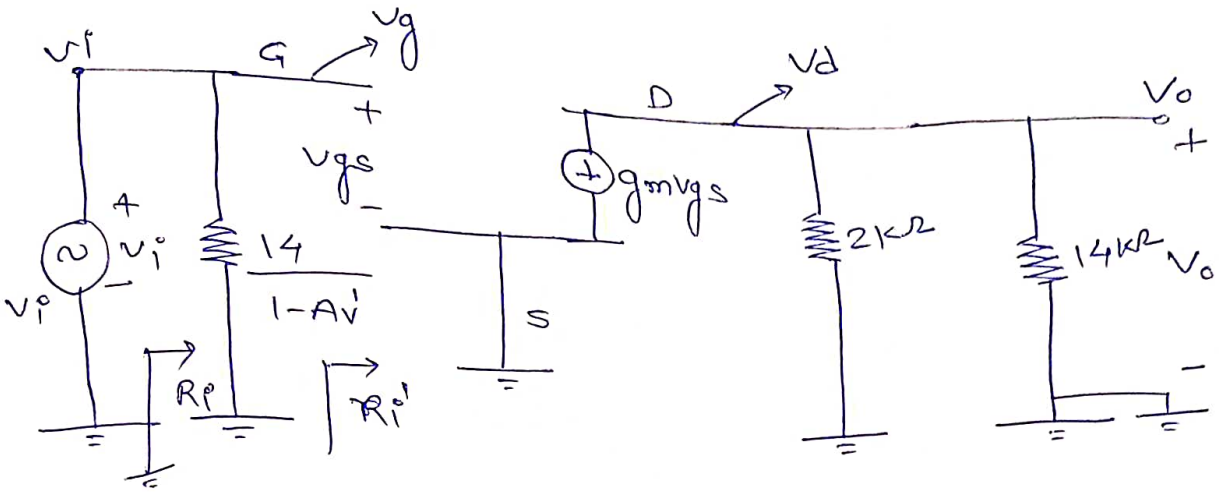

$$\frac{V_d}{V_g} = \frac{-g_m(2 \| 14)}{1 + g_m \times 0} = \frac{-4 \times 28/16}{1}$$

$$= -7$$

$$R_i = \frac{14}{8} \| R_i'$$

$$R_o = R_o' \| 2 \| 14$$

$$= \frac{28}{16} = \frac{14}{8}$$

$$\boxed{R_o = 1.75\,K\Omega}$$

Q)

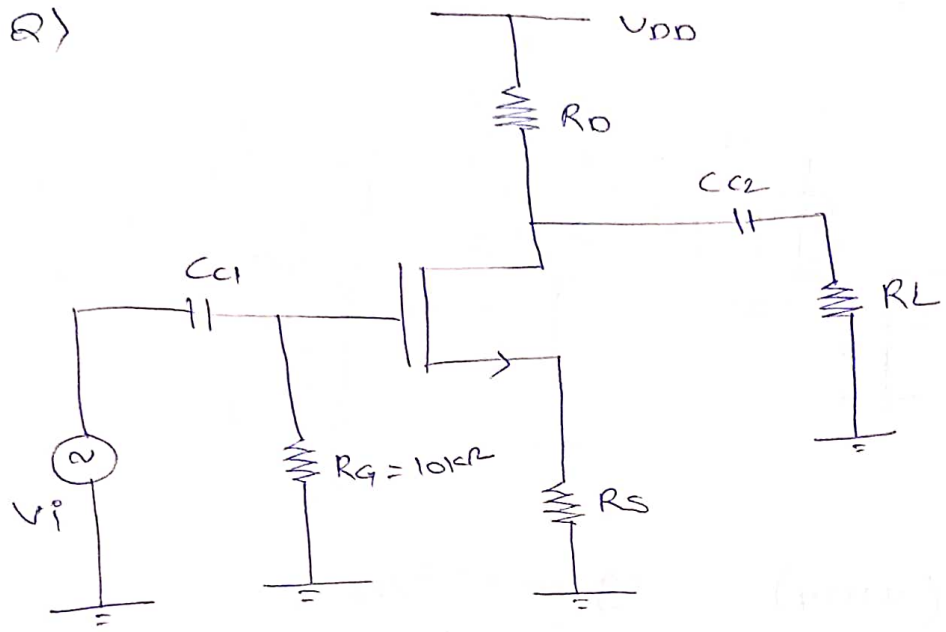

i) $\lambda = 0$

$CC_1 \longrightarrow \omega_1$

$CC_2 \longrightarrow \omega_2$

ii) $\lambda \neq 0$

Solⁿ:→ DC Analysis

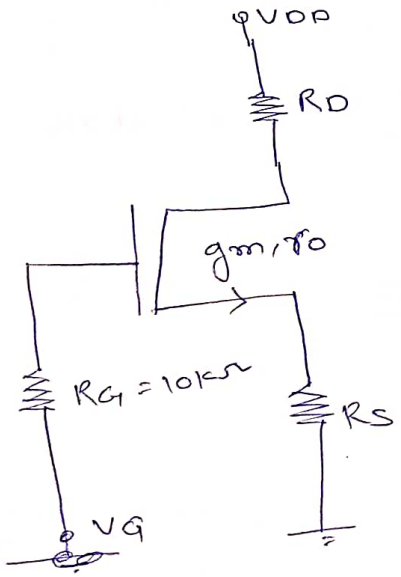

MOSFET is ON (saturation)

~~$I_{DS} = 1mA$~~

AC Analysis

Mosfet behaves as a High pass filter because of cc.

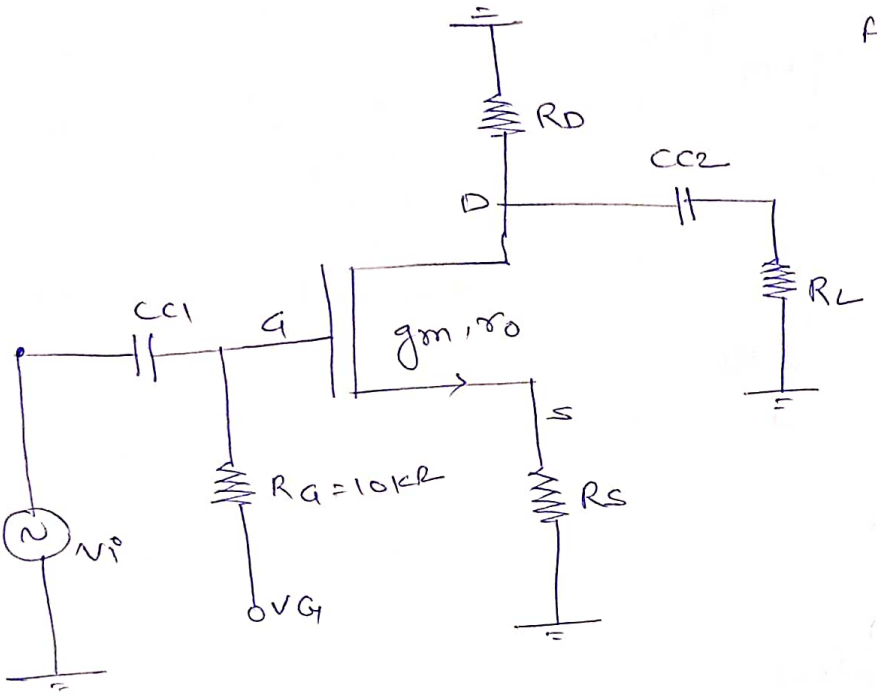

π model

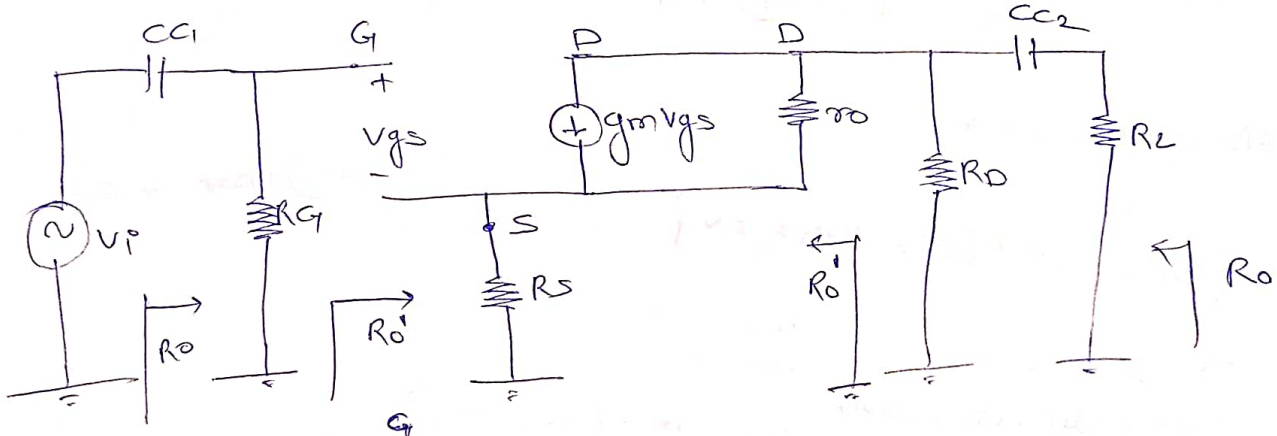

Req =

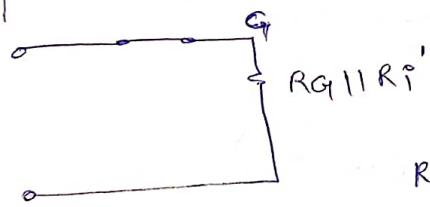

Req = RG || Ri'

$$\omega_1 = \frac{1}{T_1} = \frac{1}{R_{eq} C_{c_1}} = \frac{1}{R_a C_{c_1}}$$

$$R_o' = r_o + (\mu + 1) R_s$$

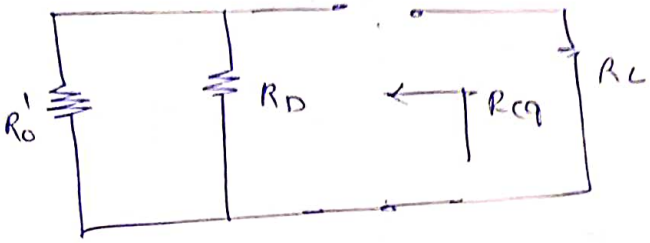

$\parallel\!\!\mid$ R_{eq}

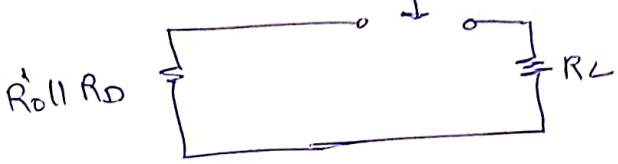

$$R_{eq}' = (R_o' \parallel R_D + R_L)$$

$$\omega_2 = \frac{1}{T_2} = \frac{1}{R_{eq}' C_{c_2}}$$

$$C_{c_1} \rightarrow \frac{1}{R_a C_{c_1}} \quad \text{or} \quad \frac{1}{(R_a + R_s) C_{c_1}}$$

2) above ckt

$I_{DS} = 1mA$

$\{K_n = 2mA/V^2, \; V_{th} = 2V\}$

i) $\lambda = 0$ —— $\omega_1 = ?$, $\omega_L = ?$

$C_{c_1} = 1\mu F$, $C_{c_2} = 0.5\mu F$ $\quad \omega = \max(\omega_1, \omega_2)$

ii) $\lambda = 0.0001$

$C_{c_1} = 1\mu F$ $\quad \omega_1, \omega_2, \omega = \max(\omega_1, \omega_2)$

$C_{c_2} = 0.5\mu F$

① $\omega_1 = \dfrac{1}{10\times10^{3}\times10^{-6}} = 100\ \text{rad/sec}$

$r_o = \dfrac{1}{\lambda I_{DS}} = 100\,k\Omega$

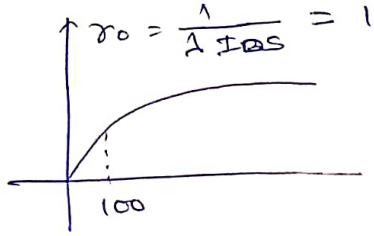

$g_m \cdot r_o = 2\sqrt{2}\times100 = 200\sqrt{2}$

$R_D = 2k\Omega$

$R_L = 2k\Omega$

$R_S = 1k\Omega$

$\omega_2 = \dfrac{1}{4\times10^{3}\times0.5\times10^{-6}} = 500\ \text{rad/sec}$

$\omega = \max(100, 500) = 500\ \text{rad/sec}.$

ii) $R_o' = r_o + (\mu+1)R_S = 100 + (200\sqrt{2}+1)\,||\,1$

$R_{eq}' = R_o' \,||\, R_D + R_L \cong 4k\Omega$

$R_o' = (101 + 200\sqrt{2})\,k\Omega$

$\omega_1 = 100\ \text{rad/sec}$

$\omega_2 = 501.2\ \text{rad/sec}$

$\omega = \max(\omega_1, \omega_2) = 501.2\ \text{rad/sec}.$

MOSFET :-

Lect 01

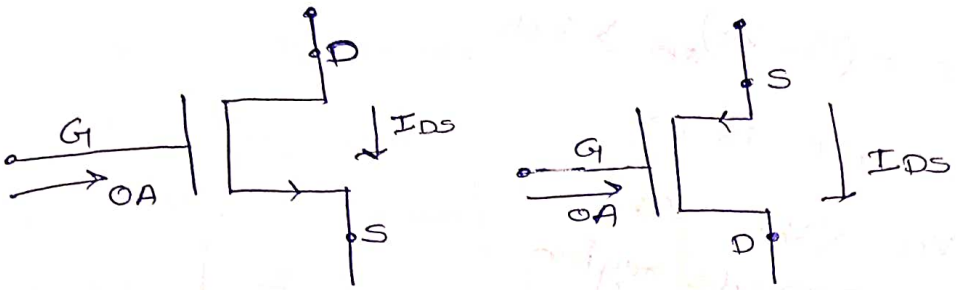

n-type - invert

p- type - outward

Gate - B
Drain - C
Source - E

n-type MOSFET → Drain is at higher potential compare to source → current flows from Drain to Source

p-type MOSFET → source is at higher potential compare to drain → current flows from source to Drain.

MOSFET
- ON
  - triode - linear
  - sta turation
- OFF → cut off

n-type MOSFET :→

if (i) $V_{GS} = (V_G - V_S) > V_{th}$

n-type MOSFET is ON

a) if $V_{DS} < V_{GS} - V_{th}$

→ Triode region

$$I_{DS} = K_n \left[2(V_{GS} - V_{th}) V_{DS} - V_{DS}^2 \right]$$

where $K_n = \dfrac{\mu_n C_{ox} W}{2L}$ $\qquad \dfrac{W}{L}$ → asspect ratio.

C_{ox} → capacitance/area

b). if $V_{DS} \geq V_{GS} - V_{th}$

→ saturation region

$$I_{DS} = K_n \left[V_{DS} - V_{th} \right]^2$$

~~p-type MOSFET~~

if $V_{GS} < V_{th}$ → MOSFE → cutoff - OFF.

p-type MOSFET

if $V_{SG} = (V_S - V_G) > |V_{th}|$

→ ON →

a) if $V_{SD} < V_{SG} + V_{th}$

Triode region

$$I_{DS} = K_p \left[2 (V_{SG} + V_{th}) V_{SD} - V_{SD}^2 \right]$$

$$K_p = \frac{\mu_p C_{ox} W}{2L}$$

b) if $V_{SD} \geq V_{SG} + V_{th}$

saturation

$$\boxed{I_{DS} = K_p \left[V_{SG} + V_{th} \right]^2}$$

Lect-02

i)

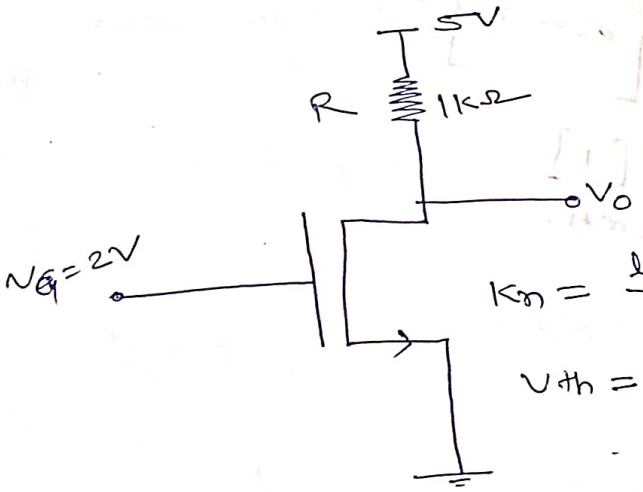

$$K_n = \frac{\mu_n C_{ox} W}{2L} = 2mA/V^2$$

$V_{th} = 1V$

ii) R = 2.2KΩ

I_{DS} _____ mA.

sol^n:-

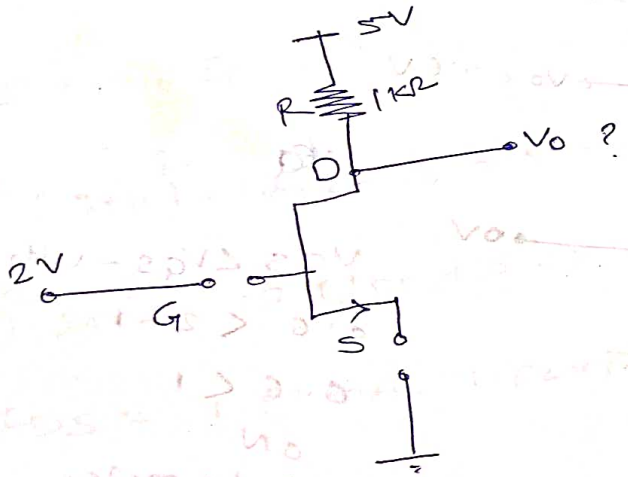

$(2V - 0V) > 1$

ON

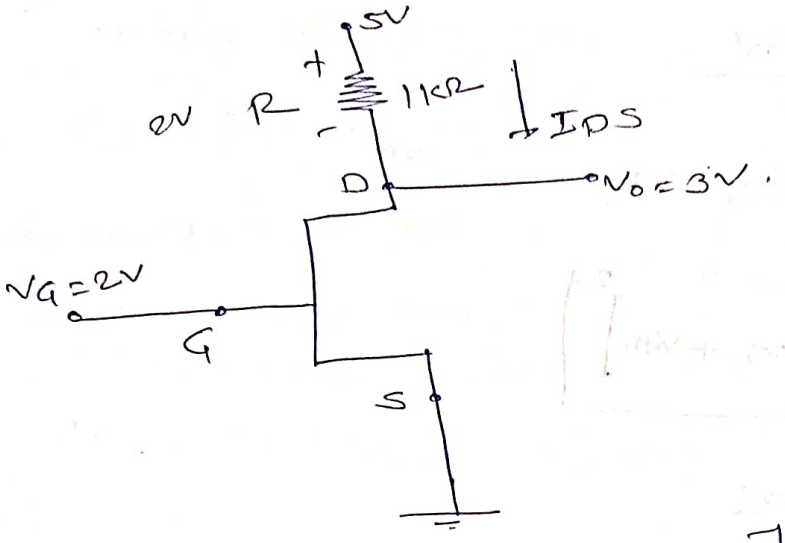

$$I_{DS} = K_n\left[V_{GS} - V_{th}\right]^2 = 2\left[2-1\right]^2$$

$$= 2\left[1\right]$$

$$= 2mA.$$

$V_D = 3V$, $V_S = 0V$

$V_{GG} = 2V$

$V_{DS} = 3V$, $V_{GS} = 2V$

$V_{GS} - V_{th} = 1V.$

Now $R = 2.2k\Omega$

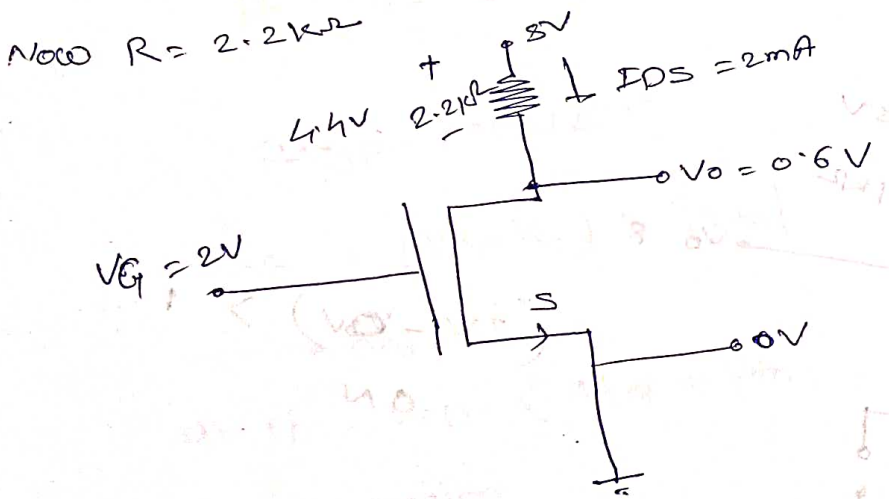

$V_{DS} < V_{GS} - V_{th}$

$0.6 < 2-1$

$0.6 < 1$

ON

Triode mode.

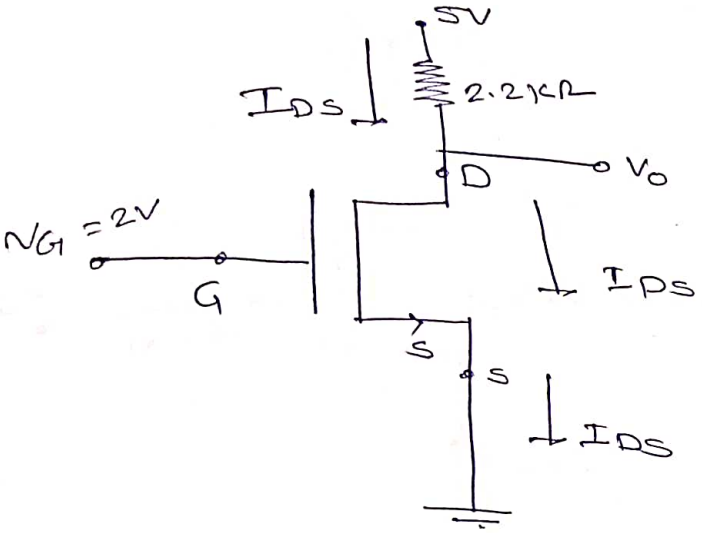

$$I_{DS} = k_n\left[2(V_G - V_{th})V_{DS} - V_{DS}^2\right]$$

$$= 2\left[2(2-1)\cdot(5-2I_{DS}) - (5-2.2I_{DS})^2\right]$$

$$\frac{I_{DS}}{2} = \left[2(5-2.2I_{DS}) - (5-2.2I_{DS})^2\right]$$

$$\frac{I_{DS}}{2} = \left[(5-2.2I_{DS})(2-5+2.2I_{DS})\right]$$

$$(5-2.2I_{DS})(-3+2.2I_{DS}) = 0.5I_{DS}$$

$$-15 + 17.6I_{DS} - (2.2)^2 I_{DS}^2 = 0.5I_{DS}$$

$$2.2^2(I_{DS})^2 - 17.1I_{DS} + 15 = 0.$$

$$(2.2)^2 I_{DS}^2 - 17I_{DS} + 15 = 0$$

$$I_{DS} = 1.91\,mA,\ 1.62\,mA.$$

$V_D = 5 - 2.2 I_{DS} = 0.798V$

$V_{DS} = 0.798$

$V_D = 1.436$

$V_{DS} = 1.436$

$\therefore I_{DS} = 1.91 mA$

$V_o = 0.798$ volt

→ max^m value of R for which, MOSFET will be in saturation region.

$I_{DS} = K_n (V_{GS} - V_{th})^2 = 2(2-1)^2 = 2mA.$

$V_D = 5 - 2.R$

$5 - 2R \geq V_{GS} - V_{th}$

$5 - 2R \geq (2-0) - 1$

$5 - 2R \geq 1$

$2R \leq 4$

$\boxed{R \leq 2K\Omega}$

2)

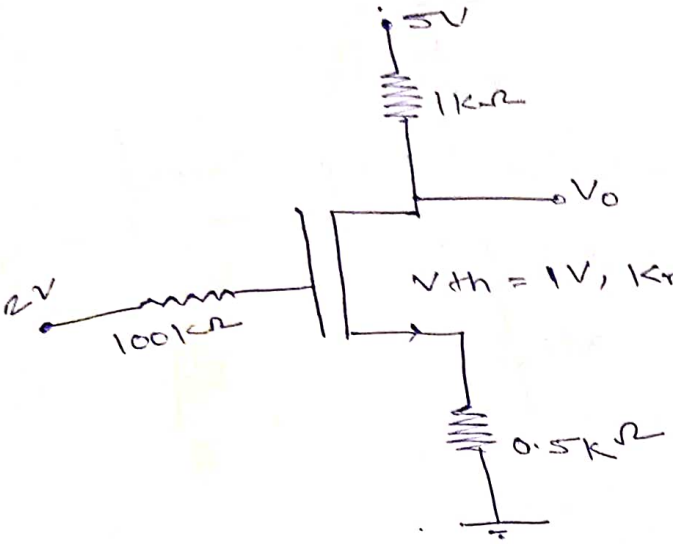

$V_{th} = 1V$, $K_n = \frac{\mu_n C_{ox} W}{2L} = 1 mA/V^2$

Sol:-

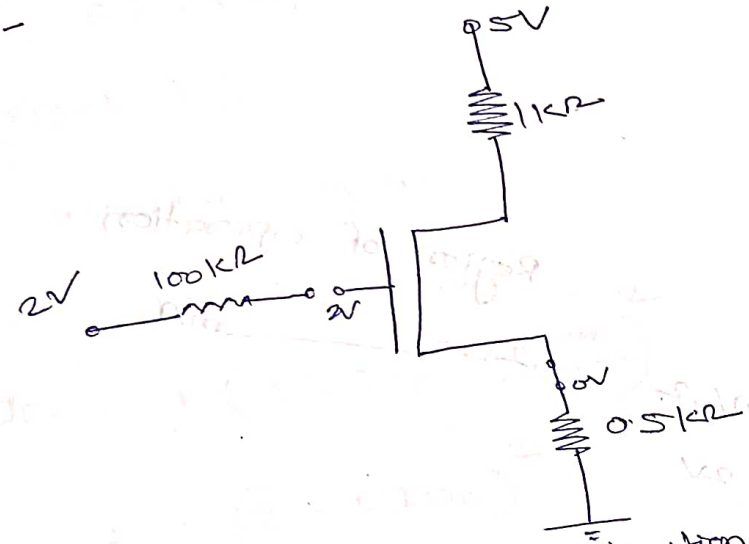

ON - saturation region मे मानना है।

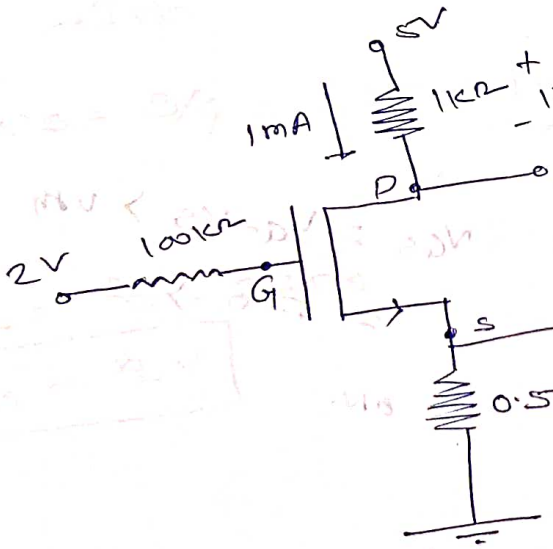

$I_{DS} = K_n [V_{GS} - V_{th}]^2$

$\cancel{= 1 [2-1]^2}$

$\cancel{I_{DS} = 1 mA}$

$V_G = 2V, \quad V_G = 0.5\, I_{DS}$

$V_{GS} = (2 - 0.5 I_{DS})$

$I_{DS} = 1\left[2 - 0.5 I_{DS} - 1\right]^2$

$I_{DS} = \left[1 - 0.5 I_{DS}\right]^2$

$0.25 I_{DS}^2 - 2 I_{DS} + 1 = 0$

$I_{DS} = 0.535, \; 7.47 mA.$ ✗

mA.

Lect-3

Q)

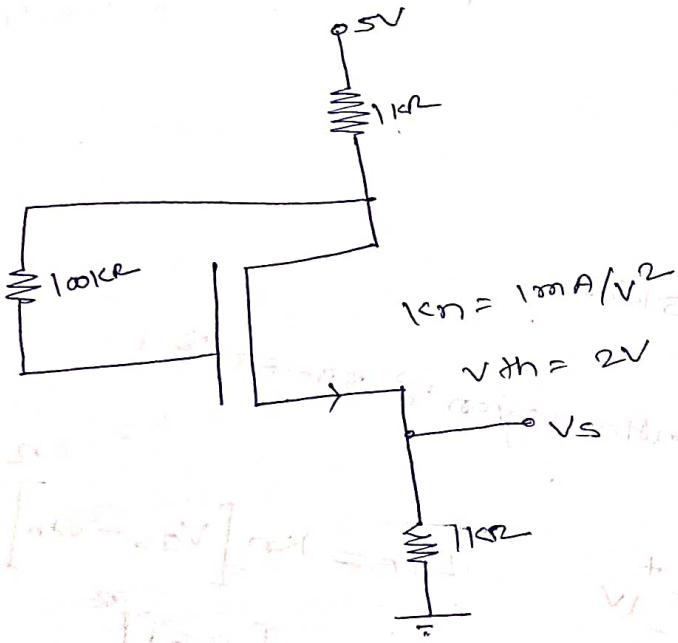

Region of operation

I_{DS} _____ mA.

Sol^n:-

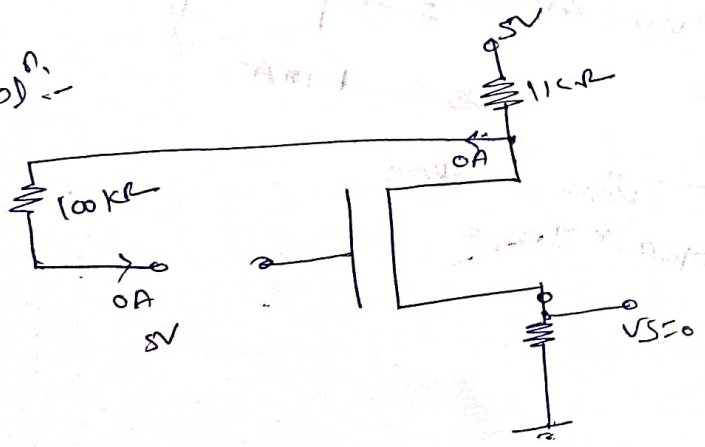

$V_{GS} = V_G - V_S > V_{th}$

$= 5 - 0 > 2$

ON.

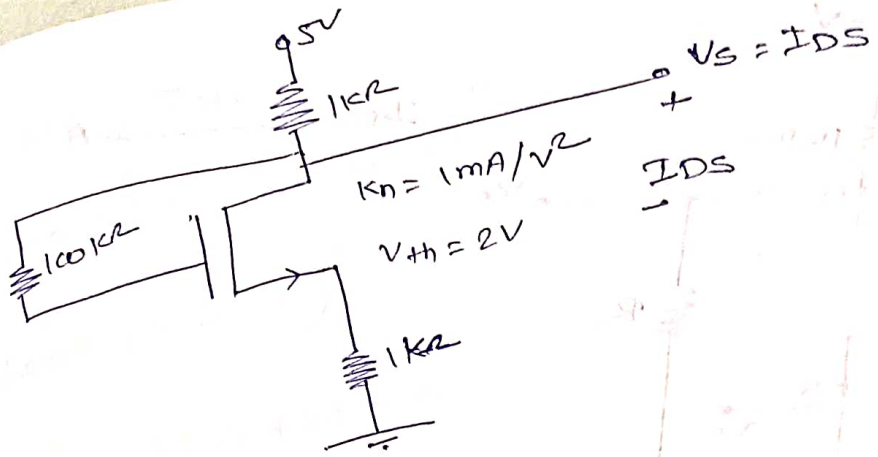

$V_{DS} \geq V_{GS} - V_{th}$

$0 > -V_{th}$

$(V_D - V_S)$

saturation region

$I_{DS} = K_n (V_{GS} - V_{th})^2$

$I_{DS} = 1 (5 - I_{DS} - I_{DS} - 2)^2$

$= (3 - 2I_{DS})^2$

$= 4I_{DS}^2 - 13I_{DS} + 9 = 0$

$I_{DS} = 9/4 = 2.25$ ✗, 1mA ✓

$V_{GS} = 5 - 2I_{DS}$

$\boxed{V_{GS} = 3V}$

Q)

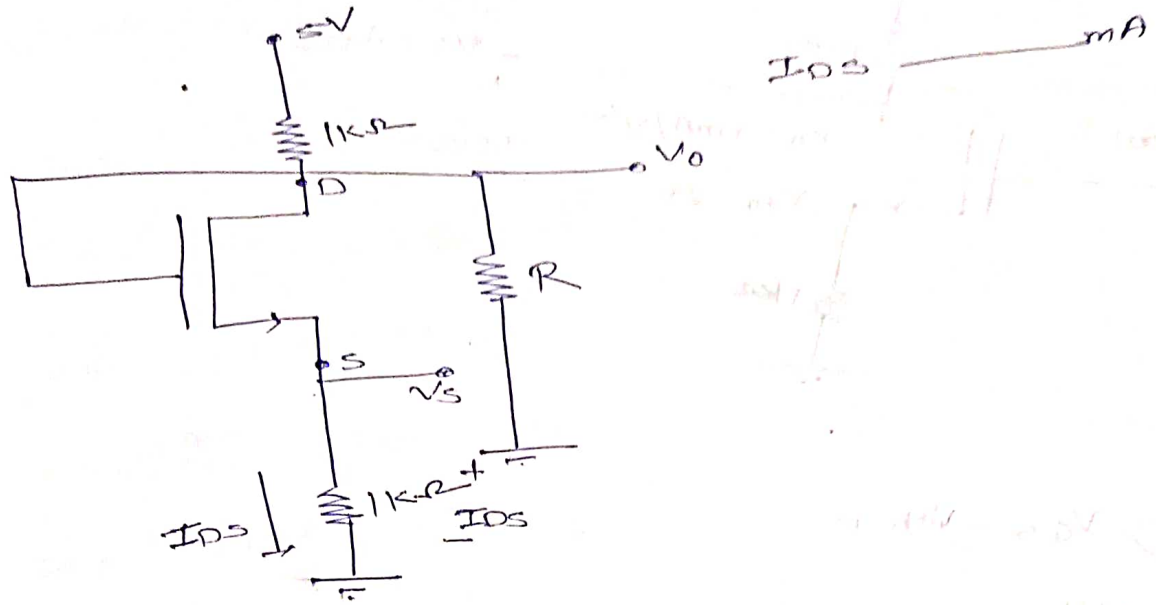

i) $R = 1K\Omega$

$K_n = 1mA/V^2$

$V_{th} = 1V$

ii) $R = 0.5K\Omega$

$V_{th} = 2V$

$K_n = 1mA/V^2$

Sol^n:- ①

MOSFET is ON

and it in saturation region

$$I_{DS} = K_n[V_{DS} - V_{th}]^2 = 1[V_o - I_{DS} - 1]^2$$

$$\frac{5 - V_o}{1} = I_{DS} + \frac{V_o - 0}{1}$$

$$5 - 2V_0 = I_{DS}$$

$$5 - 2V_0 = \left[V_0 - 5 + 2V_0 - 1\right]^2$$

$$0 = (3V_0 - 6)^2$$

$$9V_0^2 - 34V_0 + 31 = 0$$

$$V_0 = \frac{17 + \sqrt{10}}{9}, \quad \frac{17 - \sqrt{10}}{9}$$

$$I_{DS} = 2.24, 1.537$$

$$V_{GS} = V_0 - I_{DS}$$

$$= \frac{5 - I_{DS}}{2} - I_{DS}$$

$$= 2.5 - \frac{3}{2} I_{DS}$$

Lect-4

R ——— KΩ

Goe Q)

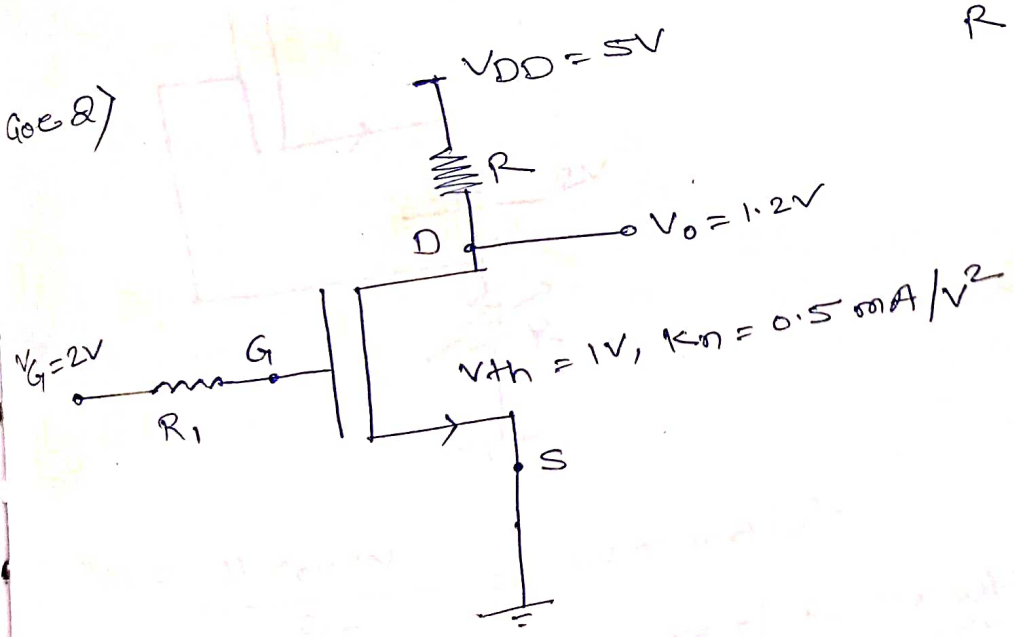

Sol:-

$V_D = 1.2V$

$V_G = 2V$

$V_{DS} > V_{GS} - V_{th}$

$V_D - V_G$

$-0.8 > -1$

$I_{DS} = 0.5(2-1)^2 = 0.5mA$

$I_{DS} = \frac{5-1.2}{R}$

$0.5 = \frac{5-1.2}{R}$

$R = \frac{3.6}{0.5} = 7.6k\Omega$

If $V_o = 0.8V$

$R = ?$

$V_D = 0.8V$

$V_G = 2V$

$V_D - V_G \qquad - V_{th}$

$-1.2\,V \quad < \quad -1\,V$

$$I_{DS} = 0.5\left[2(2-1)0.8 - (0.8)^2\right]$$

$$= 0.5\left[1.6 - 0.64\right]$$

$$I_{DS} = 0.48\ mA$$

$$\frac{5 - 0.8}{R} = 0.48$$

$$\boxed{R = \frac{4.2}{0.48} = 8.75\,K\Omega}$$

Q)

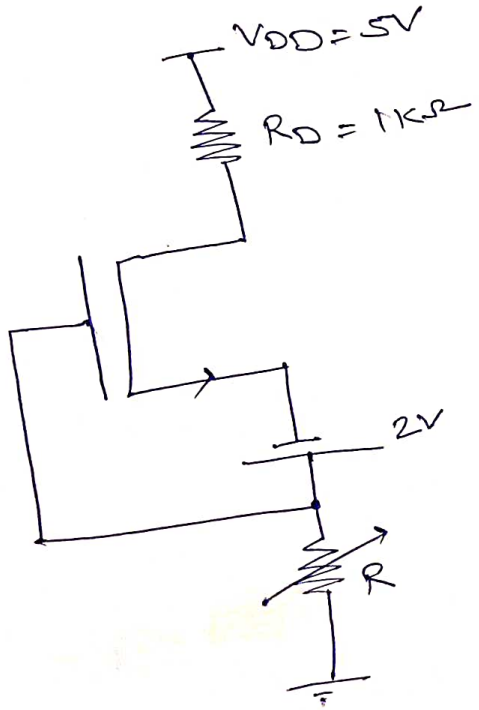

$$K_n = \frac{\mu C_{ox} W}{2L} = 1.25\ mA/V^2$$

$V_{TN} = 1.2V$, max value of R for which MOSFET will remain in saturation region.