BJT

npn pnp

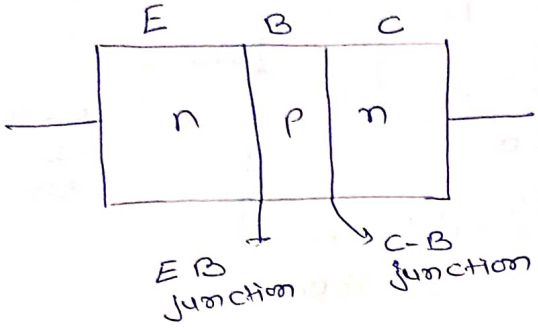

1) In an BJT there are two p-n junctions EB & C-B junction

2) E & C are always have different dopings and emmiter doping is always having higher doping compare to collector.

3) Emitter injects charge carrier into the base and the charge carrier which are not recombined into base region are collected at collector end.

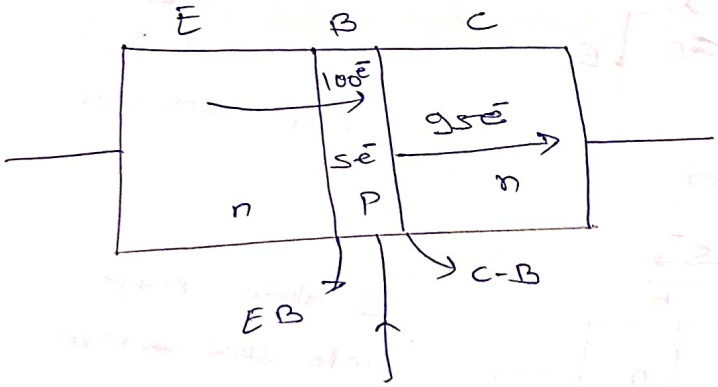

Current Equation of BJT

Saturation, Cutoff } switch

Active region → as an Amplifire.

E - B → EB- CB → RB-

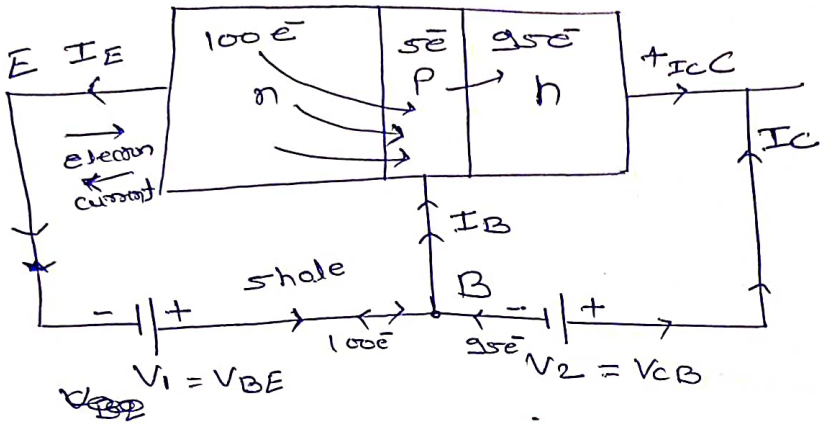

$$\boxed{I_E = I_B + I_C}$$

always true
always valid
in sat. as well as
in active

5 e^- hole → recombine

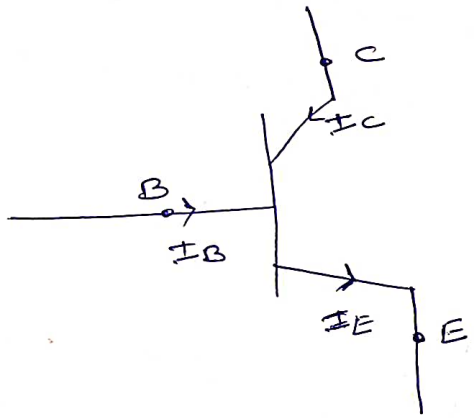

npn transistor

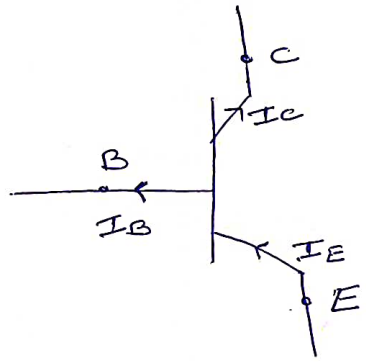

pnp transistor

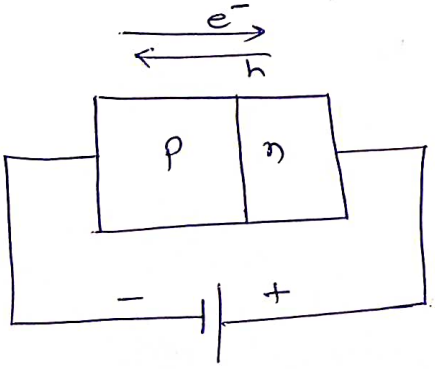

e^- allow n→p

hole allow p→n

EB	CB	
FB	RB	→ Active region
FB	FB	→ saturation region
RB	RB	→ cutoff
RB	FB	→ reverse active region

we normally never use this

E.g:-

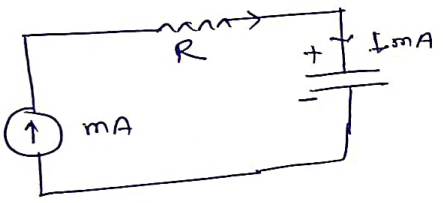

How to utilise resource?

→ concept
→ process (step)
→ efficient
→ PYQ
→ Try & Try

Current gains $\rightarrow \alpha, \beta, \gamma$

(only in active region) $\boxed{I_E = I_B + I_C}$

$$\alpha = \frac{I_C}{I_E} = \frac{I_C}{I_B + I_C}$$

$\alpha \not> 1$
and very near to 1 in general.

Common base current gain

$$\beta = \frac{I_C}{I_B}$$

$I_C >> I_B$
ie $\beta >> 1$

$$= \frac{I_C}{I_E - I_C}$$

$$\beta = \frac{I_C / I_E}{1 - \frac{I_C}{I_E}} = \left(\frac{\alpha}{1-\alpha}\right)$$

e.g.:-

i) $\alpha = 0.99$

$$\beta = \frac{0.99}{1 - 0.99} = 99$$

ii) $\alpha = 0.98$

$$\beta = \frac{0.98}{1 - 98} = 49.$$

$$\gamma = \frac{I_E}{I_B}$$

Common collector gain

$$= \frac{I_C + I_B}{I_B}$$

$$= \frac{\left(\frac{I_C}{I_B} + 1\right) \cancel{I_B}}{\cancel{I_B}}$$

$$\boxed{\gamma = \beta + 1}$$

Note:-

1) If any current gain increases then other current gains will also increase & vice verse.

2) for small change in α gain the β change is very large.

3) These all current gain relation will be valid only only in active region

npn - Transistor

Collector current

$$I_C = I_S e^{V_{BE}/V_T}$$ for npn transistor

where $V_{BE} = (V_B - V_E)$ ⟶ +ve for npn

I_S ⟶ reverse saturation current of EB junction

$$I_S = qA \frac{D_n}{W} n_p$$

W → effective base width

D_n → Diffusion constant for e^-

n_p → e^- concentration in base region

$$I_B = \frac{I_C}{\beta} = \frac{I_S e^{V_{BE}/V_T}}{\beta}$$

$$I_E = \frac{I_C}{\alpha} = \frac{I_S e^{V_{BE}/V_T}}{\alpha}$$

Emitter, Base & collector		Junction EB	Junction CB
ON	Active	FB	RB
ON	saturation	FB	FB
off → Cutoff		RB	RB

npn Si → $(V_{BE})_{active}$ = 0.7 volt

pnp $(V_{EB})_{active}$ = 0.7 volt

npn Ge → $(V_{BE})_{active}$ = 0.2 V

pnp Ge → $(V_{EB})_{active}$ = 0.2 V

Eg:- in saturation

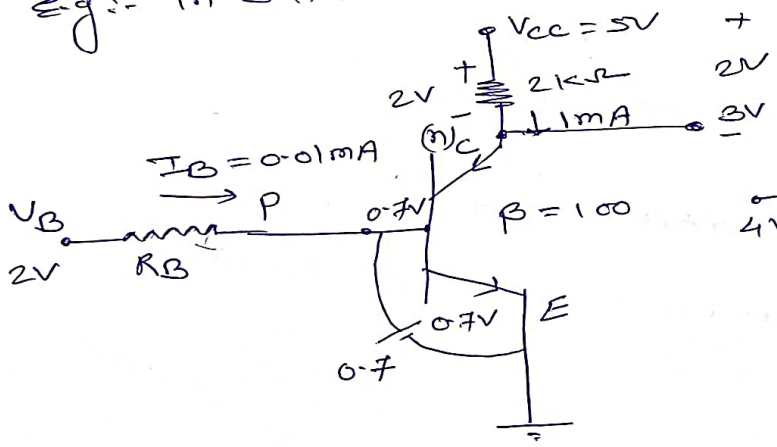

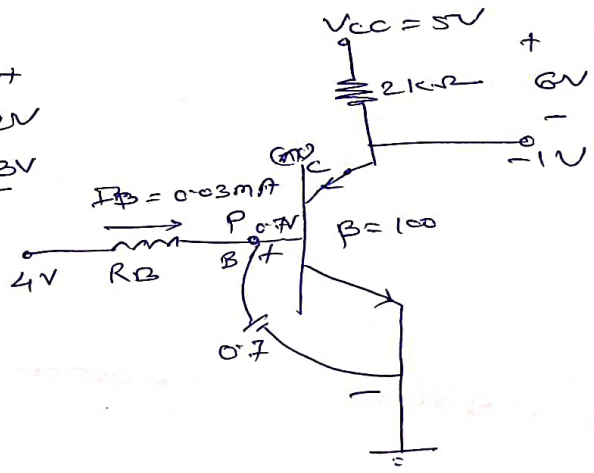

in active Now

$I_E = I_B + I_C$ (sat)

I_C vs. I_B

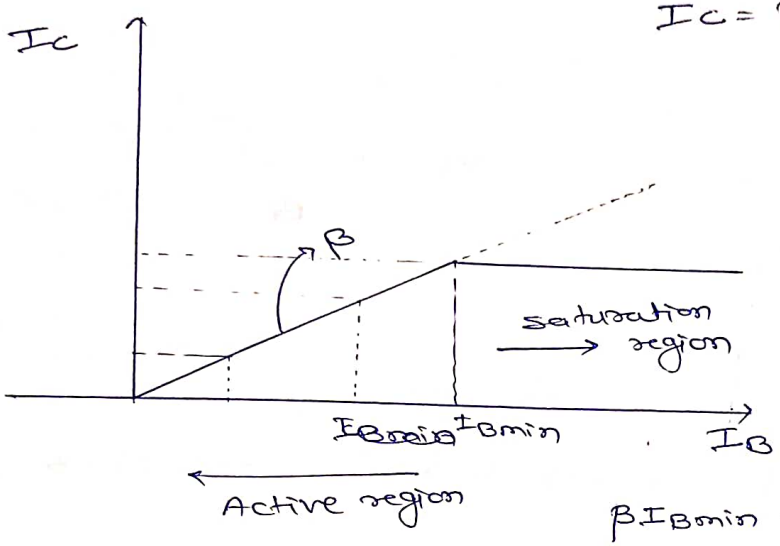

$I_C = \beta I_B$

$\underbrace{I_B \geq I_{Bmin}}_{\text{saturation}}$

$\beta I_{Bmin} = I_{C\,sat}$

$I_{Bmin} = \dfrac{I_{C\,sat}}{\beta}$

Imp

$$\boxed{I_B \geq \frac{I_{C\,sat}}{\beta}}$$

e.g:-

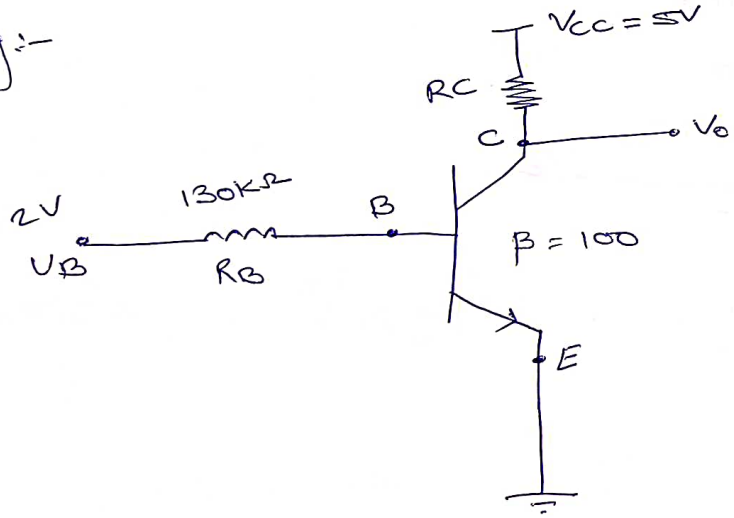

Q) $R_C = 2.5\,K\Omega$, then
(I_C, V_o)
& region of operation
(I_C, V_{CE})

$(V_{BE})_{active} = 0.7$ Volt

$(V_{CE})_{sat} = 0.2$ Volt

Step 1)

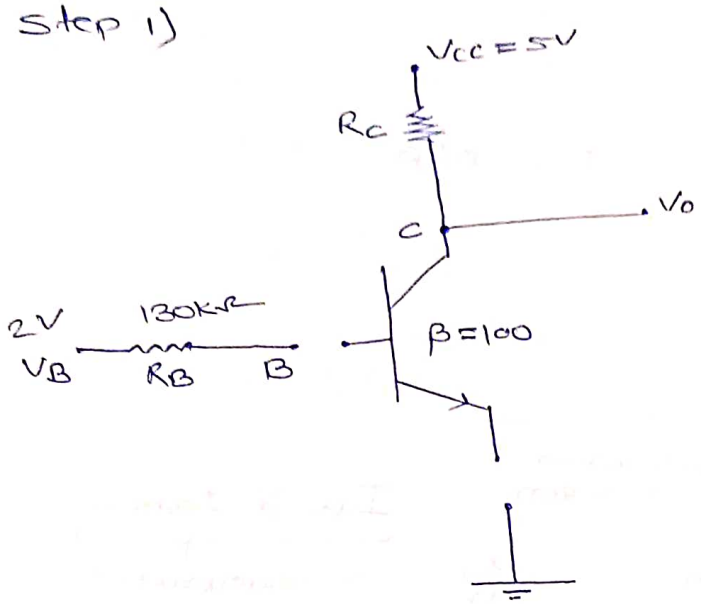

$V_p - V_n = 3V$

F.B

O.C. test to check $V_p > V_n$ then its F.B

Step 2)

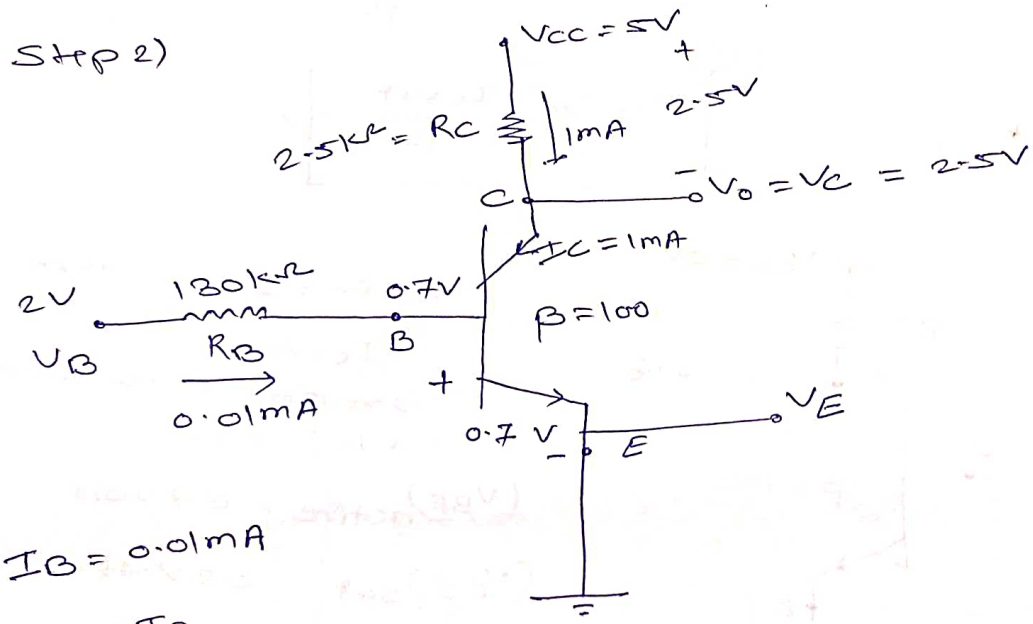

$I_B = 0.01mA$

$I_c = \beta I_B$

$\boxed{I_c = 1mA}$

$\boxed{I_E = I_c + I_B} = (\beta+1) I_B$

$V_{CE} \geq 0.2V$

$V_{CE} \geq (V_{CE})_{sat}$

$\therefore \quad V_{CE} = 2.5 \text{ Volt}$

$V_{CE} > 0.2V$

$$\boxed{I_C = 1mA, \; V_{CE} = 2.5V}$$

B) $R_C = 5k\Omega$, (I_C, V_{CE})

$(V_{BE})_{active} = 0.7V$

$(V_{CE})_{sat} = 0.2V$

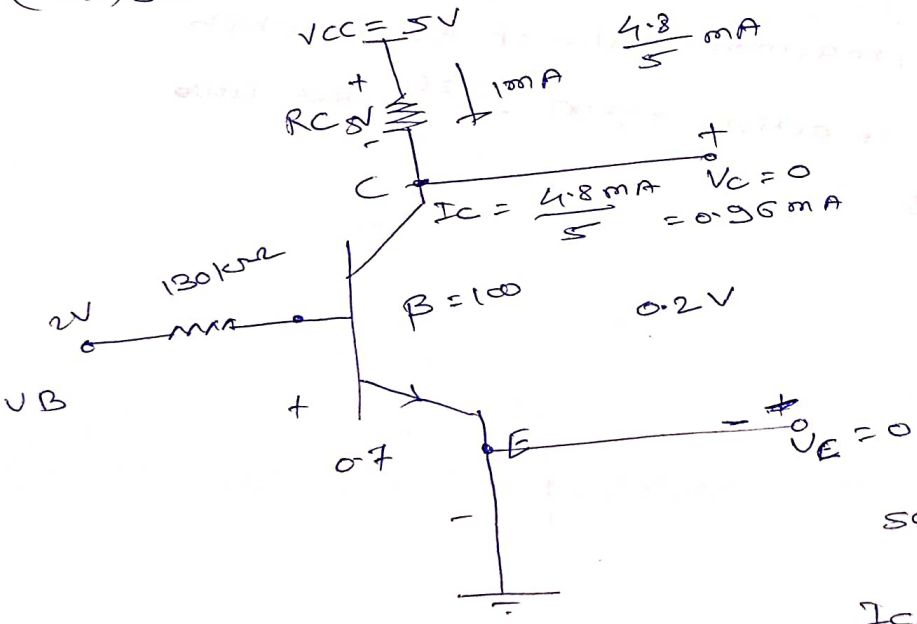

BJT in saturation region

saturation → $I_{Bmin} = 0.0096$

$0.01 > 0.0096$

$I_{Csat} = 0.96mA$

$I_B = 0.01mA$

$I = 0.97mA$.

1.40

Q)

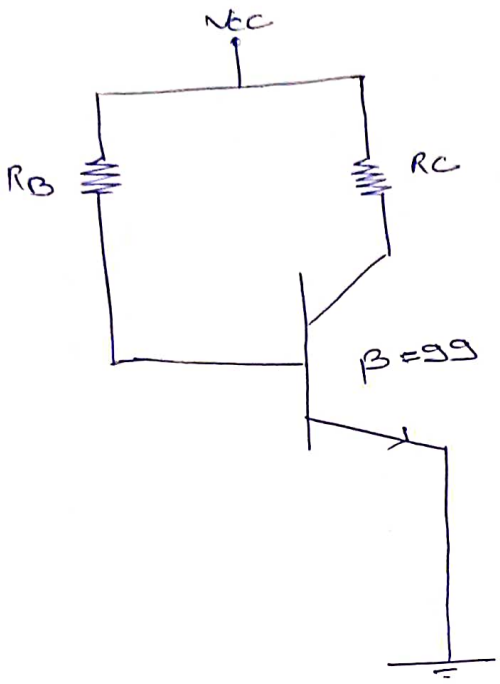

a) $V_{CC} = 5V$, $R_C = 2k\Omega$

$(V_{BE})_{active} = 0.7$ volt

$(V_{CE}) = 0.2$ volt

then the minimum value of R_B ($k\Omega$) for which BJT will be in active region 177.36 $k\Omega$. upto two decimal.

b) $R_B = 200k\Omega$, $V_{CC} = 5V$, $(V_{BE})_{active} = 0.7V$, $V_{CE(sat)} = 0.2$, maximum value of R_C for which BJT will be in active region 2.26 $k\Omega$. upto two decimal.

Soln:-

a) $V_C = \dfrac{5 - I_C R_C}{5 - \beta I_B R_C}$

Q)

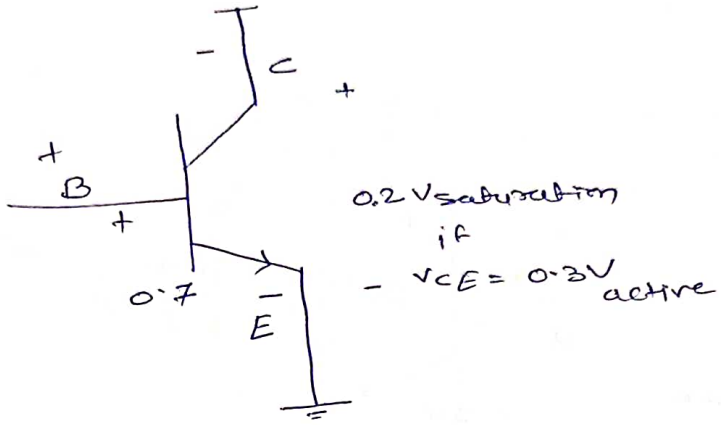

$V_{BE} = 0.7V$

$V_B - V_E = 0.7V$

$V_{CE} = 0.2V, = 0.3V$

$V_C - V_E = 0.2V, = 0.3V$

$V_B - V_C = 0.5V, \Rightarrow 0.4V$ (Reverse Bias))

$V_{BC} = 0.5V, \Rightarrow 0.4V$ (RB)

Q)

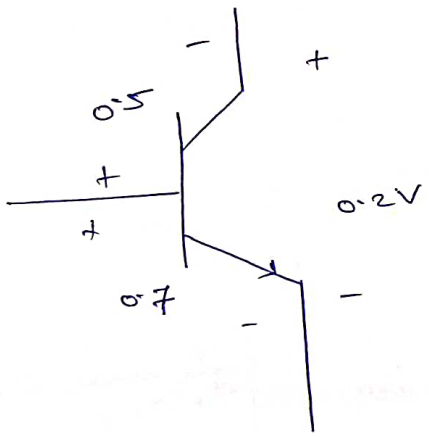

Q)

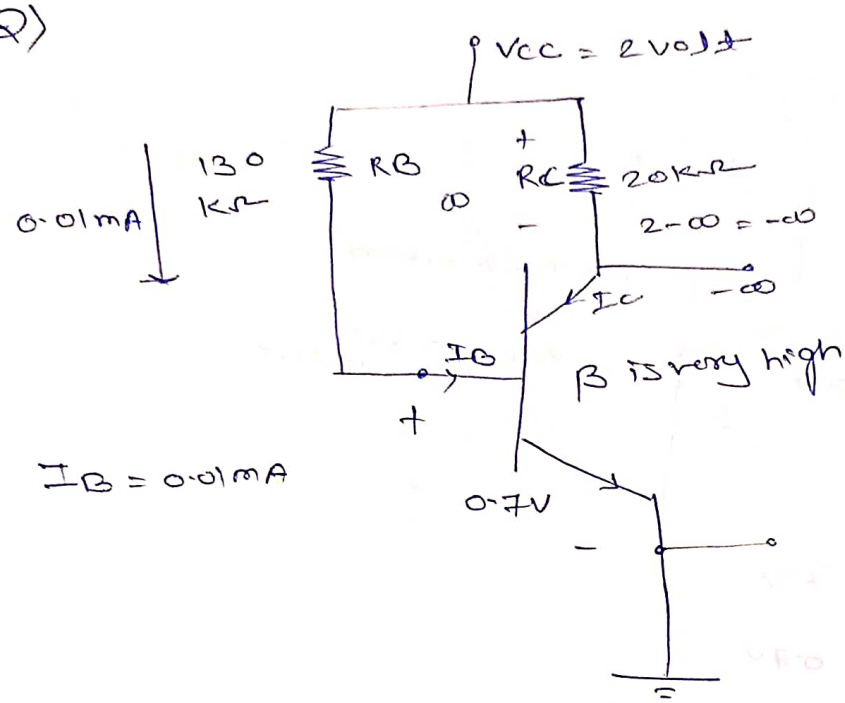

$(V_{BE})_{active} = 0.7$ volt

$(V_{CE})_{sat} = 0.2$ volt

value of $(I_B + I_C)$

100.00 μA

upto two decimal.

Soln:-

$I_B = \frac{I_C}{\beta}$ → in active region

$I_B \to 0$

$\boxed{I_C = \beta \cdot I_B}$

Step ① oc test

$V_p > V_n$ → ON

Step ② consider active region

$V_B - V_E = 0.7V$

$I_C - \beta I_B = \infty$ $\quad \because \beta = \infty$

$\boxed{I_C = \infty}$

(3) saturation region

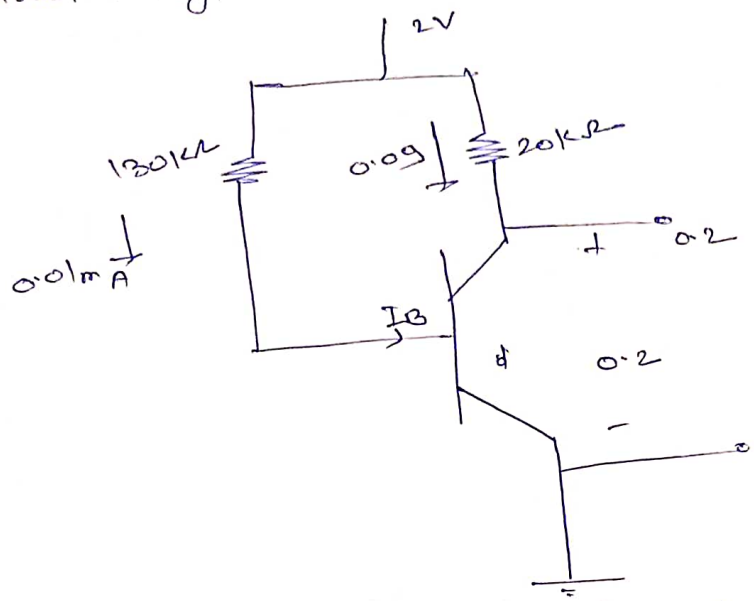

$I_{B\,min} = 0$

$I_B > I_{B\,min} \rightarrow$ saturation

$I_B = 0.01\,mA$

$I_{C\,sat} = 0.09$

$I_B + I_C = 0.01\,mA + 0.09\,mA$

$= 100\,\mu A.$

Q)

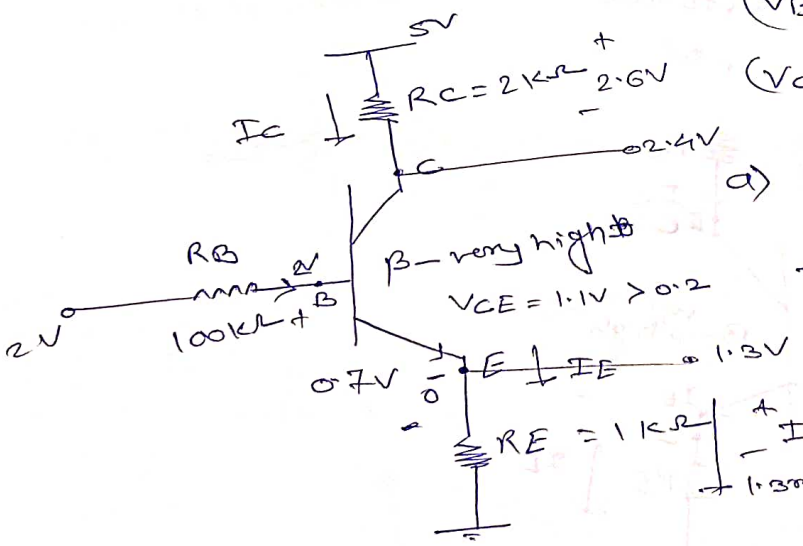

$(V_{BE})_{active} = 0.7V$

$(V_{CB})_{sat} = 0.2$

a) $R_B = 100K\Omega$, $R_E = 1K\Omega$, $R_C = 2K\Omega$

I_C, I_B, I_E ?

① $2 - 0 = V_P > V_n$

active region

$V_{BE} = 0.7\,V$

② Active region

$V_{BE} = 0.7\,V$

$\beta \rightarrow$ very high

$I_B \rightarrow 0$

③ $I_E = 1.3\,mA$

$I_C = 1.3\,mA.$

$I_E = I_B + I_C$

$\boxed{I_E = I_C}$

$V_{CE} = 1.1\,V > 0.2\,V.$

$I_C = 1.3$, $I_E = 1.3$, $I_B = 0$

ⓑ $R_B = 20\,k\Omega$, $R_C = 3\,k\Omega$, $R_E = 1\,k\Omega$

I_B, I_C, I_E, upto two decimal.

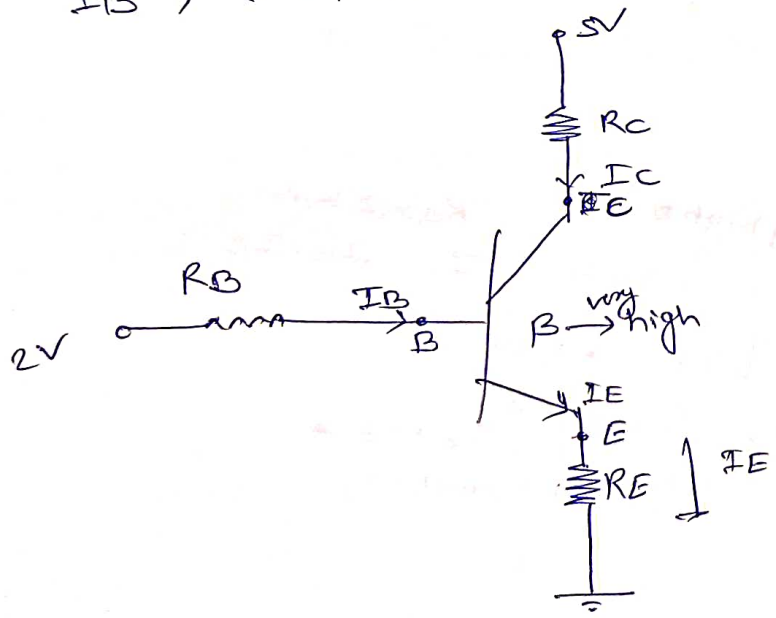

① active region

$I_B = 0.1\,mA$

$\beta = \frac{I_C}{I_B} \Rightarrow I_B = \frac{I_C}{\beta}$

$\beta \rightarrow$ very high

$I_B \rightarrow 0$

$0 = \frac{I_C}{\beta}$

$\beta = \frac{I_C}{0}$

$\beta = \infty$

~~$I_C = \beta \times I_B$~~

~~$I_C = 0$~~ $I_B = 0$

$I_E = I_B + I_C$

$\boxed{I_E = I_C}$

$V_{CE} > 0.2$ (saturation)

$V_{CE} = -0.2$

~~$V_{CE} =$~~ BJT is in saturation region

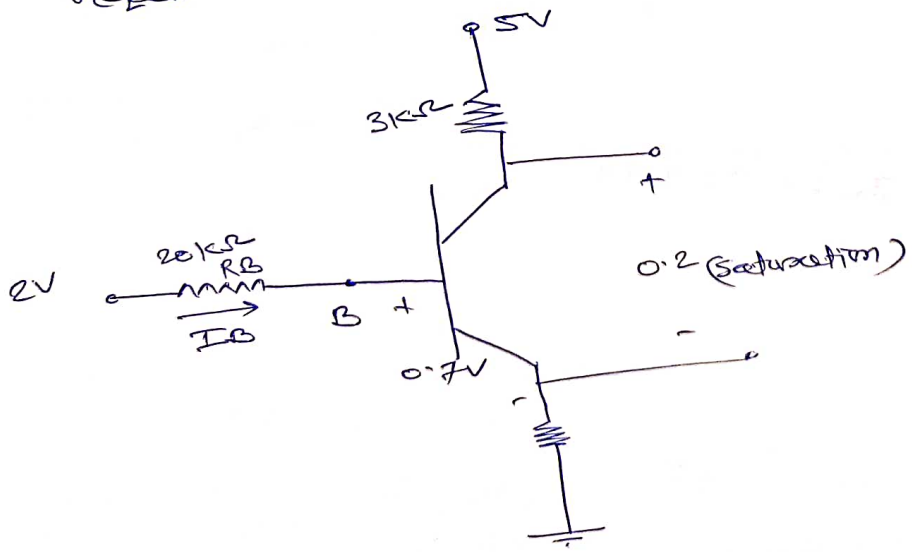

Apply KVL in ABE

$$-100 + 5I_B + 0.7 + 0.7 = 0$$

$$\Rightarrow I_B = \frac{100 - 0.7 - 0.7}{5} = 19.1\,mA$$

$$I_C = \beta I_B = 100 \times 19.1 = 1910\,mA$$

$$\text{Apply KVL in BCE} \quad -0.7 - 5I_B + 5I_C + 0.7 = 0$$

$$\Rightarrow 5I_C = 5I_B \quad \Rightarrow I_C = I_B$$

$$\Rightarrow I_C = 19.1\,mA \quad \text{--- (1)}$$

$$\text{Apply KVL in CDE} \quad -5I_C - 0.7 - 5I_E + 0.7 = 0$$

$$\Rightarrow 5I_E = -5I_C \quad \Rightarrow I_E = -I_C$$

$$\Rightarrow I_E = -19.1\,mA \quad \text{--- (2)}$$

$$(1) \times 5 \Rightarrow 5I_C = 95.5$$

$$(2) \times 5 \Rightarrow 5I_E = -95.5$$

$$5I_B + 5I_C = 100$$

$$\Rightarrow 5I_B + 5 \times 19.1 = 100$$

$$\Rightarrow 5I_B = 4.45$$

$$I_B = \frac{4.45}{5} \Rightarrow I_B = 0.89\,mA$$

$$I_B = 0.89\,mA$$

$$I_E = I_B + I_C$$

$$\boxed{I_E = 19.99\,mA}$$

Q)

max. value of Rc for which BJT will be in active region ——— (kΩ) upto two decimal

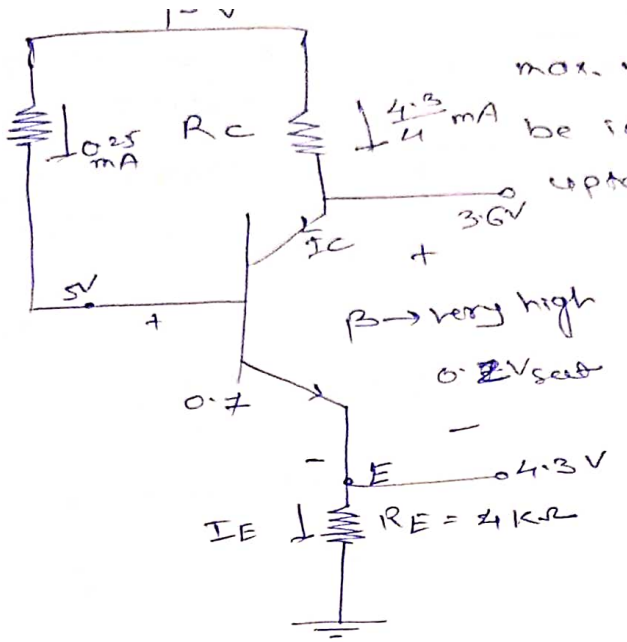

soln:-

① oc test - ON (VPN)

⇒ active region

②

$I_E = I_B + I_C$

Apply KVL B.BE

~~$5 - (20k \times 0.25) - 0.7 - I_E \times 4k = 0$~~

~~$-0.7 - I_E \times 4000 = 0$~~

~~$\frac{-0.7}{4000} = I_E$~~

$5 - 0.7 = 4.3V$

$I_E = \frac{4.3}{4k} = 1.075 mA$

$\boxed{I_E = I_C}$

$\beta = \frac{I_C}{I_B}$ $\quad I_B = 0$ $\quad \beta = \infty$

$\therefore I_E = I_C = 1.075 mA$.

$$V_{CE} = 5 - \frac{4.3}{4} R_c - 4.3$$

$$= 0.7 - \frac{4.3}{4} R_c$$

$$0.7 - \frac{4.3}{4} R_c \geq 0.2$$

$$0.5 \geq \frac{4.3}{4} R_c$$

$$R_c \leq \frac{0.5(4)}{4.3}$$

$$R_c \leq 0.465$$

$$\boxed{R_c = 0.47\,k\Omega}$$

Q)

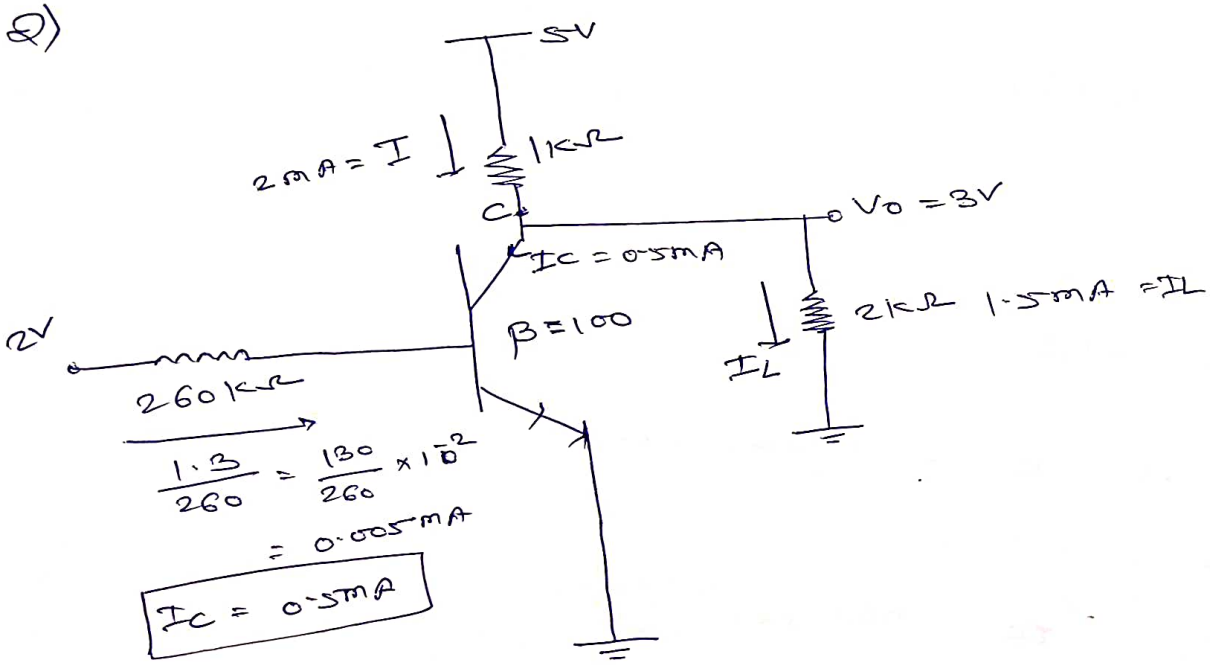

$(V_{BE})_{active} = 0.7V$

$(V_{CE})_{sat} = 0.2V$

V_o _____ volt upto two decimal

I_c _____ mA upto two decimal

I_L _____ mA upto two decimal.

Soln:- $V_p > V_n \Rightarrow 2 > 0$

active region

$(V_{BE})_{active} = 0.7V$

$I = I_L + I_C$

$$\frac{5 - V_o}{1} = \frac{V_o - 0}{2} + 0.5$$

$10 - 2V_o = V_o + 1$

$3V_o = 9$

$\boxed{V_o = 3V}$

Q)

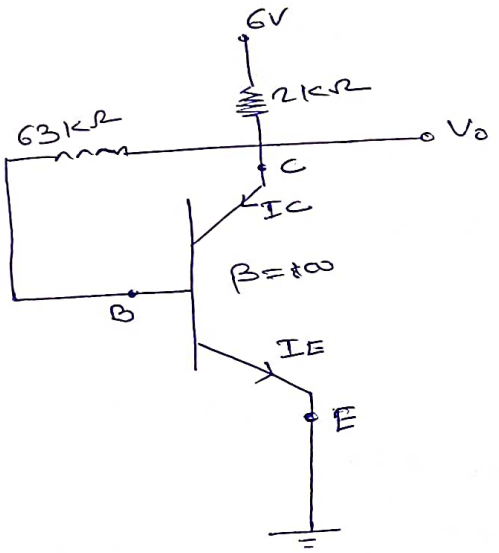

$V_{BE} = 0.7$ volt

$(V_{BE})_{sat} = 0.2$ volt

V_o : _____ volt upto two decimal

I_C _____ mA.

(a) $\beta = \infty$

(b) $\beta = 100$

Soln:-

$$\frac{6V - V_o}{2000} = I$$

$\beta = 100$

$\beta = \frac{I_C}{I_B}$ $\boxed{I_B \beta = I_C}$

$I_B = 0$, $I_C = 0$, $I_B = 0$

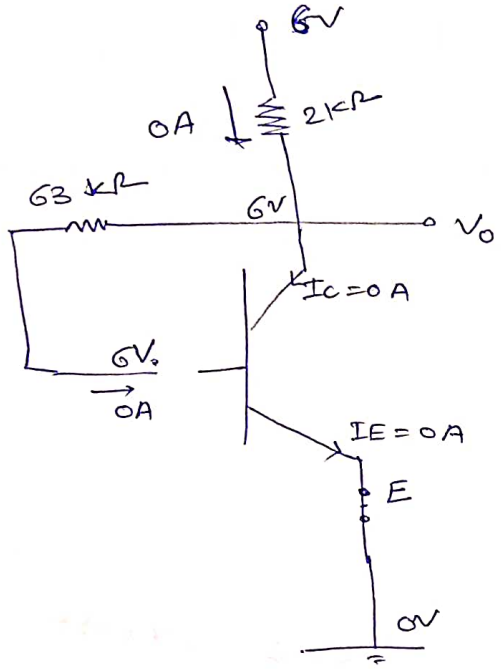

$V_p \rightarrow V_n \geq V_{active}$

$V_{BE} < 6$ transistor is ON

② on active region

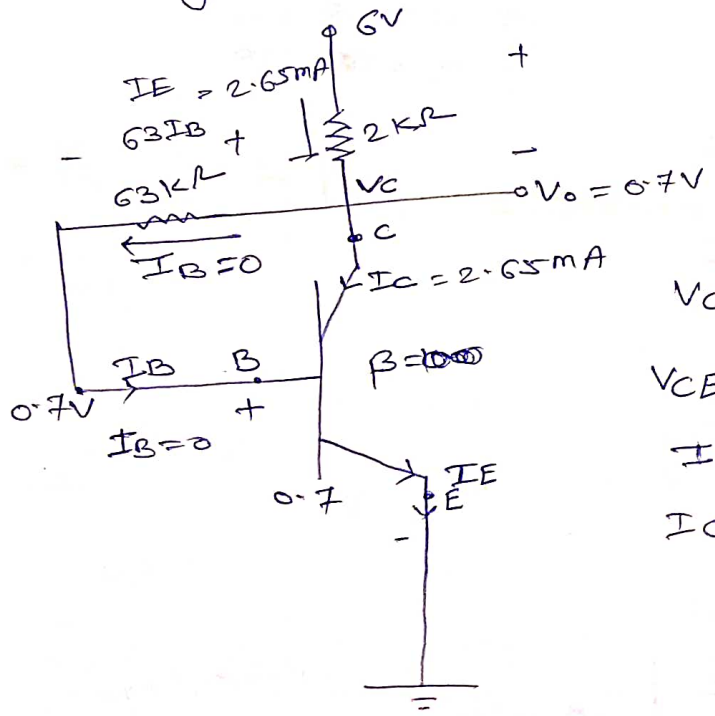

$V_C = V_o$

$V_C = 0.7 + 63 I_B$

$V_{CE} = 0.7 + 63 I_B$

$I_B \rightarrow 0$

$I_C \simeq I_E$.

$V_o = 0.7$V

$I_C = 2.65$

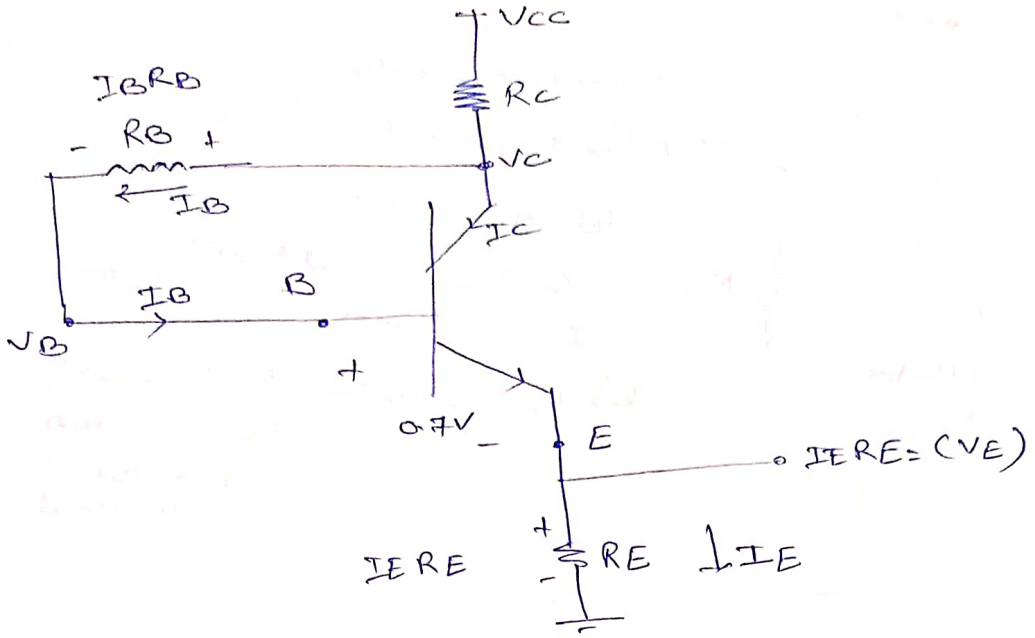

$$V_E = I_E R_E$$

$$V_B = 0.7 + I_E R_E$$

$$V_C = V_B + I_B R_B$$

$$= 0.7 + I_B R_B + I_E R_E$$

$$V_{CE} = 0.7 + I_B R_B$$

(B) $\beta = 100$

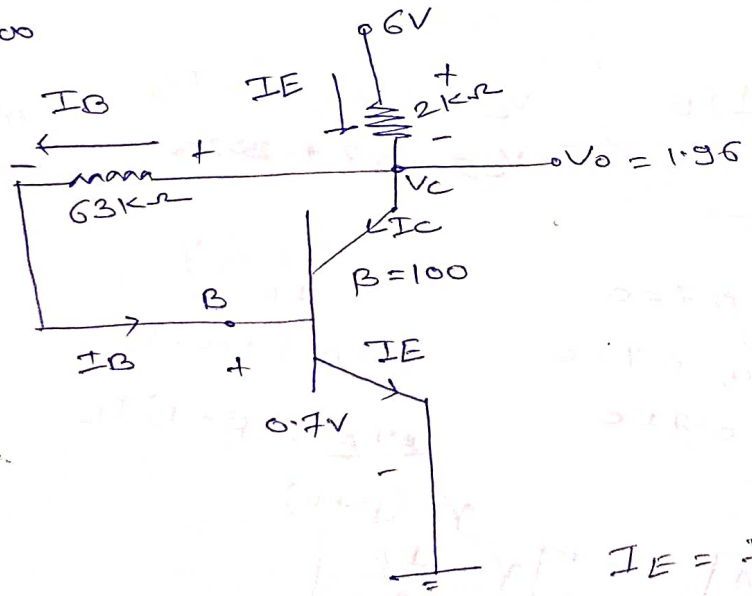

$$6 - 2I_E - I_B \times 63 - 0.7 = 0$$

$$6 - 2 \times 100 I_B - 63 I_B - 0.7 = 0$$

$$265 I_B = 5.3$$

$$I_B = \frac{5.3}{265} = 0.02\,mA$$

$$I_C = 2\,mA$$

$$I_E = 2.02\,mA$$

$$I_E = I_B + I_C$$

Q)

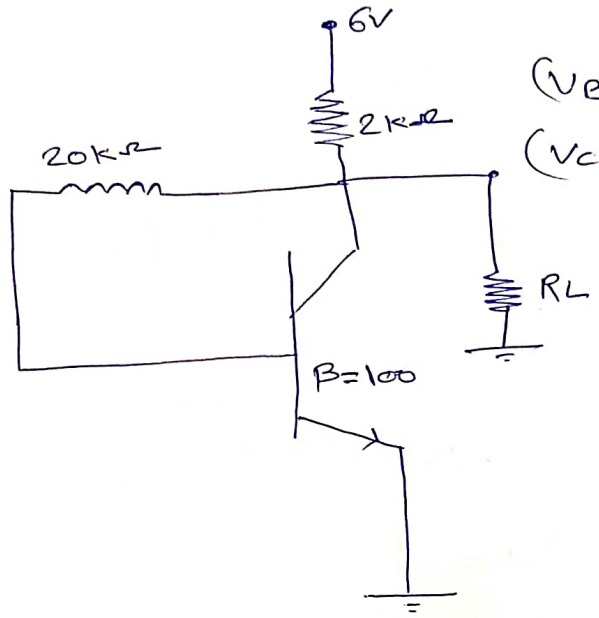

$(V_{BE})_{active} = 0.7V$

$(V_{CE})_{sat} = 0.2V$

ⓐ $R_L = 1k\Omega$

$V_o =$ ____ volt upto two decimal

$I_C =$ ____ mA

b) $R_L = 200\Omega$, $V_o =$ ____ V

I_C ____ mA

upto two decimal.

Sol^n:-

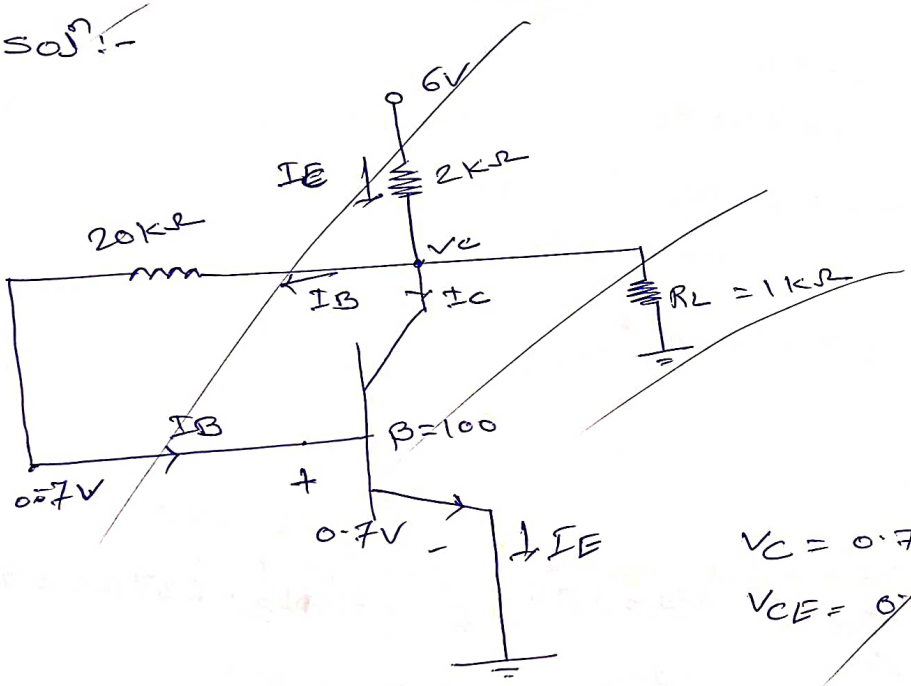

$V_C = 0.7 + 20k\, I_B$

$V_{CE} = 0.7 + 20 I_B$

$\frac{I_E}{I_B} = \gamma$

$6V - 2I_E - 20 I_B - 0.7 = 0$

$6 - 2(101) I_B - 20 I_B - 0.7 = 0$

$6 - 202 I_B - 20 I_B - 0.7 = 0$

$\frac{6 - 0.7}{222} = I_B$

$\boxed{I_B = 0.02 mA}$

$\beta I_B = 100 \times I_B$

$I_E = (\beta + 1) I_B$

$\gamma = (\beta + 1)$

$\boxed{\gamma = \frac{I_E}{I_B}}$

$I_E = I_C + I_B$

$(\beta + 1) I_B - I_B = I_C$

$(101) \times 0.02 - 0.02 = I_C$

$I_C = 2\,mA$

$I_E = 2 + 0.02$

$\boxed{I_E = 2.02\,mA}$

Soln:-

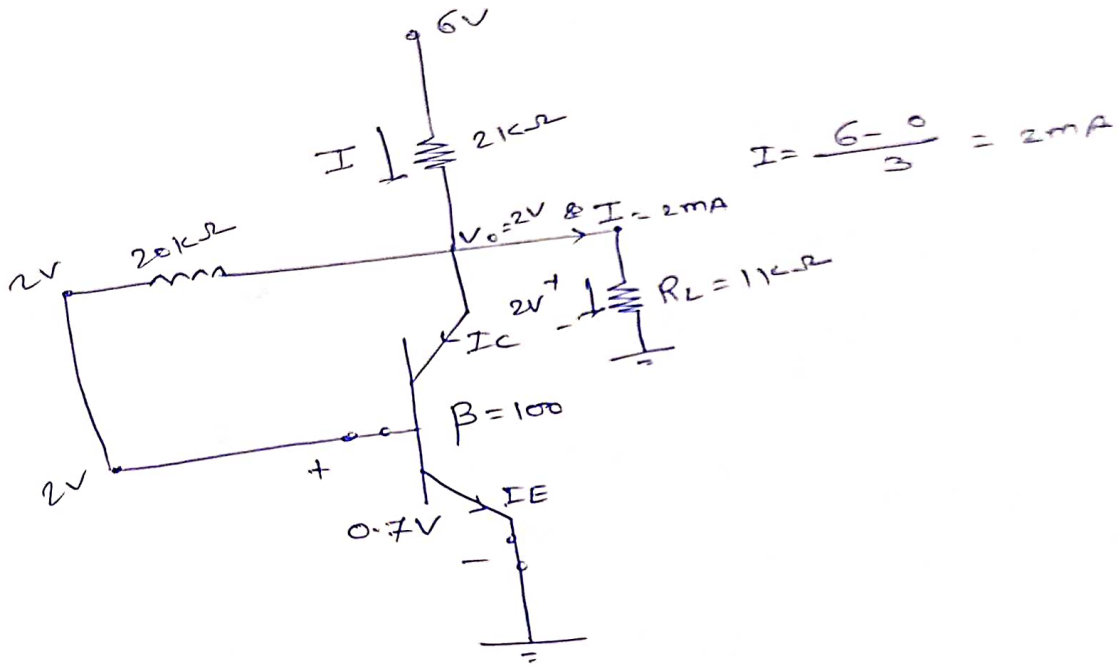

$V_P > V_n$

$2V > 0V.$

Bjt is ON

active region.

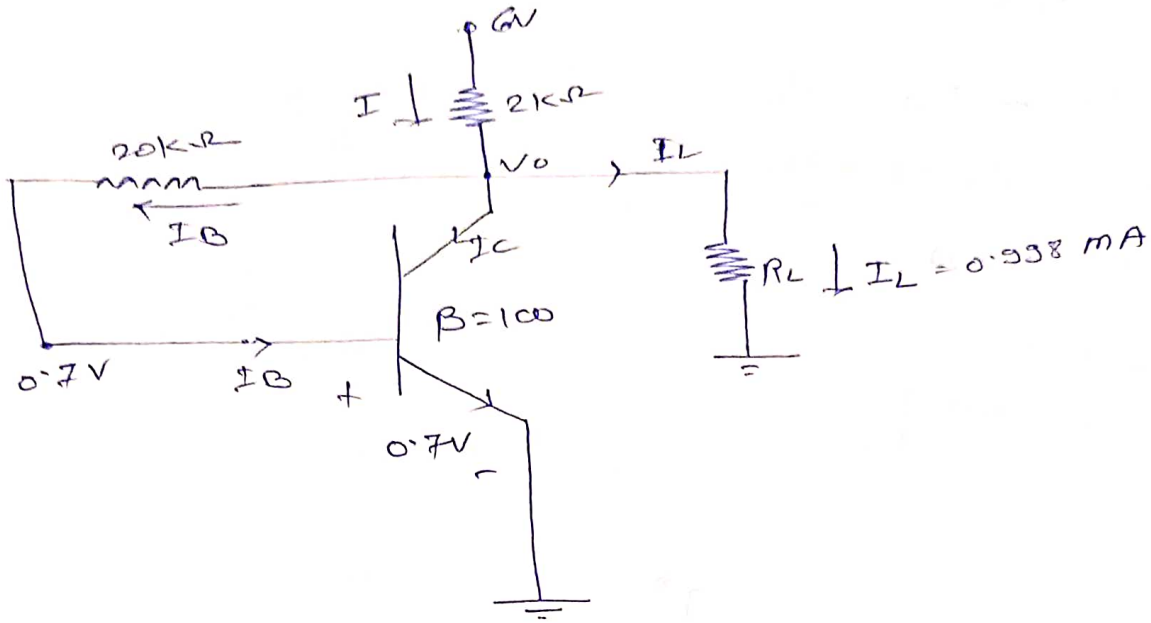

$$I = I_B + I_C + I_L$$

$$\frac{6-V_o}{2} = I_B + I_C + I_L$$

$$\frac{6-V_o}{2} = \frac{V_o-0.7}{20} + 100\left(\frac{V_o-0.7}{20}\right) + \frac{V_o-0}{1}$$

$$60-10V_o = V_o-0.7 + \frac{V_o-0}{1} + 100V_o - 70$$

$$131V_o = 130.7 + 20V_o$$

$$V_o = \frac{130.7}{131k} \text{ volt.}$$

$$\boxed{V_o = 0.998 \text{ volt}}$$

$$I_C = 100\times\left(\frac{0.998-0.7}{20}\right) \quad 60-10V_o$$

$$\boxed{I_C = 1.49\,mA}$$

11.40

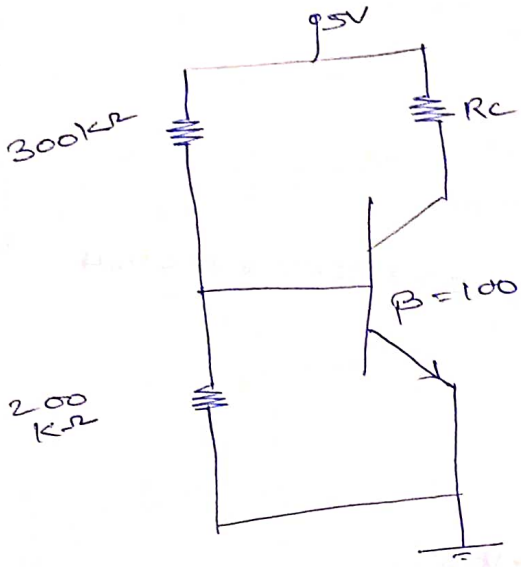

a) $R_C = 2k\Omega$, (I_C, V_{CE})

b) $R_C = 6k\Omega$, (I_C, V_{CE})

Soln:-

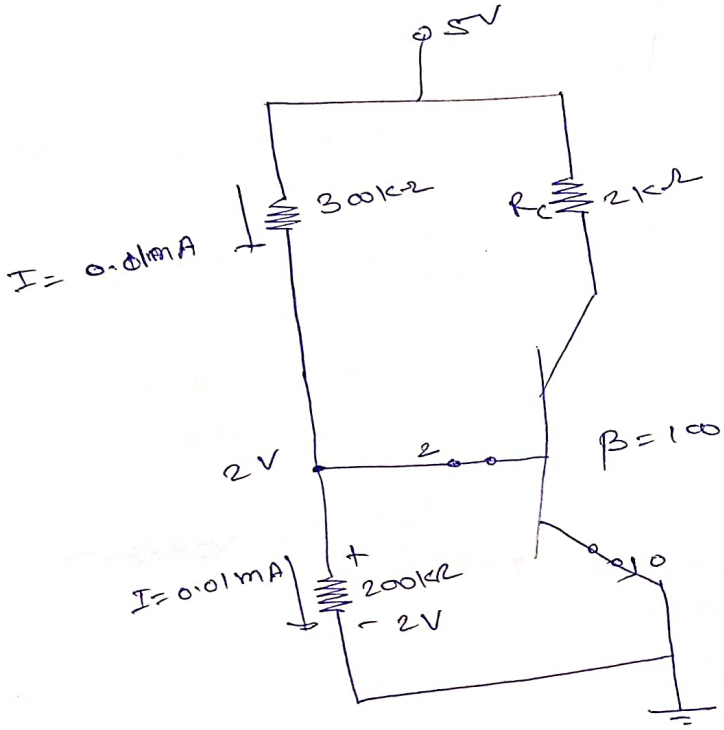

$V_P > V_n$

V_{BE} active $\times$ $(V_P > V_n)$

BJT ON

FB

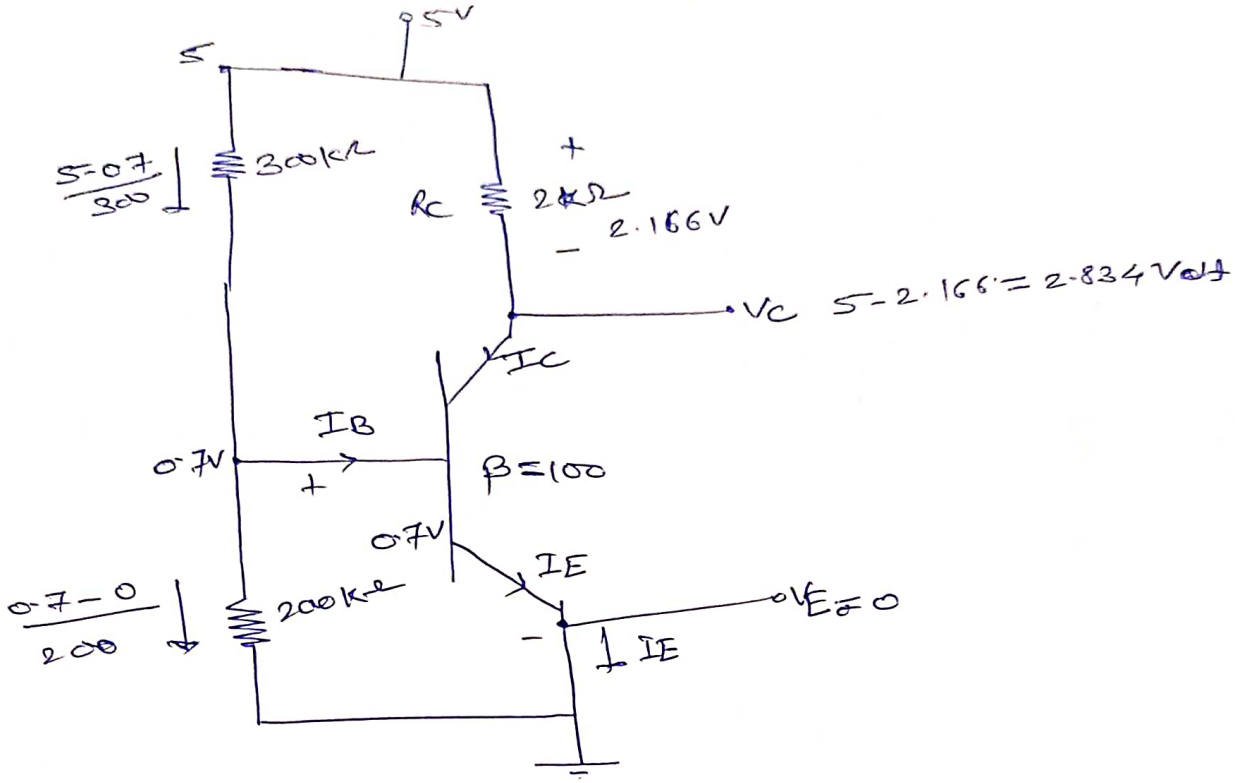

$$I_B = \frac{5-0.7}{300} - \frac{0.7-0}{200}$$

$$\boxed{I_B = 0.01083 \text{ mA}}$$

$$I_C = \beta I_B$$

$$= 100 \times 0.0183$$

$$\boxed{I_C = 1.083 \text{ mA}}$$

$\therefore$ $R_C = 2\Omega$

$I_C = 1.083 \text{ mA}$

$V_{CE} = 2.834 \text{ V}$.

Q)

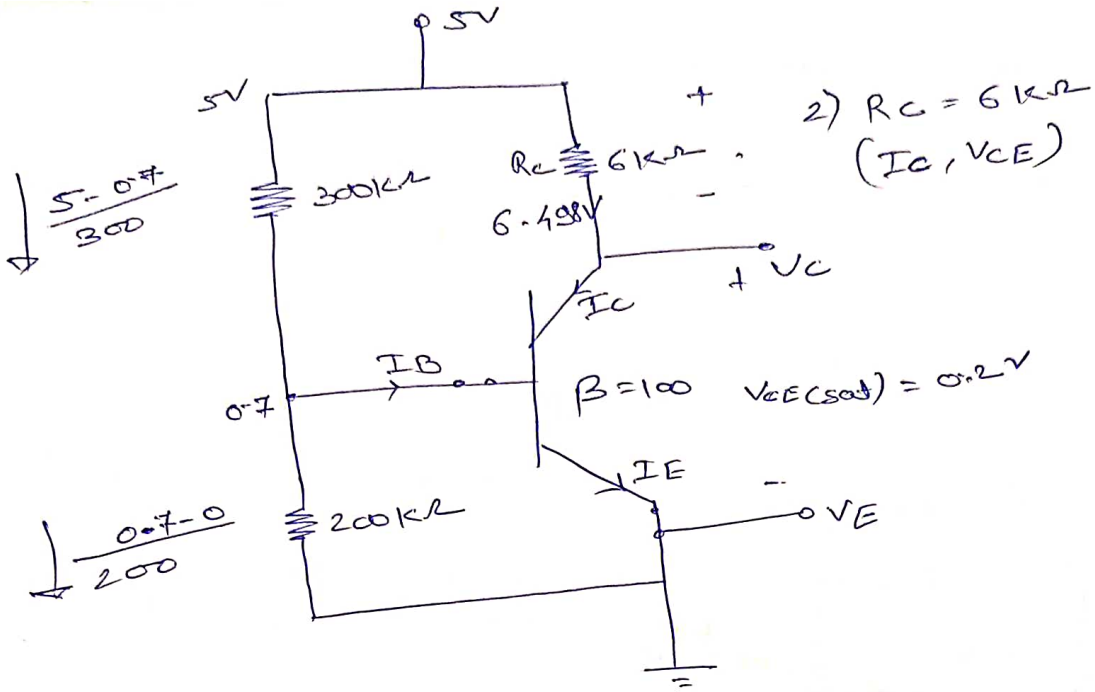

2) $R_C = 6\,K\Omega$
(I_C, V_{CE})

Sol:-

① O.C. Test BJT is active

$$I_B = \frac{5-0.7}{300} - \frac{0.7}{200} = 0.01083\ mA$$

$$I_C = 100 \times 0.01083$$
$$= 1.083\ mA$$

$$V_C = 5 - 6.498 = -1.498V$$

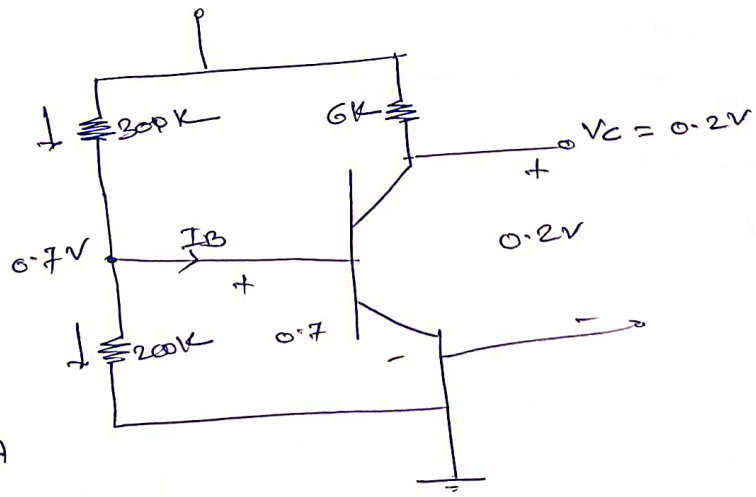

$I_B \Rightarrow$ No change
$= 0.01083\ mA$

$$I_{C(sat)} = \frac{5-0.2}{6}$$
$$= \frac{4.8}{6} = 0.8\ mA$$

$I_E = I_{C\,sat} + I_B \Rightarrow 0.81085\ mA$

$(I_B)_{min} = \frac{0.8}{100} = 0.008\ mA$

$$\boxed{I_{B\,min} \geq \frac{I_{C(sat)}}{\beta}}$$

Q)

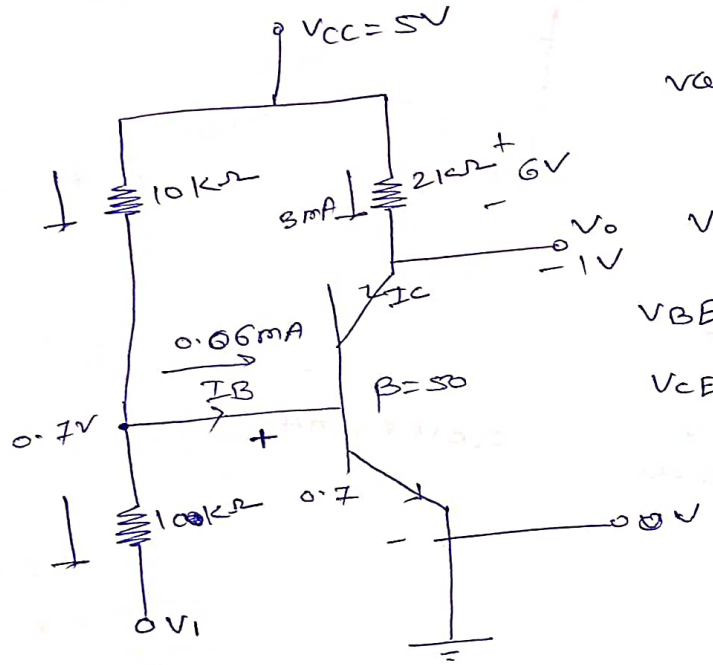

$\frac{5-0.7}{10} = 0.43\ mA$

$\frac{0.7+3}{10} = 0.37\ mA$

value of V_o _____

I_c _____

$V_1 = -3$ volt

$V_{BE(active)} = 0.7V$

$V_{CE\,sat} = 0.2V$

Soln:-

$I_B = 0.06\ mA$

$I_C = \beta I_B$

$= 50 \times 0.06$

$I_C = 3\ mA$

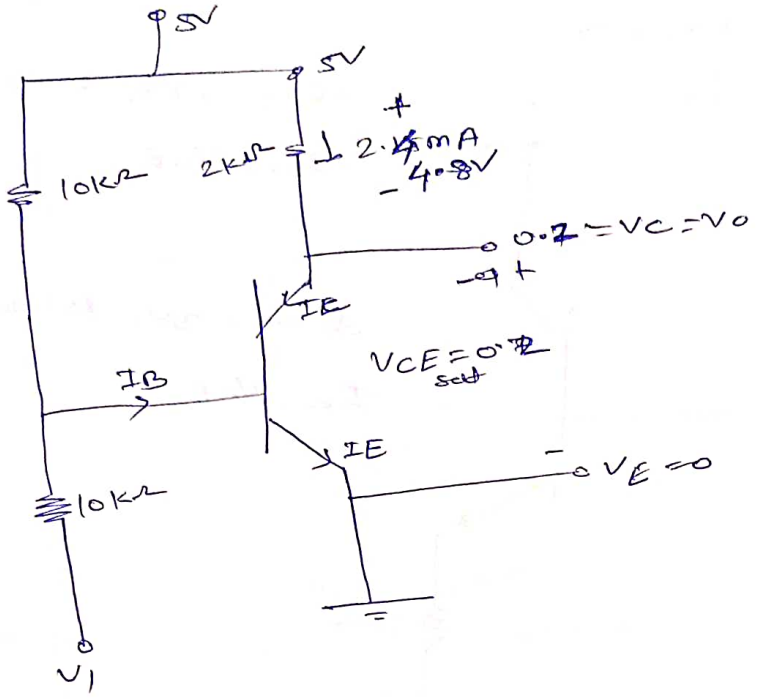

$$\boxed{I_B + I_C = I_E}$$

$0.06 + 2mA = 2.06mA = I_E$

$V_o = 0.2V$

$I_C = 2.4mA.$

$$I_{B\,min} = \frac{I_{Csat}}{\beta}$$

$$I_{Bmin} = \frac{2.4}{50} =$$

$$\boxed{I_{Bmin} = 0.048\ mA}$$

Q)

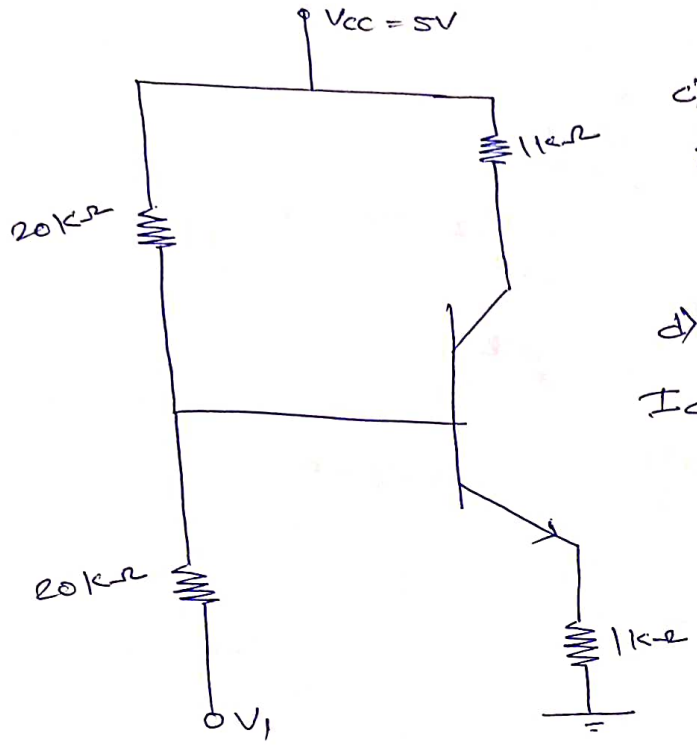

c) $V_1 = -2V$, $\beta \rightarrow$ very high

I_C, V_{CE}

d) $V_1 = 3V$, $\beta \rightarrow$ very high

I_C, V_{CE}

Soln

c)

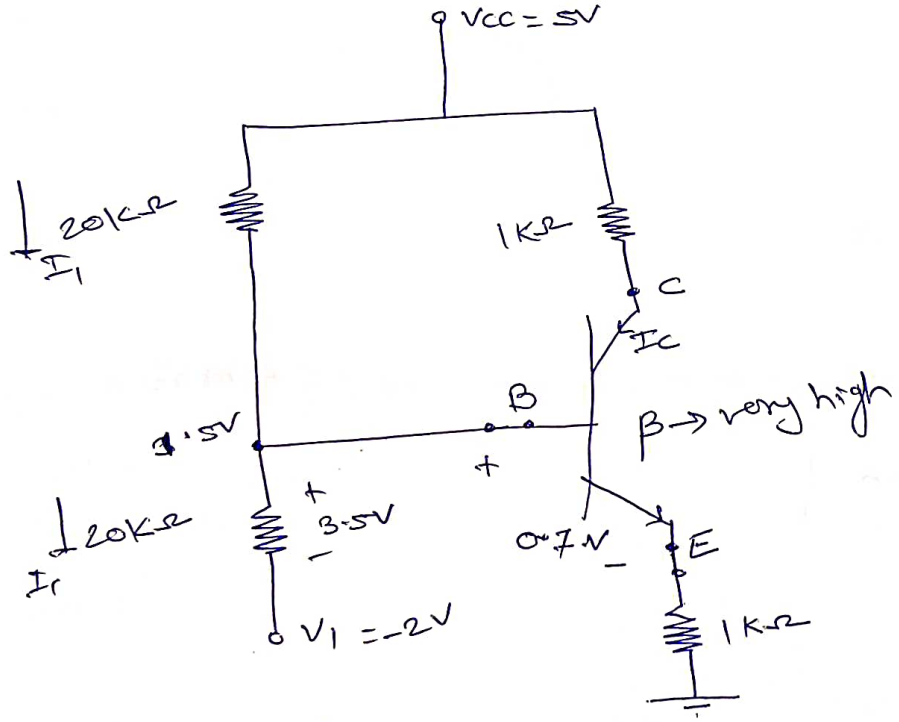

$$\frac{5+2}{40} = 0.175\ mA$$

$V_{th} = 1.5$

$R_{th} = 20 \| 20 = 10k\Omega$

$\beta = \infty$

$I_B = \frac{I_C}{\beta} = \frac{I_C}{\infty} = 0$

$\boxed{I_B = 0}$

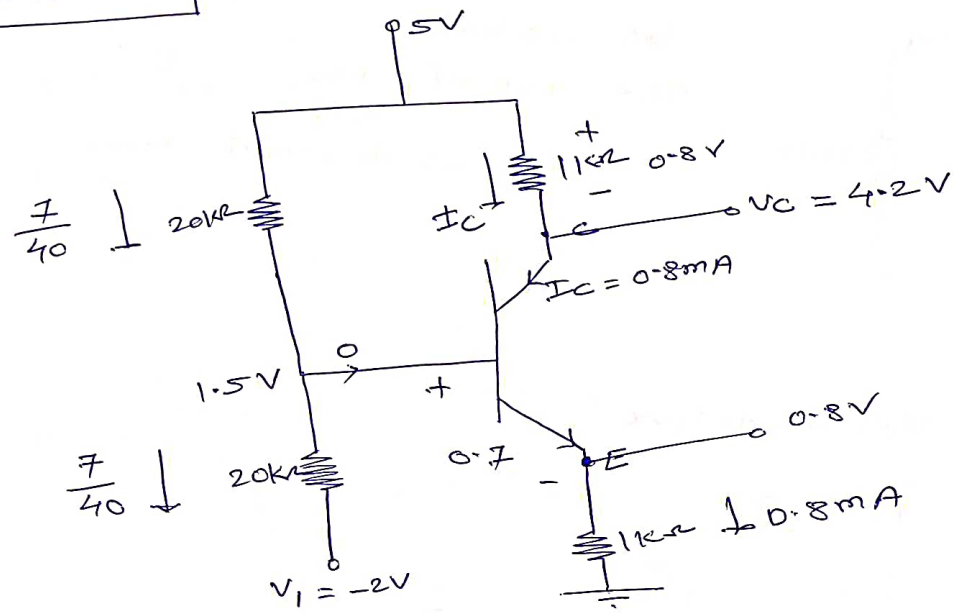

$I_E = I_C = 0.8mA$

$\boxed{V_{CE} = 3.40 \text{ volt}}$

$I_C = 0.800 \text{ mA}$

$V_{CE} = 3.90 mA$

$\boxed{V_o = 4.20 \text{ volt}}$

Q)

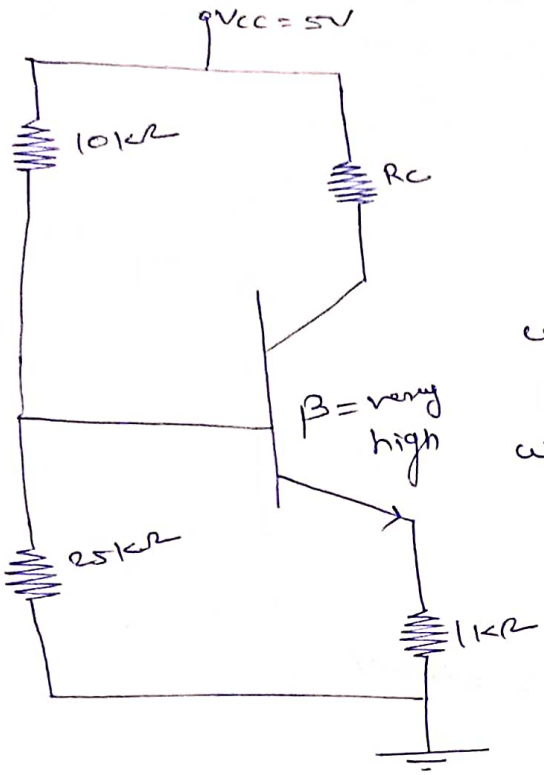

$(V_{BE})_{active} = 0.7V$

$(V_{CE})_{sat} = 0.2V$

when $R_C = R_{C1}$ then V_{CE} is found to be 2.9 volt and

when $R_C = R_{C2}$, then V_{CE} is found to be 2.3 volt

the value of $\frac{R_{C2}}{R_{C1}}$ _____ upto two decimal places.

Sol:-

① o.c. test BJT is active

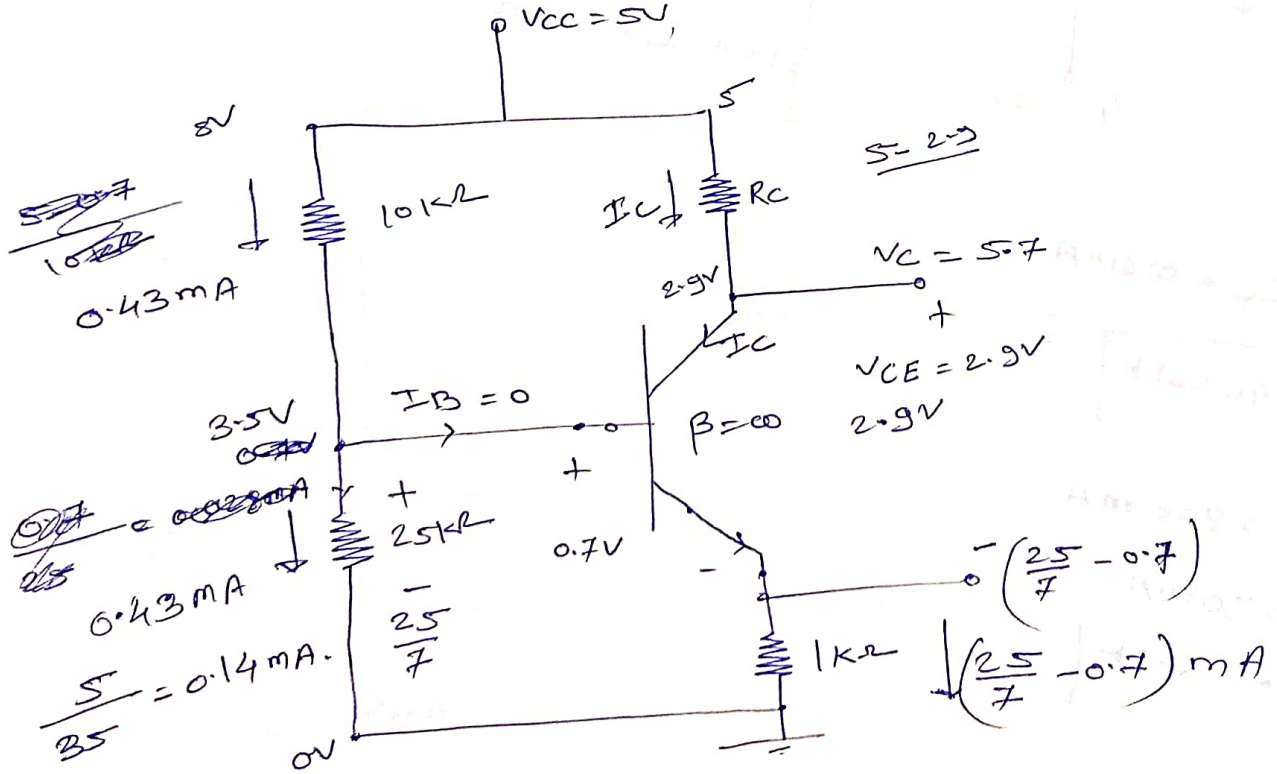

$\cancel{I_{B2} = 0.43 + 0.0028}$

$= 0.402$

$$\frac{I_C}{I_B} = \beta$$

$$\boxed{I_C = \beta I_B}$$

$$I_B = \frac{I_C}{\beta} = \frac{I_C}{\infty} = 0$$

$$\boxed{I_B = 0}$$

$$\frac{25}{7} - 0.7 = \frac{5 - 2.9 - \frac{25}{7} + 0.7}{R_{C1}}$$

$$R_{C1} = \frac{5 - 2.9 - \frac{25}{7} + 0.7}{\left(\frac{25}{7} - 0.7\right)}$$

$$R_{C2} = \frac{5 - 2.3 - \frac{25}{7} + 0.7}{\left(\frac{25}{7} - 0.7\right)}$$

Q)

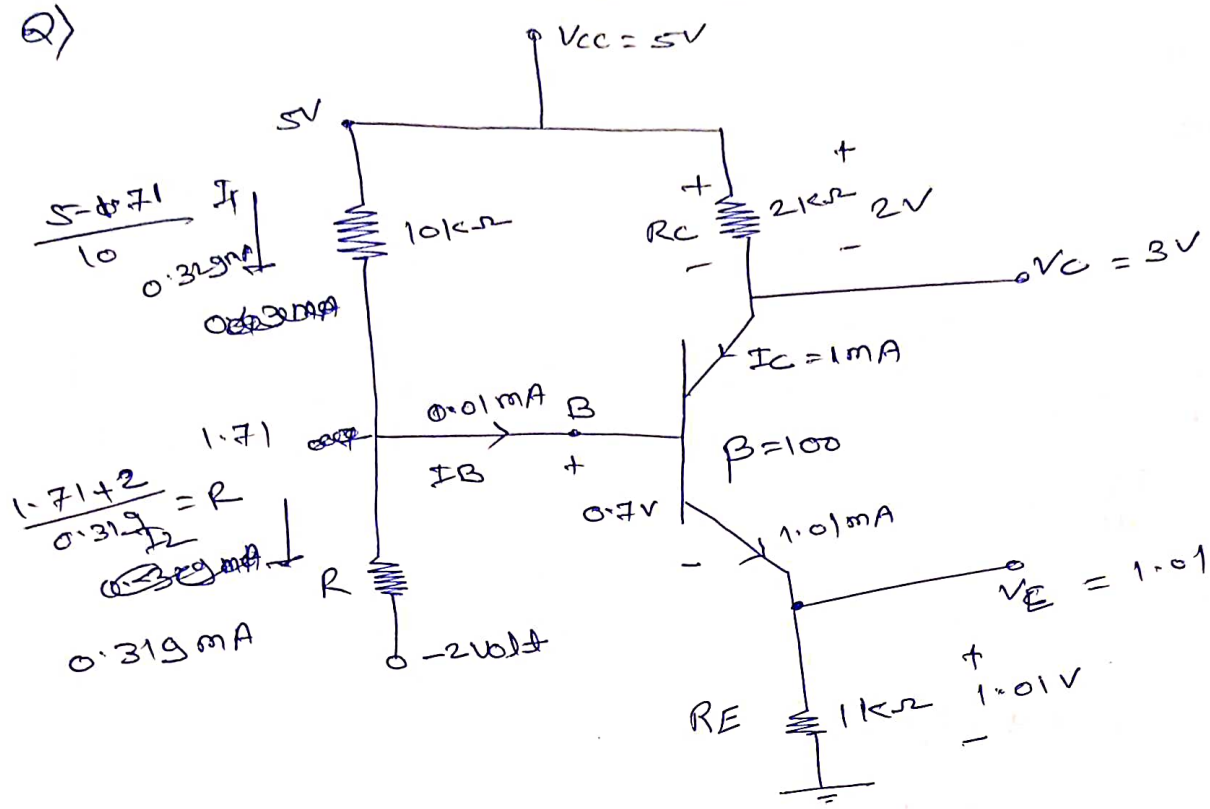

$(V_{BE})_{active} = 0.7V$

$(V_{CE})_{sat} = 0.2V$

voltage across Rc with polarity shown is found to be 2volt

The value of resistance R 11.63 kΩ upto two decimal.

Soln:- $I_C = 1mA$

$I_B = 0.01mA$

$I_E = 1.01 mA$

$I_1 = I_B + I_2$

$I_2 = 0.329 - 0.01 = 0.319mA$

$$R = \frac{1.71+2}{0.319mA} = 11.63k\Omega$$

Q)

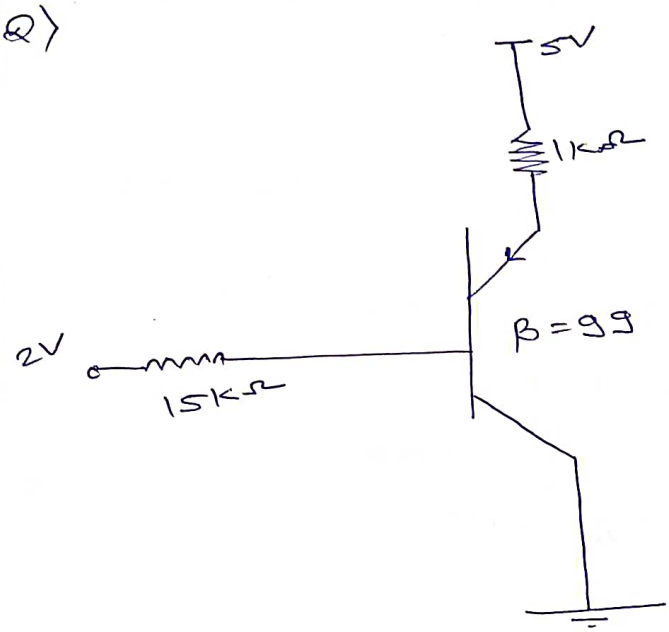

$V_{BE} = -0.7V$

$(V_{EC})_{sat} = 0.2V$

value of collector current

I_C _____ mA

V_B _____ ~~mA~~ Volt

This is pnp

Soln:-

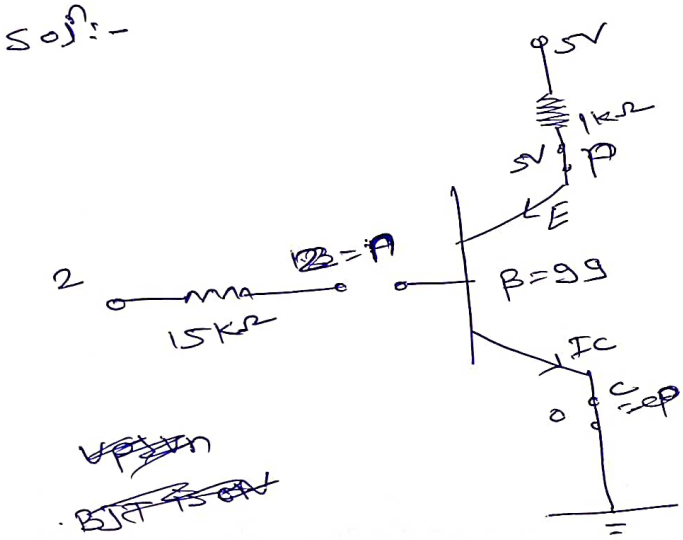

p > n

5 > 2

BJT is active

~~BJT is on~~

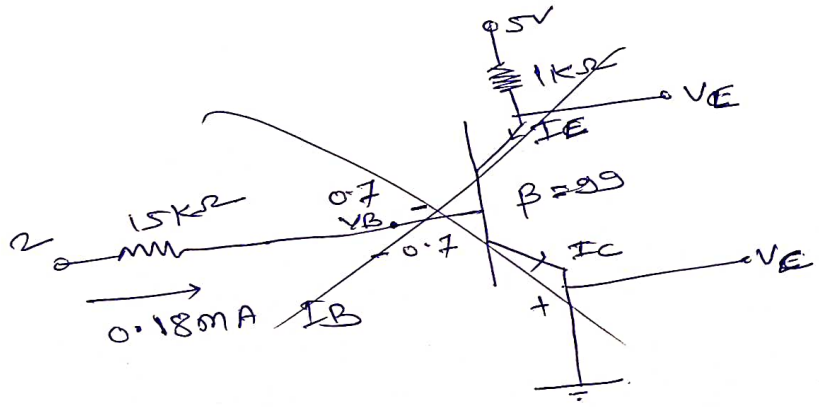

$I_C = I_B \beta$

$= 0.18 \times 99$

$V_{EB} = 0.7$ volt

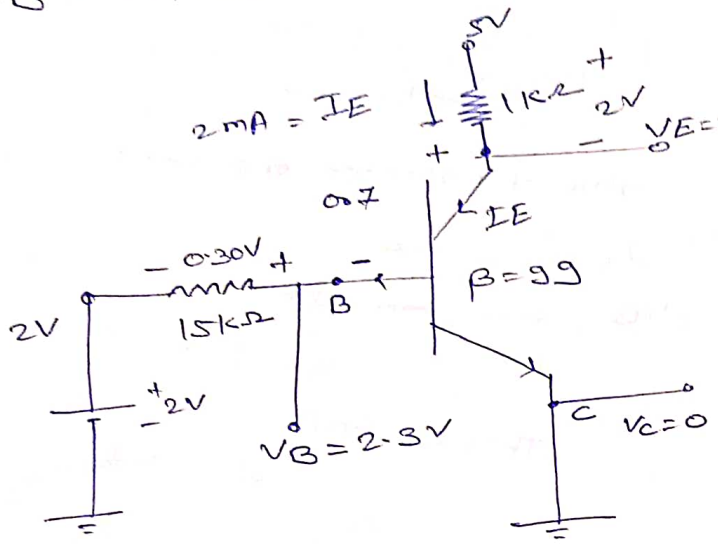

$5 - I_E - 0.7 - 15I_B - 2 = 0$

$2.3 = 100I_B + 15I_B$

$I_B = \frac{2.3}{115} = 0.02\,mA$

$I_C = 1.98\,mA$

$I_E = 2\,mA$

$V_{EB} = 0.7$

$\boxed{V_B = 2.3V}$

$I_C = 1.98\,mA$

pnp :- Base current - outward

Emitter current - inward

collector current - outward

Q)

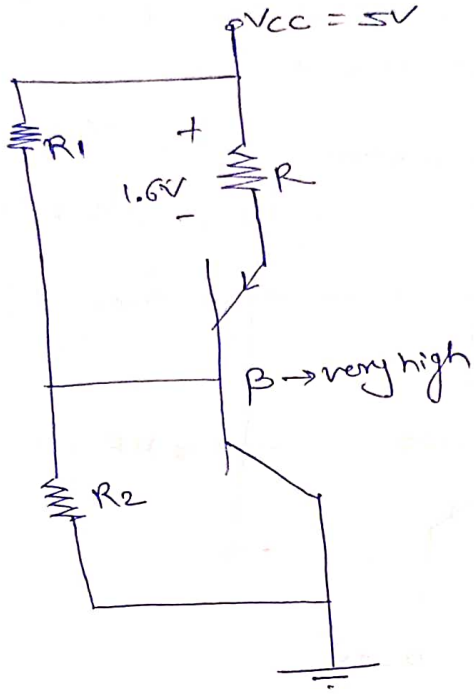

$(V_{EB})_{active} = 0.7$ volt

$(V_{EC})_{sat} = 0.2$ volt

voltage across R is found to be 1.6 volt Resistance R_2 used is the circuit is KR_1. Then the value of K upto two decimal places

Sol:-

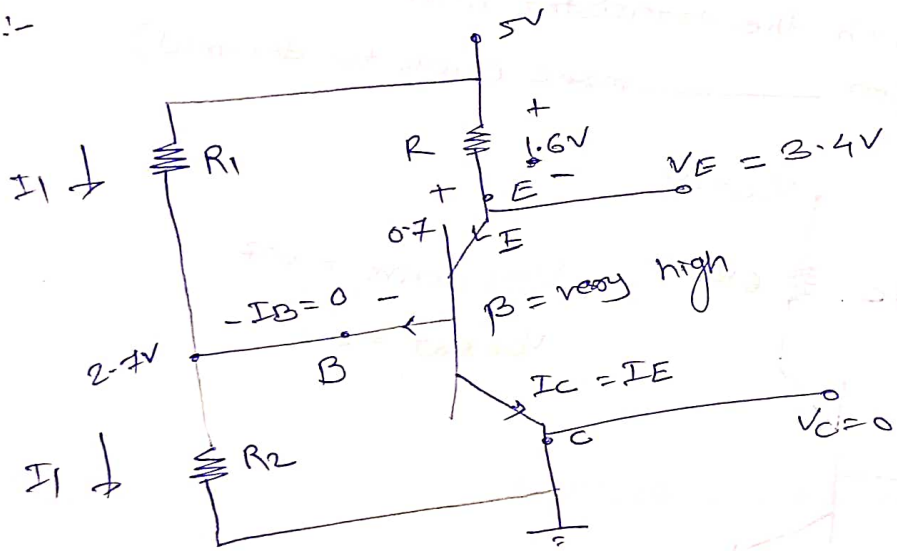

$\beta = \infty$

$I_B = \frac{I_C}{\infty}$

$I_B = 0$

$$\frac{5-2.7}{R_1} = \frac{2.7-0}{R_2} = \frac{2.7}{KR_1}$$

$$\frac{5-2.7}{\cancel{R_1}} = \frac{2.7}{K\cancel{R_1}} \Rightarrow K = \frac{2.7}{2.3} = 1.17$$

Homework

Q)

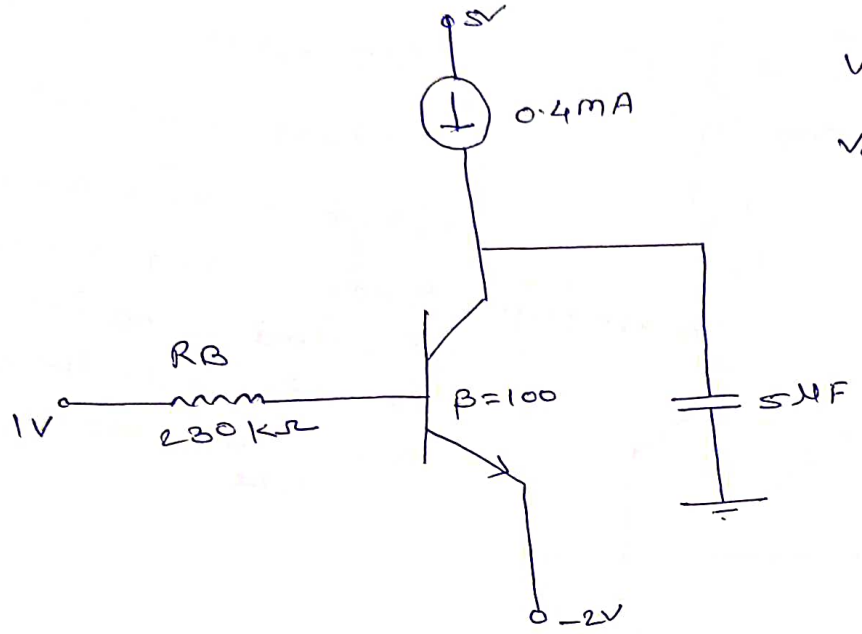

$V_{BE\,active} = 0.7$

$V_{CE\,sat} = 0.2$

Circuit is started at $t=0$ and capacitor is discharged initially After which the transistor will enter into ~~st~~ saturation region _____ msec (upto two decimal)

Q)

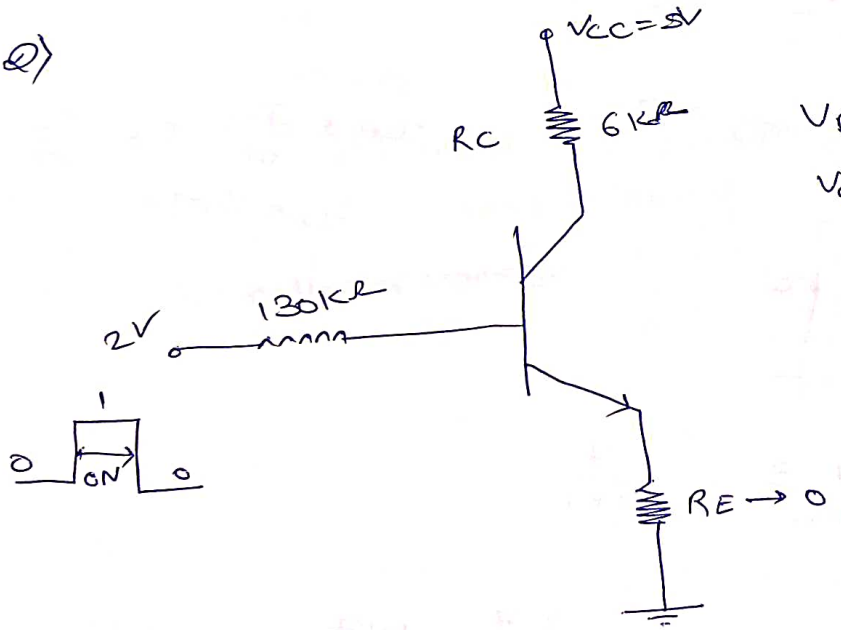

$V_{BE\,active} = 0.7$

$V_{CE\,sat} = 0.2$

The above BJT circuit has to be used as a switch (~~remaining~~ meaning ~~increasing~~ is that in ON case it will be in satn and in off case it will in cut off) Triggering pulse is used to turn ON and OFF the BJT for proper functioning of BJT as a switch the minimum value of current gain α will be ____ $\times 10^{-2}$. (upto 2 decimal)

BJT :→

Lect-1

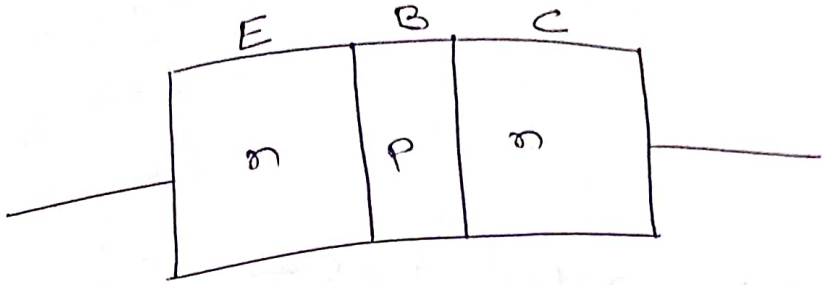

EB Junction

CB Junction

	EB	CB
npn :-		
A) Active region	F.B.	R.B.
B) Saturation region	F.B.	F.B.
C) Cut off region	R.B	R.B.
D) inverse active region	R.B.	F.B. → Never used.

npn :→

B → p

E → n

C → n

if $(V_B - V_E)_{o.c.} > (V_{BE})_{Active}$

↓

ON < Active / saturation

if $(V_B - V_E)_{o.c.} < (V_{BE})_{active}$

↓

off → cut off.

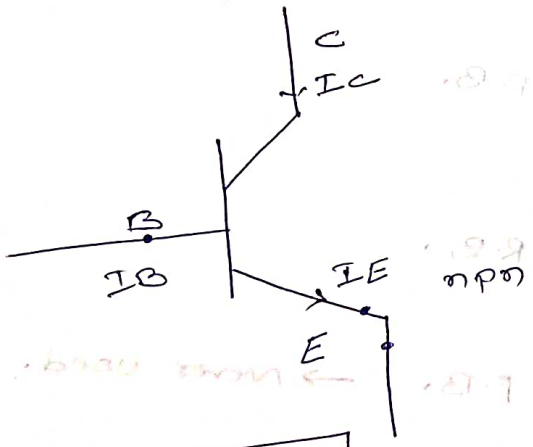

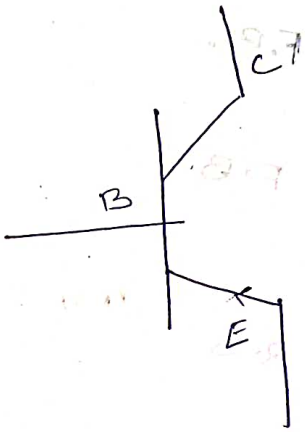

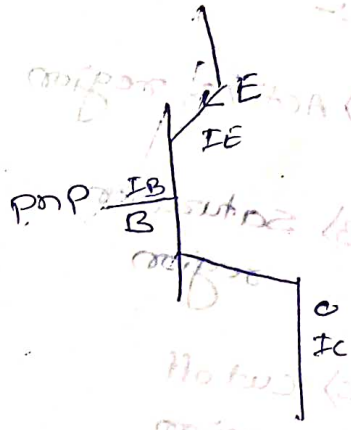

$$\boxed{I_B + I_C = I_E}$$

$$\boxed{I_E = I_B + I_C}$$

KCL Never fail

pnp :→

B → n

E → P

C → P

$(V_E - V_B)_{o.c.} \rightarrow (V_{EB})_{active}$

↓

ON < Active, saturation

$(V_E - V_B)_{o.c} < (V_{EB})_{active}$

↓

cut off region.

Active / saturation

→ $\alpha = \frac{I_C}{I_E} = \frac{o/p}{I/p}$ ⇒ $\beta = \frac{\alpha}{1-\alpha}$, $\alpha = \frac{\beta}{\beta+1}$, $\gamma = \beta+1$

↙ common base current gain

$\beta = \frac{I_C}{I_B}$

common Emitter current gain

$\gamma = \frac{I_E}{I_B} = \frac{I_C + I_B}{I_B} = (\beta+1)$

common collect current gain

Imp all cases valid only in active region, they are not valid in case of saturation region.

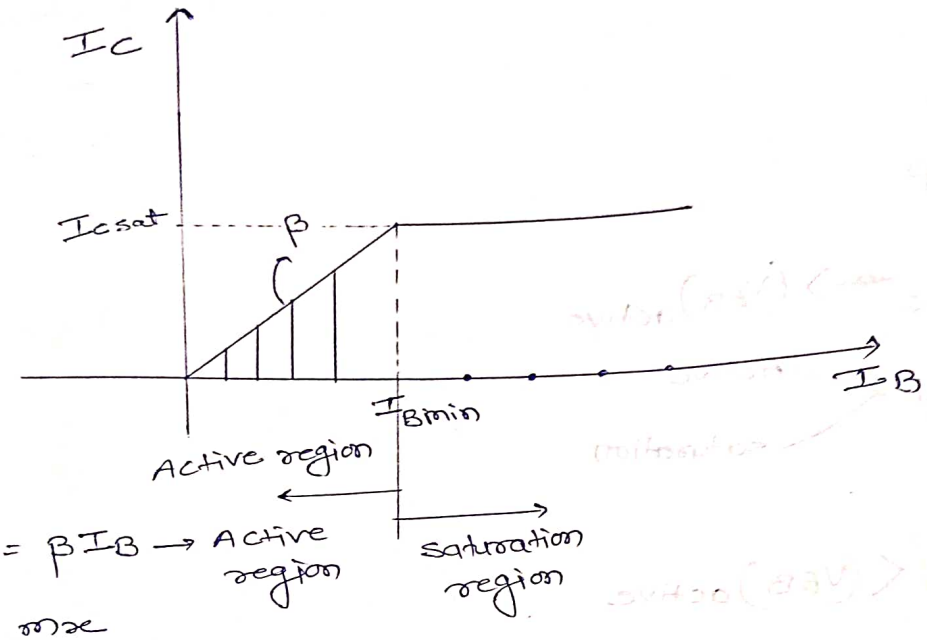

$I_C = \beta I_B \rightarrow$ Active region

$y = mx$

$$\alpha = \frac{I_C}{I_E}$$

$$\beta = \frac{I_C}{I_B}$$

$\therefore I_B > I_{Bmin} \longrightarrow$ saturation region

$$I_{Csat} = \beta I_{Bmin}$$

$$I_{Bmin} = \frac{I_{Csat}}{\beta}$$

$$\boxed{I_{B_{min}} > \frac{I_{Csat}}{\beta}} \rightarrow \text{saturation region}$$

Si

Transistor is ON → and will be in active region if

$V_{CE} > 0.2V$.

→ will be in saturation then $(V_{CE})_{sat} = 0.2V$

$(V_C - V_E) = V_{CE}$

Q)

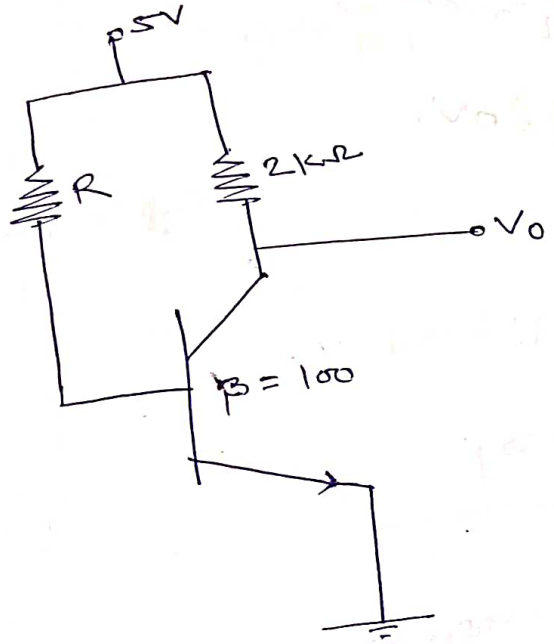

$(V_{BE})_{active} = 0.7V$

1) $R = 430 K\Omega$ region → I_C, V_o, I_E

2) $R = 43 K\Omega$ region → I_C, V_o, I_E

Sol:-

$R = 430\,k\Omega$

$5 - 2 = 3$

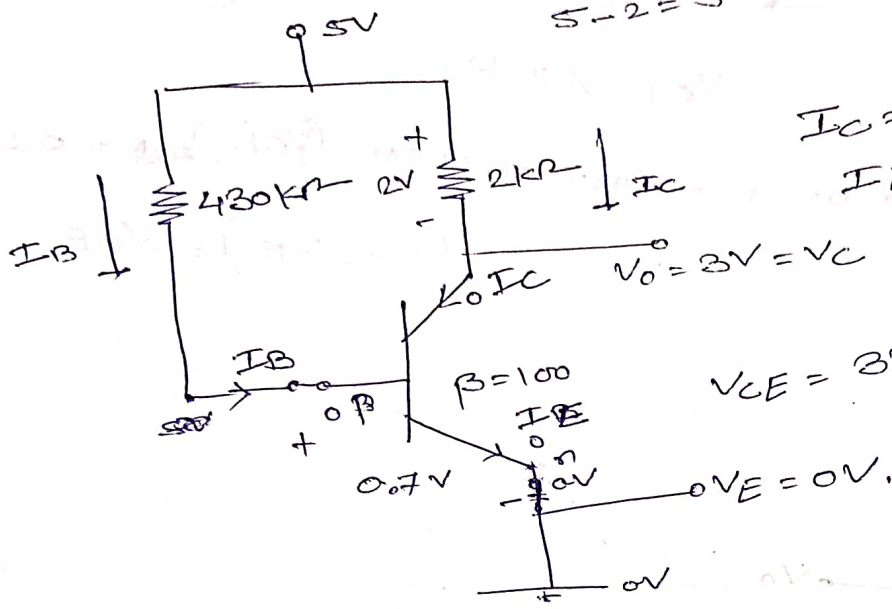

$I_C = \beta I_B$

$I_E = I_C + I_B = (\beta+1) I_B$

$V_{CE} = 3V$

BJT ON

$5 - 430 I_B - 0.7 = 0$

$4.3 = 430 I_B$

$I_B = \frac{4.3}{430} = 0.01\,mA$

$I_C = \beta I_B = \cancel{1mA}\ 100 \times 0.01\,mA$

$= 1\,mA$

$I_E = 1.01\,mA. = I_C + I_B$

$R = 43K\Omega$

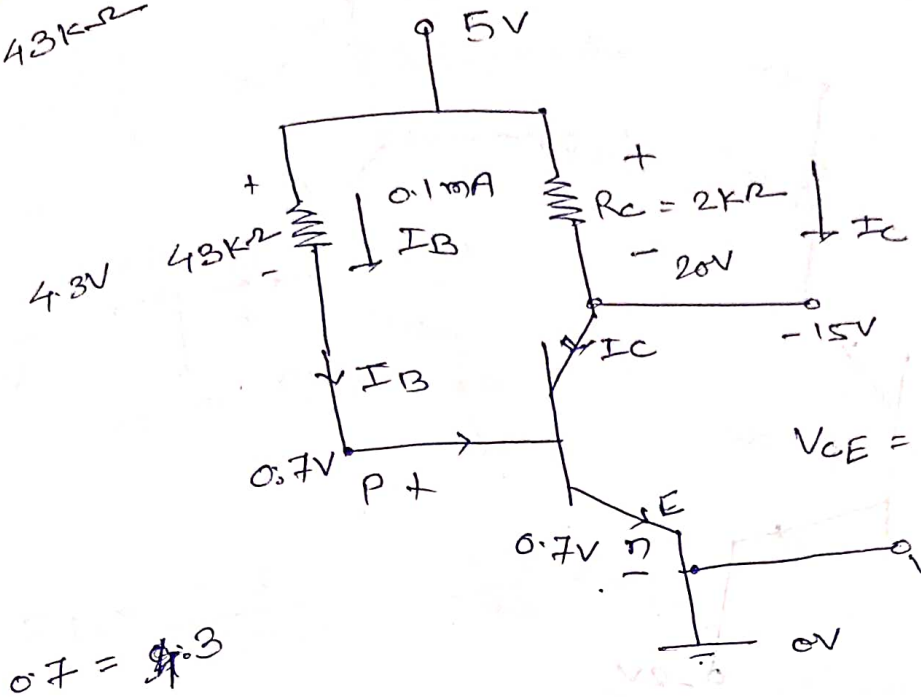

$I_C = \beta I_B$
$= 100 \times 0.1$
$= 10mA$

$V_{CE} = -15 < 0.2V$
$\rightarrow$ saturation

$5 - 0.7 = 4.3$

Lect-2

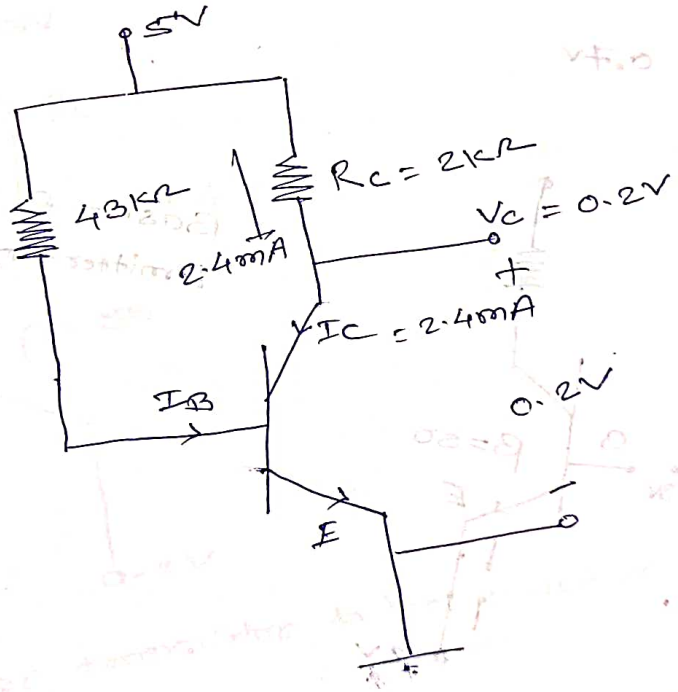

$I_E = I_C + I_B = 2.5mA$

Q)

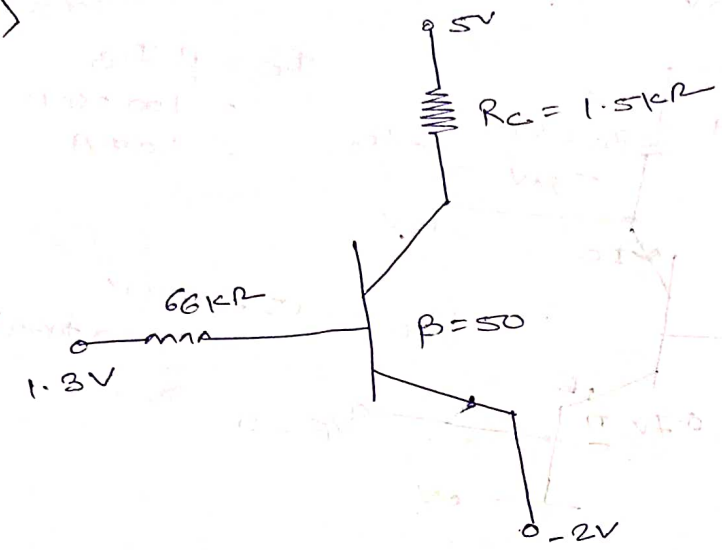

$I_C =$ _____ ?

$(V_{BE})_{active} = 0.7V$

Sol:-

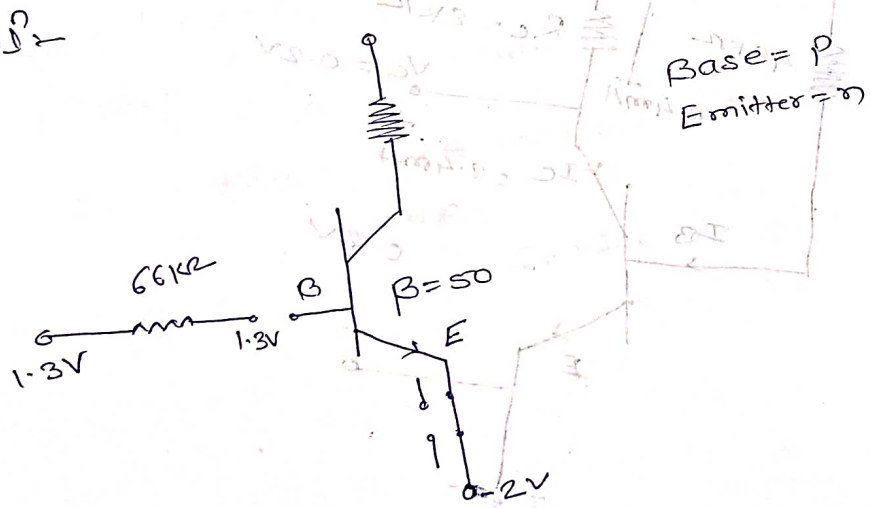

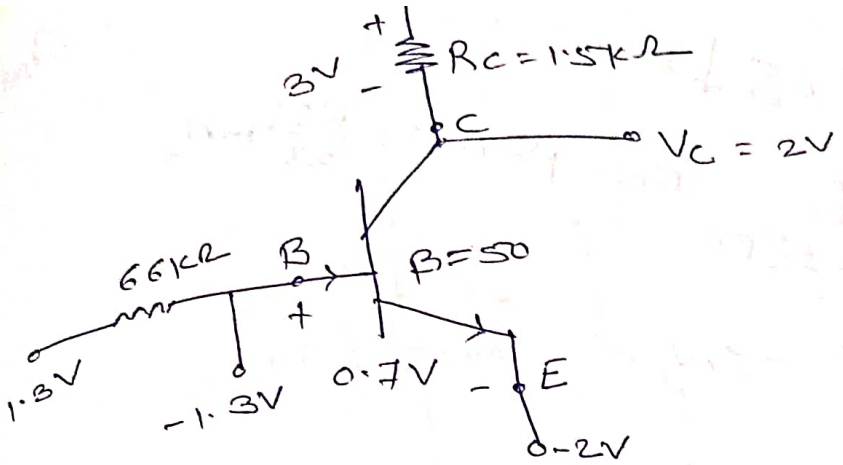

$$I_B = \frac{2.6}{66k\Omega} = \frac{1.3}{33} = \frac{13}{330}\ mA$$

$$I_C = \beta I_B = 50 \times \frac{13}{330} = \frac{65}{33}\ mA \simeq 2mA$$

Q)

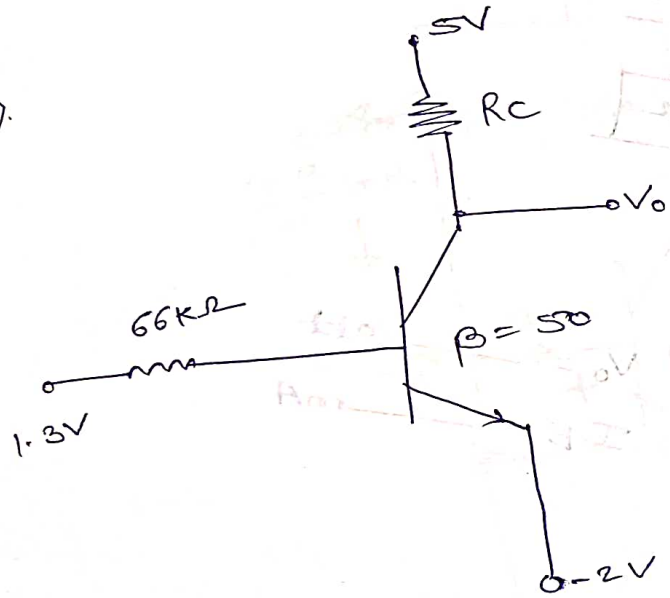

max value of Rc for transistor to be in active region ____ kΩ.

Sol:-

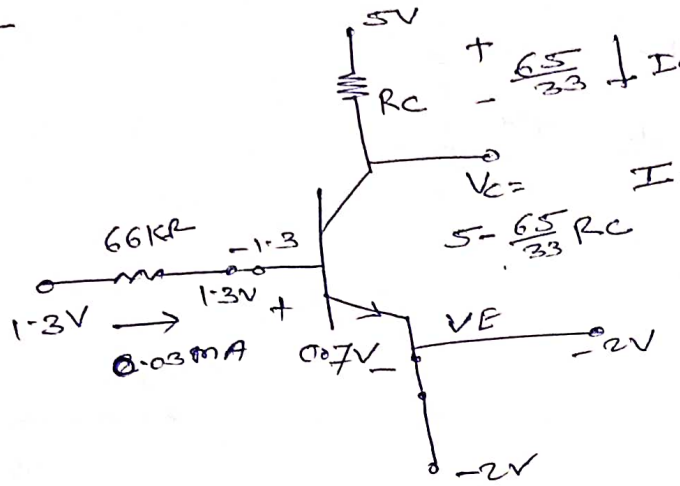

$I_c = \beta I_B = \frac{65}{33}$ mA

$$V_{CE} = \left(7 - \frac{65}{33}R_c\right)$$

$$7 - \frac{65}{33}R_c > 0.2$$

$$6.8 > \frac{65}{33}R_c$$

$$R_c < \frac{6.8 \times 33}{65}$$

$$\boxed{R < 3.45\,K\Omega}$$

2)

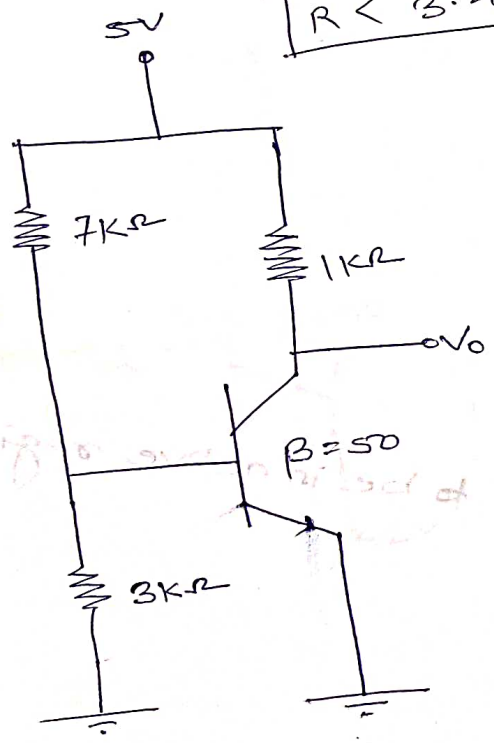

V_o = ____ Volt

I_E = ____ mA

$(V_{BE})_{active} = 0.7V$

Sol:-

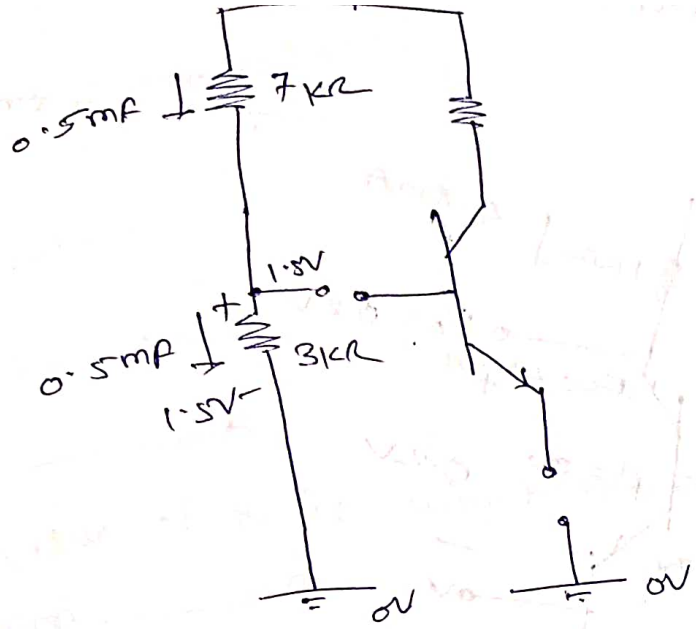

$V_p - V_n > 0.2$

$(1.5 - 0 > 0.2)$ active region

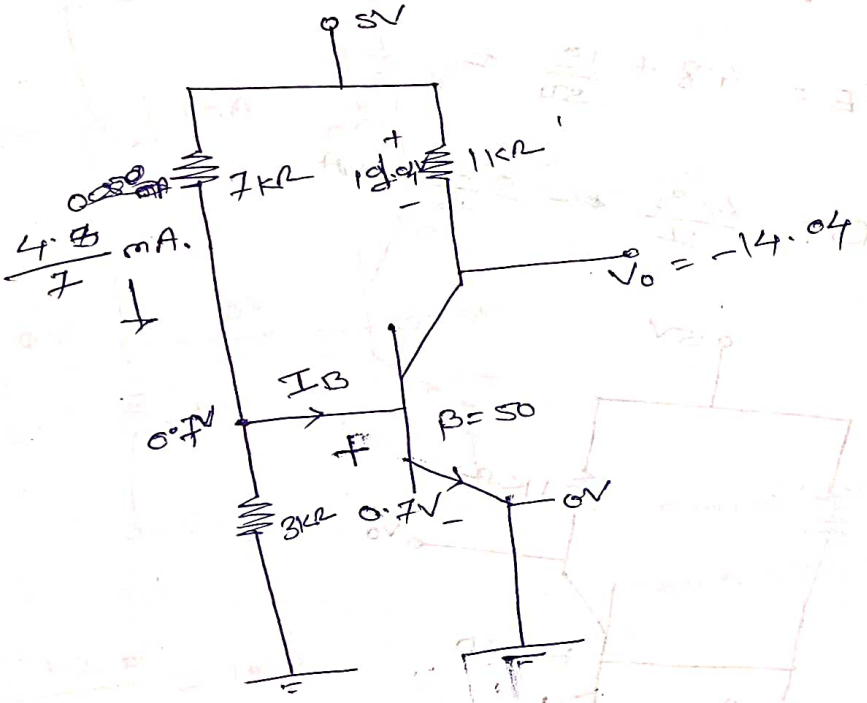

$(V_{BE})_{active} = 0.7$

$I_B = \frac{4.3}{7} - \frac{0.7}{3} = \frac{8}{21} =$

$I_C = \beta I_B = 50\left(\frac{8}{21}\right) = 19.04\ mA.$

$V_{CE} = -14.04\ V$

Now ckt is in saturation region

$\frac{5-0.2}{1} = 4.8mA$

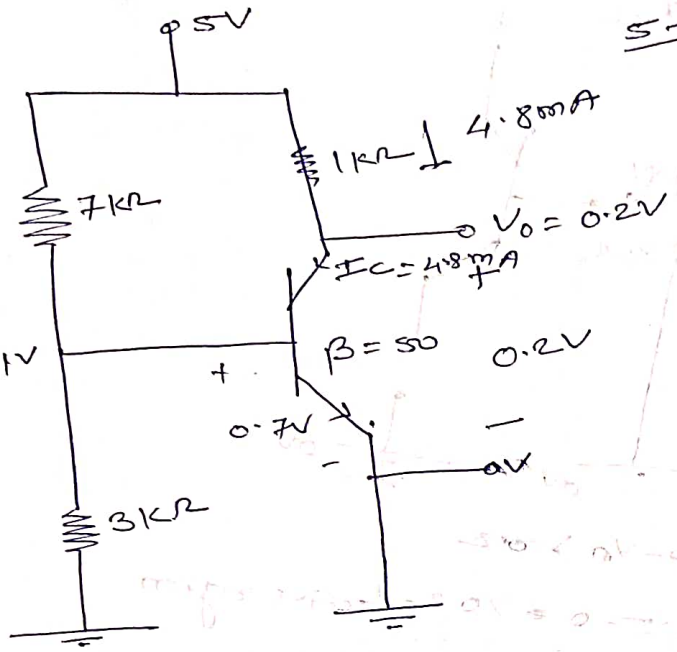

$I_E = 4.8 + \frac{1.9}{50} =$

$I_B = \frac{4.3}{7} - \frac{0.7}{3} mA$

2)

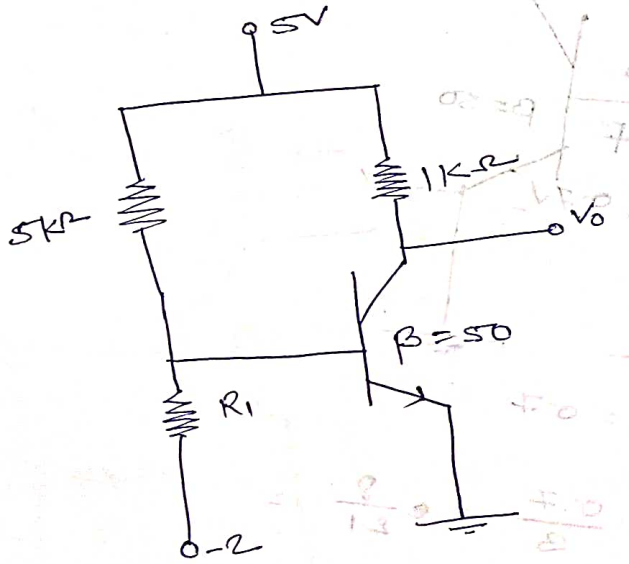

i) $R_1 = \infty$

$V_o =$ _____ volt

ii) $R_1 = 5K\Omega$

$V_o =$ _____ volt

$I_E =$ _____ mA

iii) max^n value of R_1 for which transistor will be in active region _____ $K\Omega$.

Sol^n ①

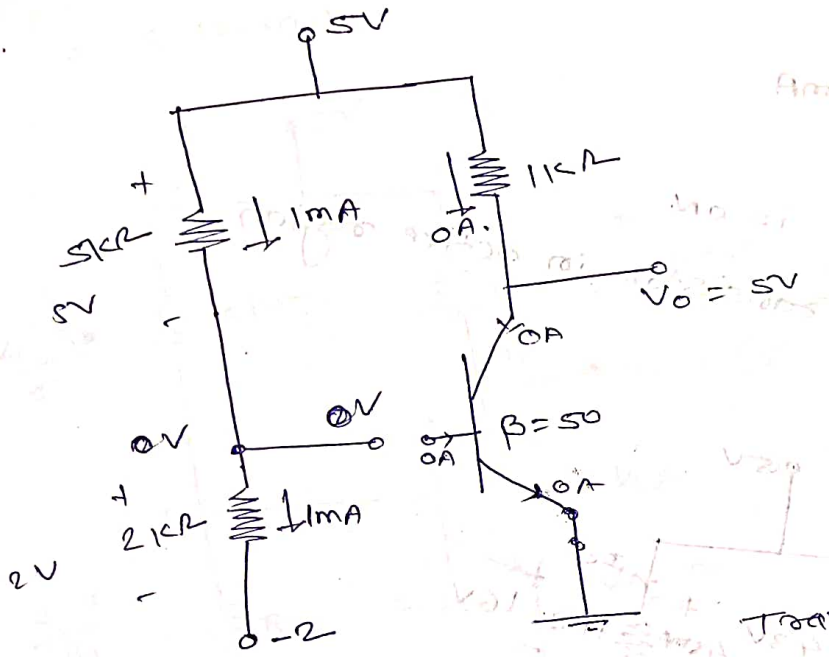

Transistor off

Transistor is in cut off region.

$$\frac{5+2}{7} = 1mA$$

~~Agar dono node ka potential~~

~~Agar~~ Kisi Resistance ~~se~~ zero current flow hora hi ho to uske dono node ka potential same hota hai.

(2)

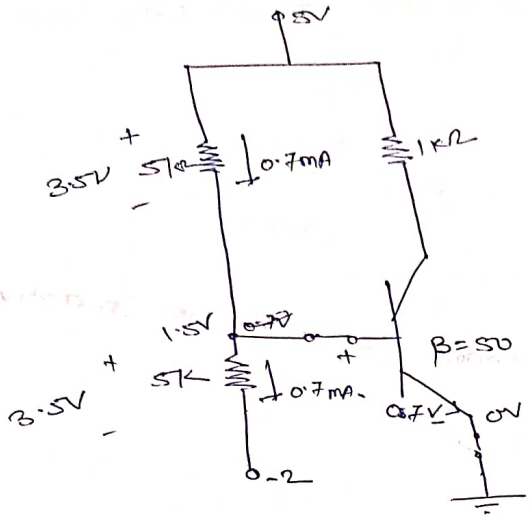

$$\frac{5+2}{10} = 0.7\,mA$$

Transistor is ON.

consider first Transistor in active region

0.7V

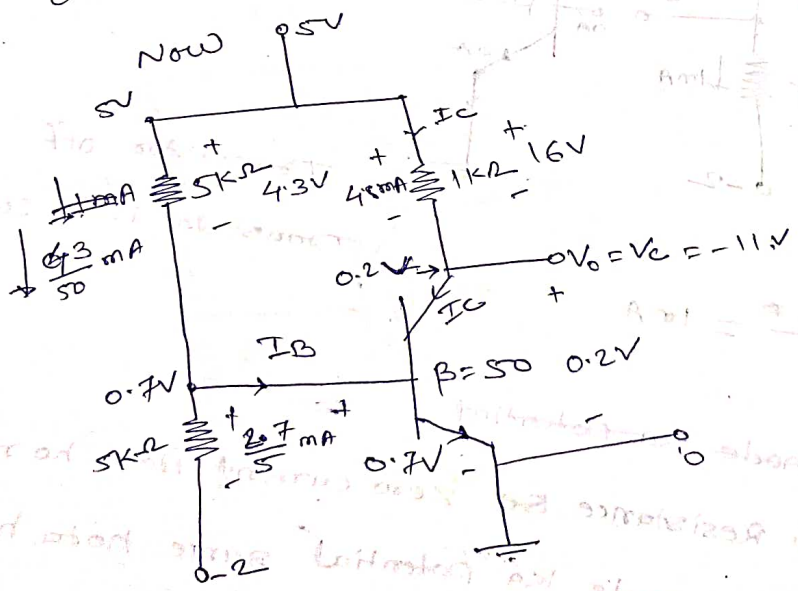

IB =

Ic =

Vc =

Trans

Now

Ic

IB

IE

(111)

$$I_B = \frac{4.3}{5} + \frac{2.7}{5} = \frac{1.6}{5} = 0.32\,mA$$

$$I_C = \beta I_B = 16\,mA.$$

$V_C = -11V$

Transistor in saturation region

Now

$I_C = 4.8\,mA.$

$I_B = 0.32$

$I_E = 4.8 + 0.32$

$= 5.12\,mA.$

(iii)

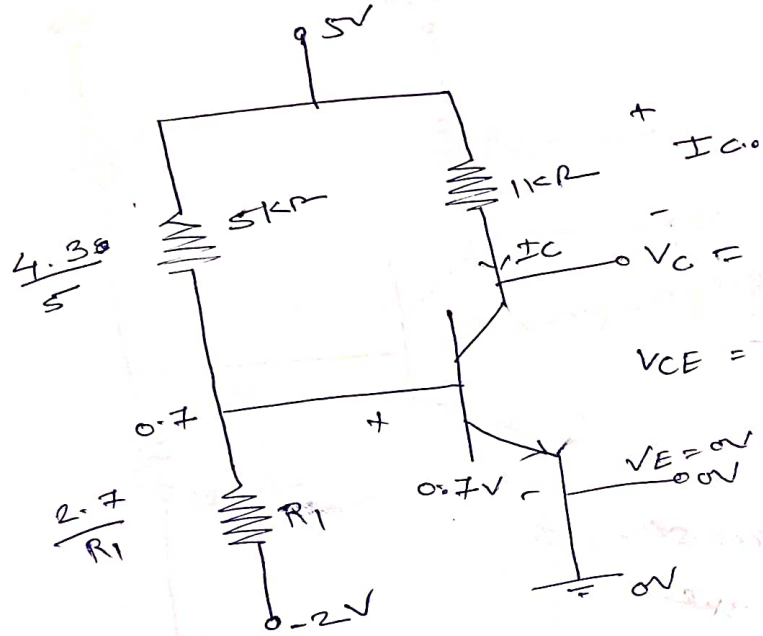

$+ \; I_{C.1} \; -$

$V_C = (5 - I_C)$

$V_{CE} = V_C - V_E = 5 - I_C$

$$I_B = \left(\frac{4.3}{5} - \frac{2.7}{R_1}\right) mA$$

$$I_C = \beta I_B = 50\left(\frac{4.3}{5} - \frac{2.7}{R_1}\right) mA$$

$$5 - I_C > 0.2 \Rightarrow 5 - 50\left(\frac{4.3}{5} - \frac{2.7}{R_1}\right) > 0.2$$

$$\boxed{R_1 < 3.534\,k\Omega}$$

$$\boxed{R_1\,max = 3.534\,k\Omega}$$

Lect - 3

Q) Region of operation of BJT

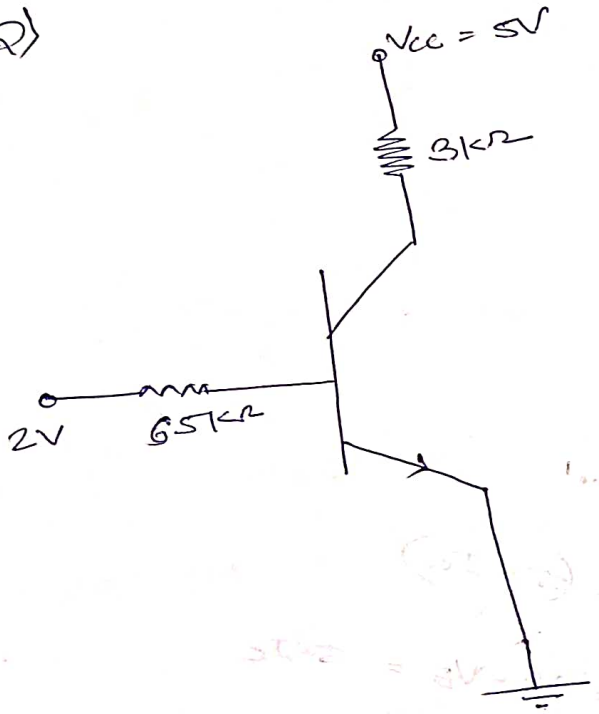

$$\boxed{(V_{BE})_{active} = 0.7V}$$

Soln:-

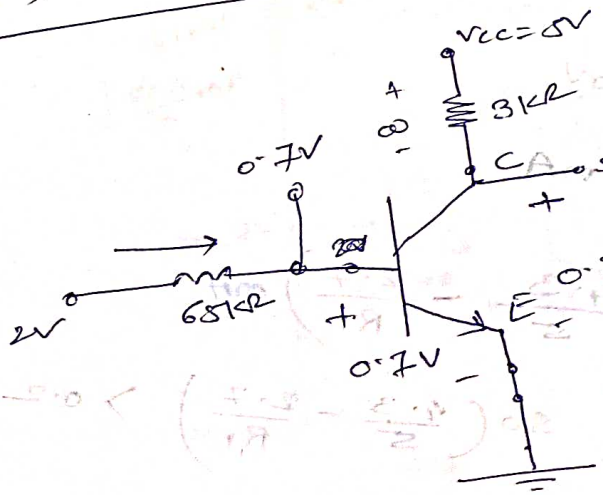

$V_B = 2V$

$V_E = 0V$

BJT ON

$$I_B = \frac{1.3}{65} = 0.02\,mA$$

$$I_C = \beta I_B = \infty \times 0.02$$

$$I_C = \infty$$

saturation region

0.2V replace

$$\left.\begin{aligned} I_B &= 0.02 \\ I_C &= 1.6\,mA \\ I_E &= 1.62\,mA \end{aligned}\right\}$$

Q)

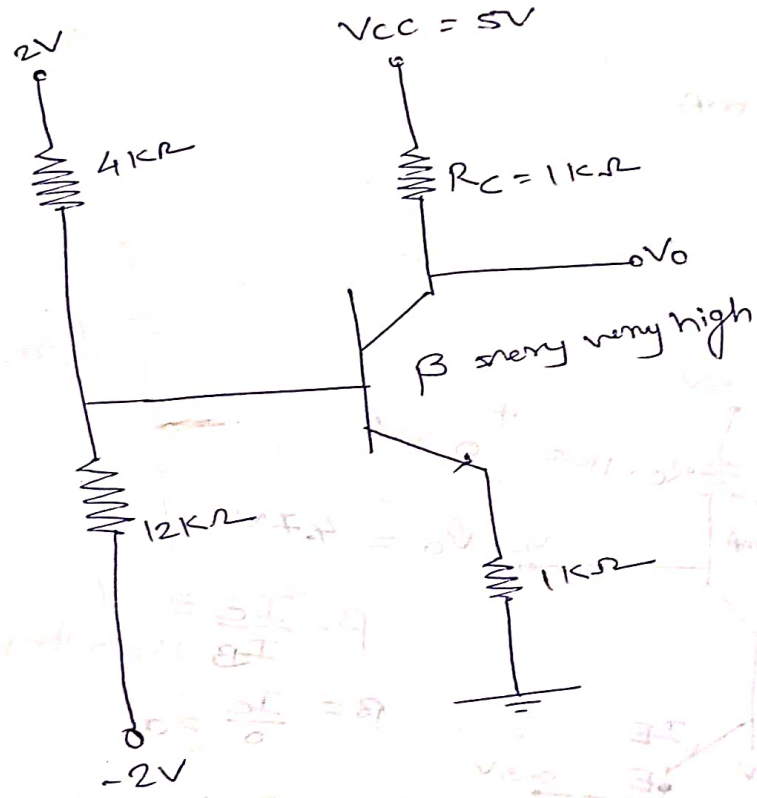

$(V_{BE})_{active} = 0.7V$

Sol^n:→

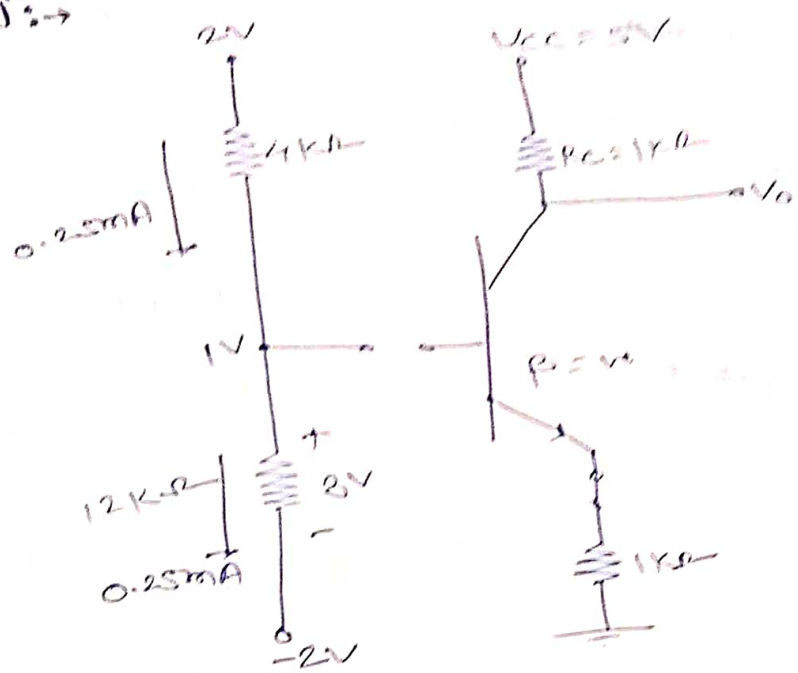

$$\frac{2+2}{16} = \frac{1}{4} = 0.25mA$$

$$-2+3 = 1V$$

Now BJT is ON

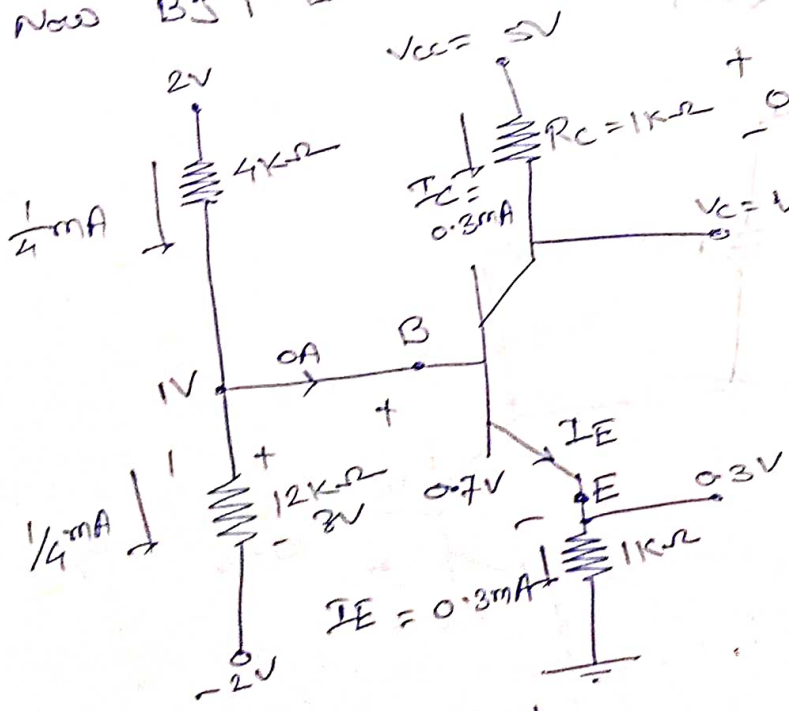

$$\beta = \frac{I_C}{I_B}$$

$$\beta = \frac{I_C}{0} = \infty$$

$$I_E = I_C + I_B \cong I_C$$

$$-2+3 = 1V$$

β = very high

$I_B \to 0$

$V_{CE} = 4.4V > 0.2V$

Q)

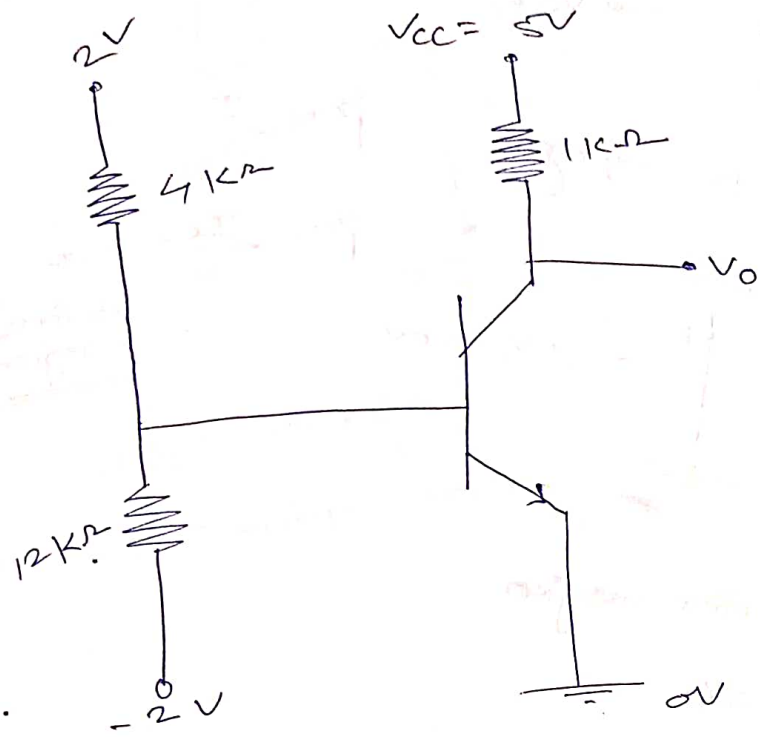

region of operation = ?

V_o = ?

I_C, I_E = ?

Sol:-

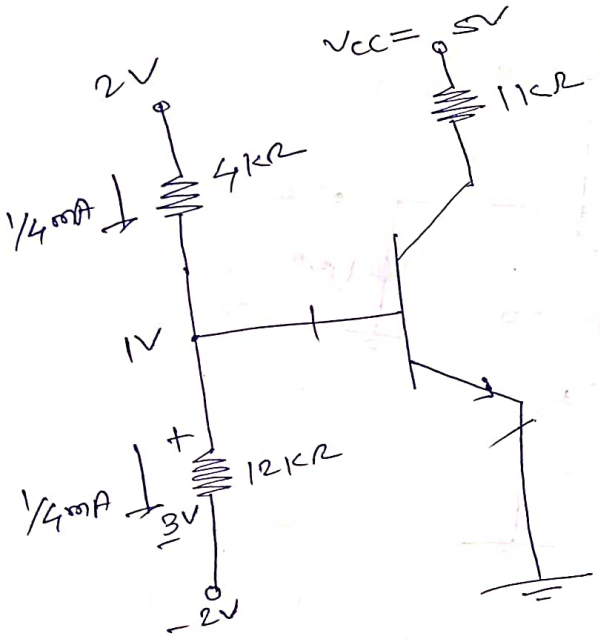

$\frac{4}{16} = \frac{1}{4}mA$

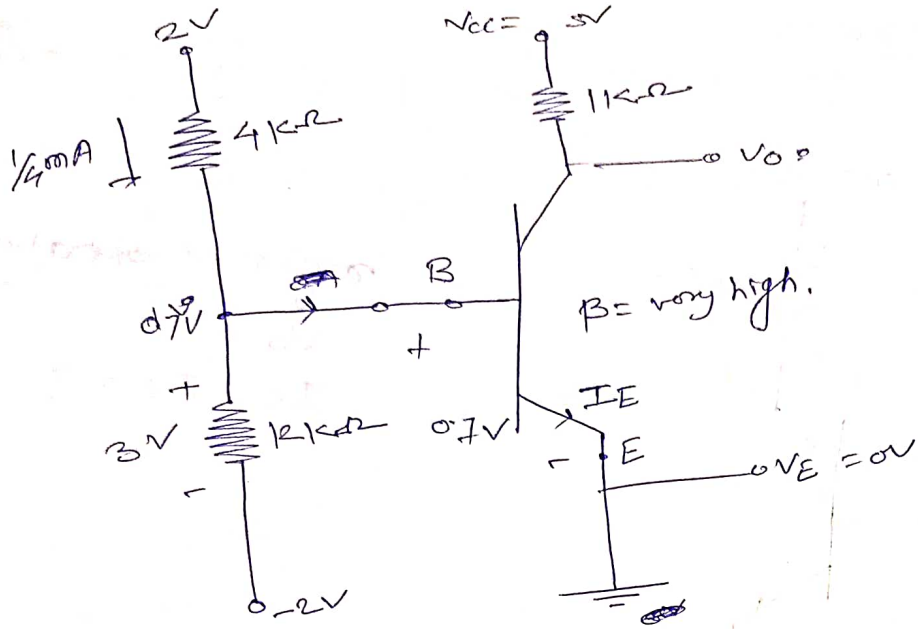

$$\beta = \frac{I_C}{I_B}$$

$$\beta = \frac{I_C}{0} = \infty$$

Active region

BJT is saturation region

Q)

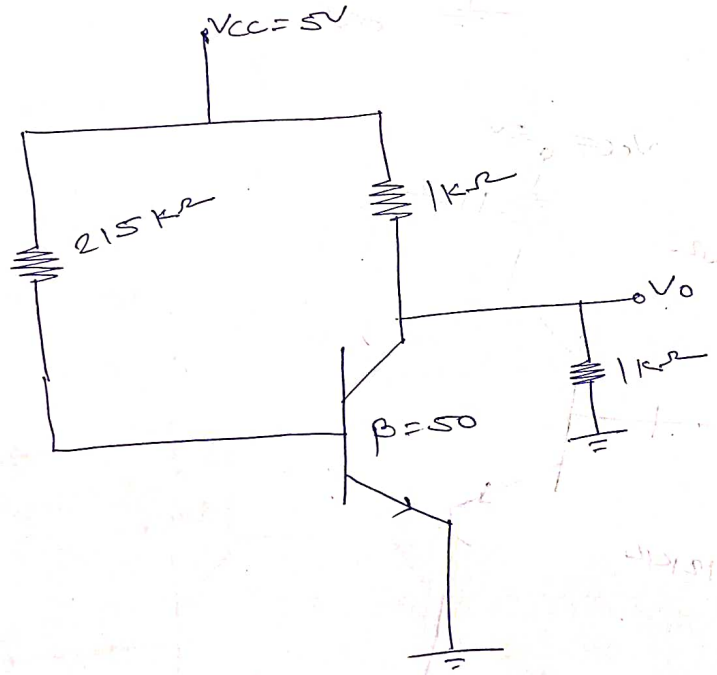

$I_C = \beta I_B \rightarrow$ active

$$\beta = \frac{I_C}{\beta} \longrightarrow 0.$$

Sol:-

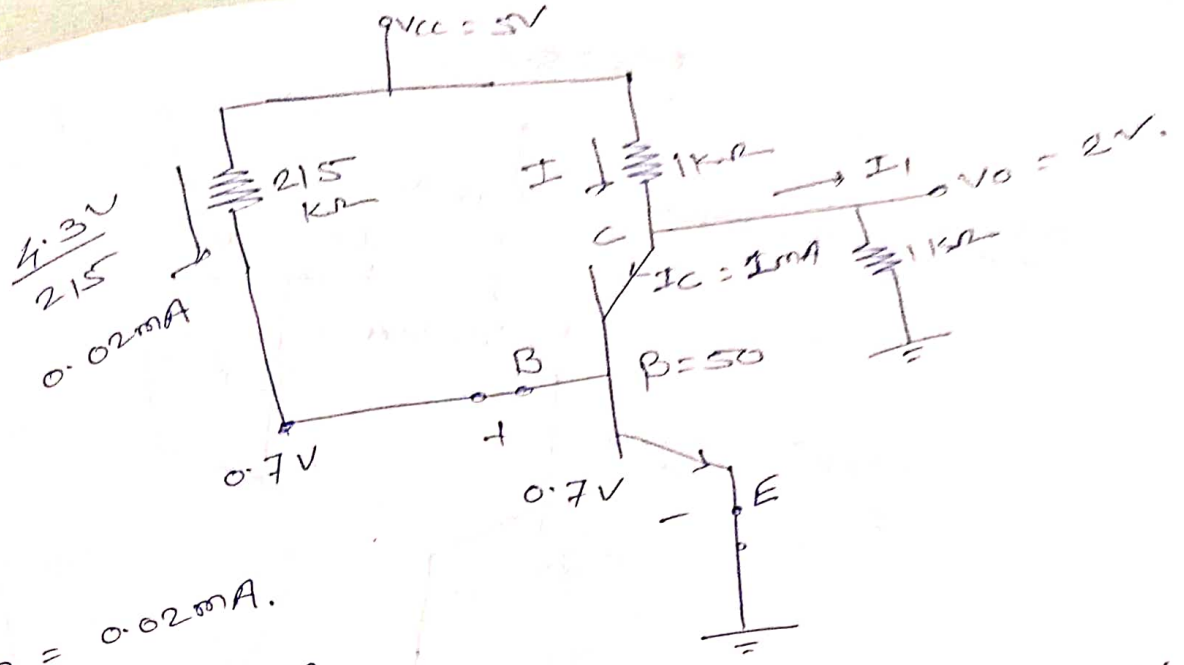

$I_B = 0.02\,mA.$

$I_C = \beta I_B = 1\,mA$

$$\frac{5 - V_o}{1} = 1 + \frac{V_o - 0}{1}$$

$5 - V_o = 1 + V_o$

$V_o = 2\,V = V_c$

Q)

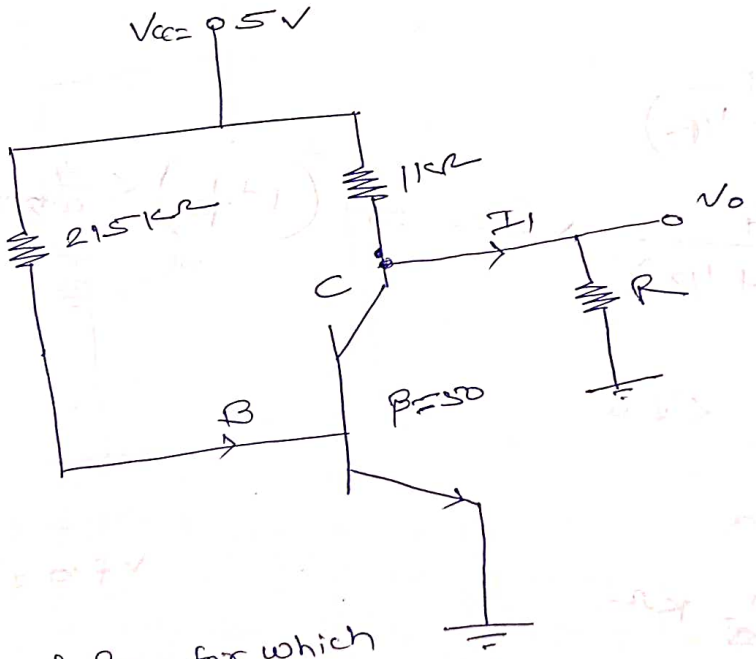

minimum value of R for which transistor will be in active region

_____ Ω.

Sol^n:-

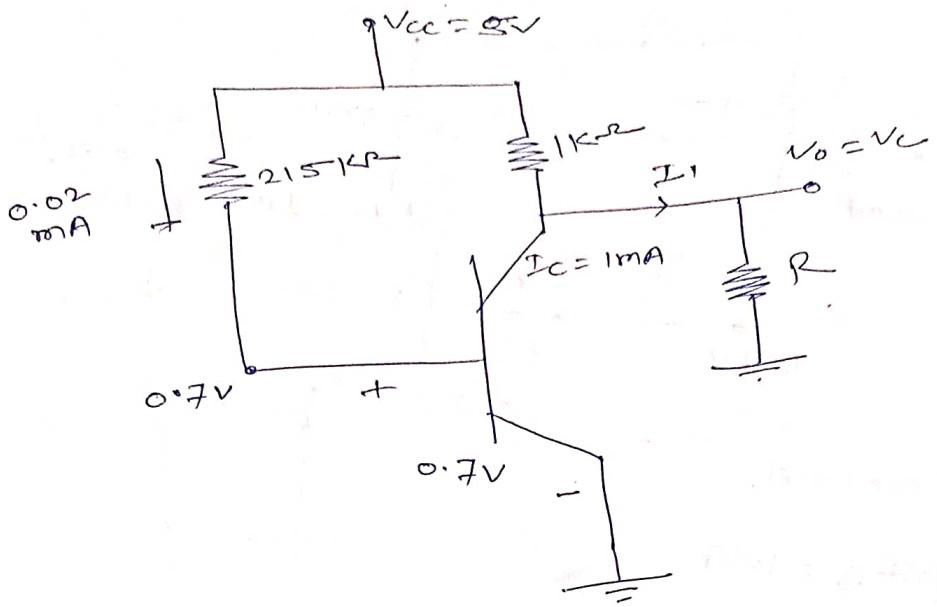

$$\frac{5-V_c}{1} = 1 + \frac{V_c}{R}$$

$$4 = V_c + \frac{V_c}{R} = V_L\left(1+\frac{1}{R}\right)$$

$$V_c = \frac{4}{(1+1/R)}$$

$$V_{CE} = \frac{4}{(1+1/R)} > 0.2 \Rightarrow \left(1+\frac{1}{R}\right) < \frac{4}{0.2}$$

$$1 + \frac{1}{R} < 20$$

$$\frac{1}{R} < 19$$

$$R > \frac{1}{19}\ K\Omega$$

$$R > \frac{1000}{19}$$

$$R > 52.63\ \Omega$$

Q) H.W

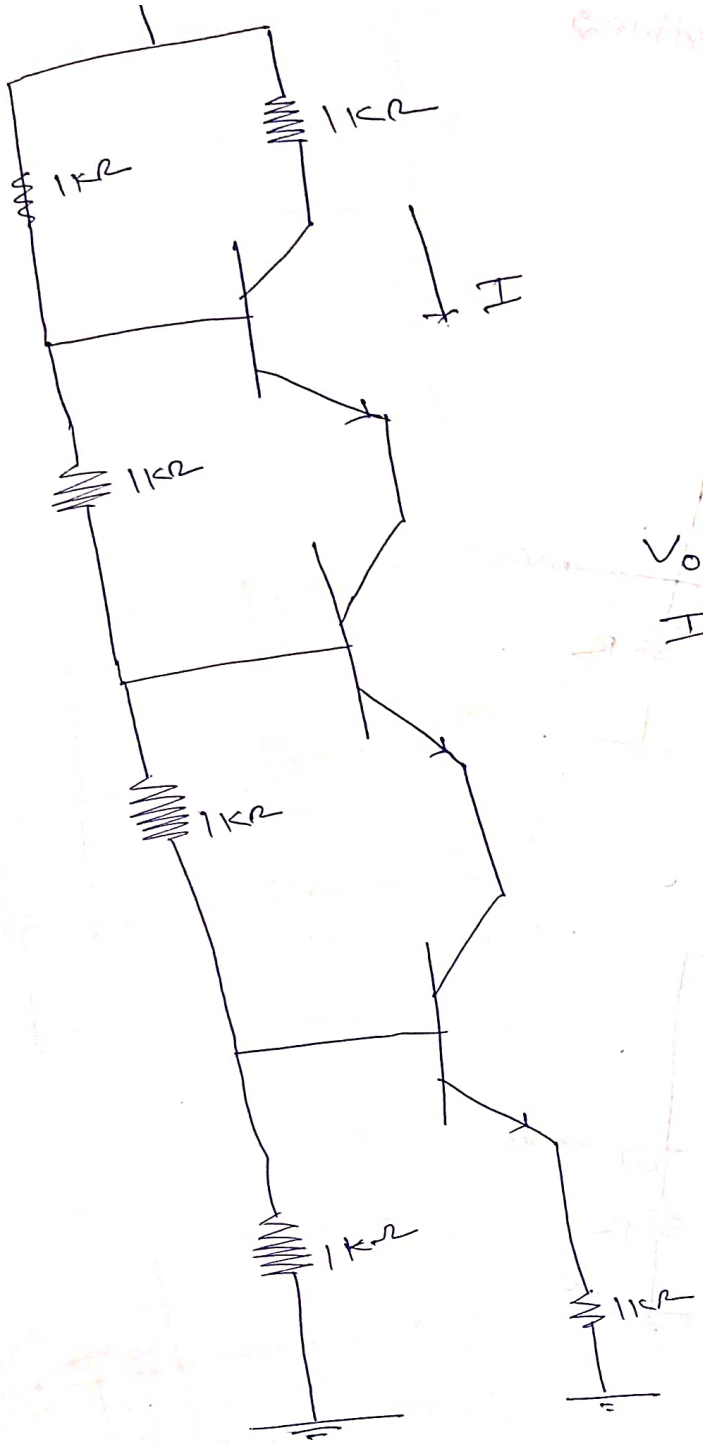

V_o = ---Volt

I = ---mA

$(V_{BE})_{active} = 0.7V$

Q)

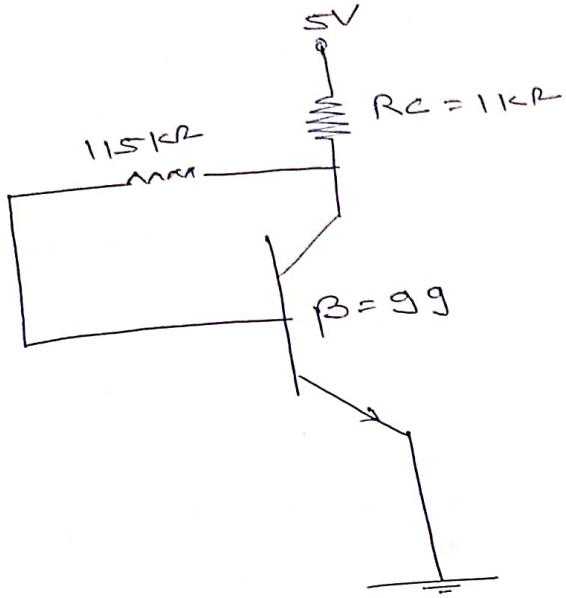

$(V_{BE})_{active} = 0.7$

$I_C = \text{---} \; mA$

Soln:-

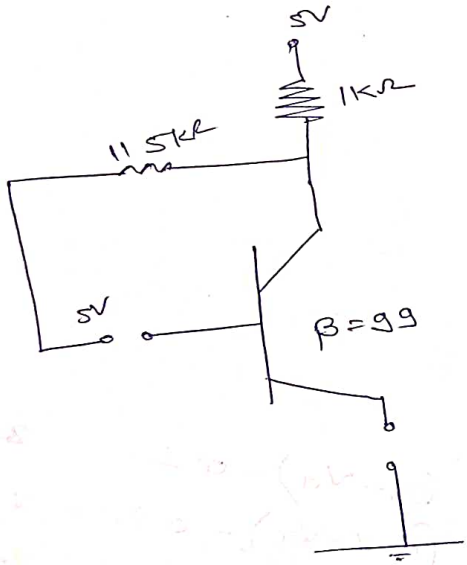

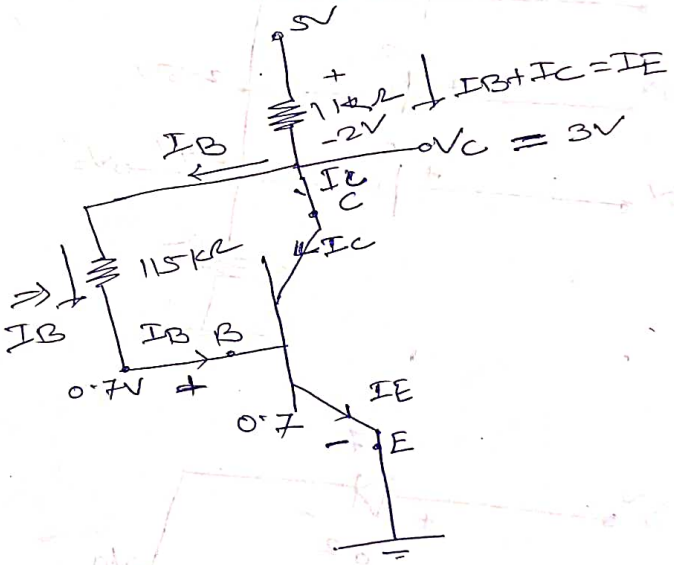

Active region.

$5 - I_E \cdot 1 - 115 I_B - 0.7 = 0$

$4.3 = 100 I_B + 115 I_B$

$I_B = \frac{4.3}{215} = 0.02 mA$

$I_C = 99 \times 0.02 = 1.98 mA$

$I_E = 2 mA.$

Ltcc

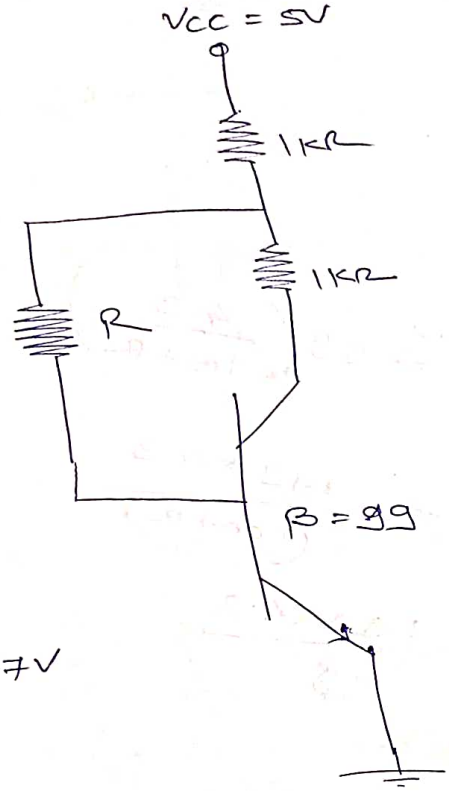

$(V_{BE})_{active} = 0.7V$

minimum value of R for which this transistor is in active region

) 100KΩ

b) 89.9KΩ

c) 78.27KΩ

d) for avg. value of R, this transistor will be in active region.

Sol:-

$I_B + I_C = I_E$

$5 - I_E - I_B R - 0.7 = 0$

$4.3 = 100 I_B + I_B R$

$I_B = \frac{4.3}{100 + R}$

$$I_C = 99\left(\frac{4.3}{100+R}\right)$$

$$I_E = 100\left(\frac{4.3}{100+R}\right)$$

$$V_C = 5 - I_E - I_C$$

$$V_{CE} = V_C - I_E = V_C = 5 - 99\left(\frac{4.3}{100+R}\right) - 100\left(\frac{4.3}{100+R}\right)$$

$$= 5 - \frac{199 \times 4.3}{(100+R)}$$

$$(100+R) > \frac{199 \times 4.3}{4.8}$$

$$R > 78.27\ k\Omega$$

$$R_{min} = 78.27\ k\Omega$$

Q)

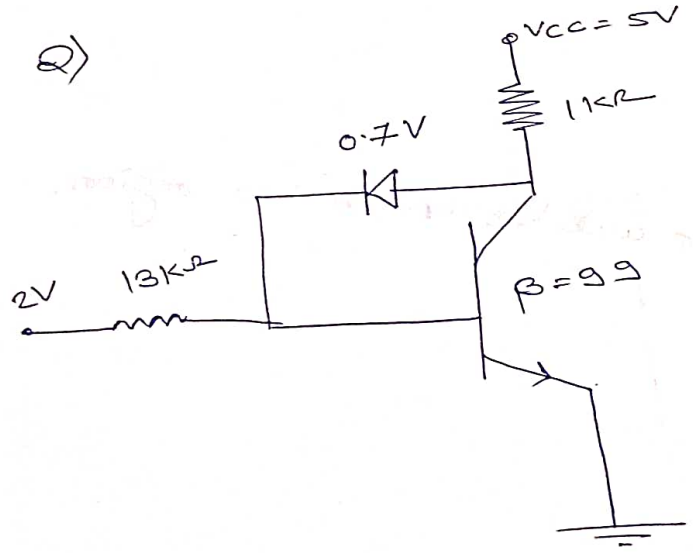

i) Region of operation

I_C, I_E ?

Sol:-

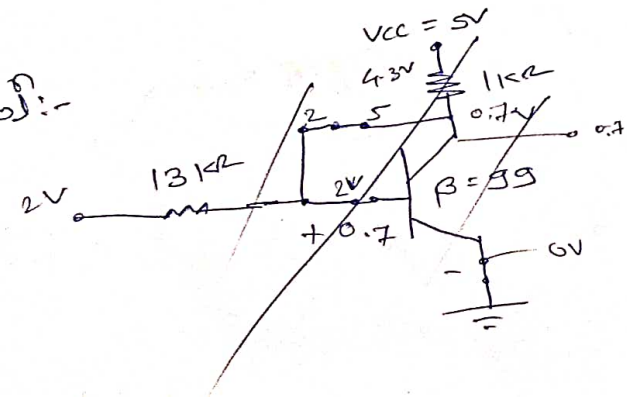

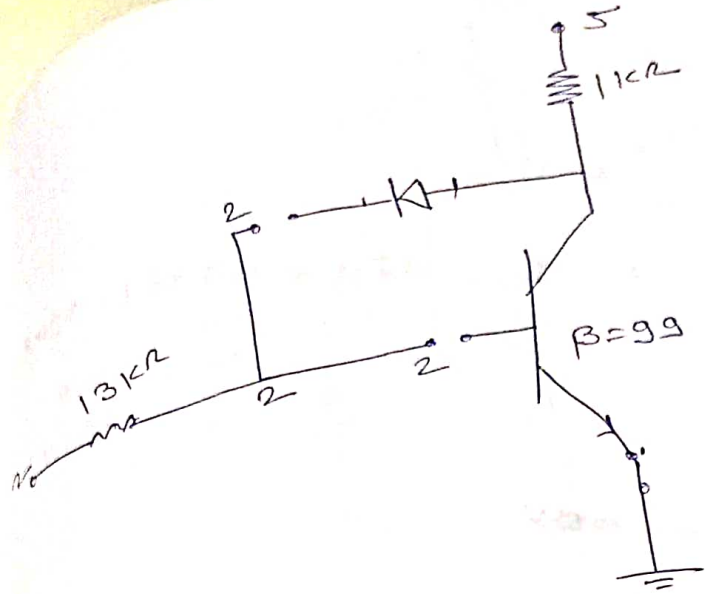

D1 - ON , BJT ON

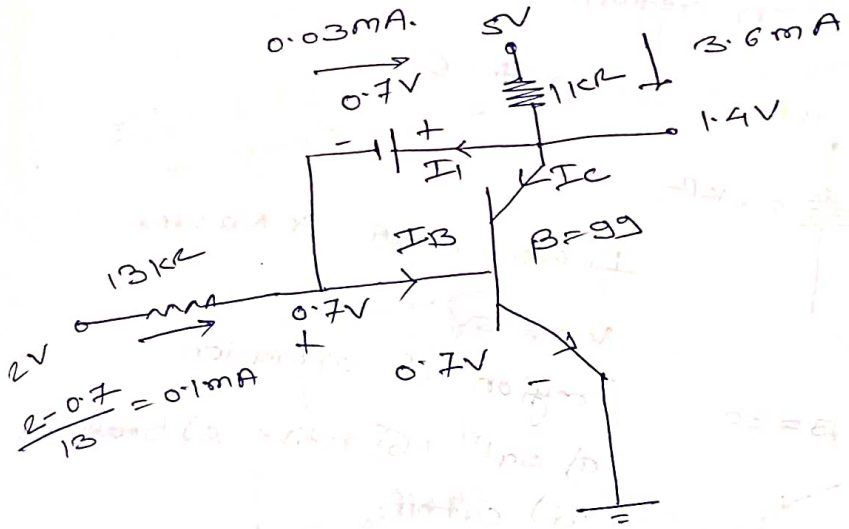

$I_1 = 3.6 - I_C$

$I_1 = 3.6 - \beta I_B$

$I_B = 3.6 - \beta I_B + 0.1$

$(\beta+1) I_B = 3.7$

$I_B = 0.037\ mA$

$I_C = 99 \times 0.037\ mA.$

$= 3.66\ mA.$

$I_1 = -0.06\ mA$ ∴ D1 off.

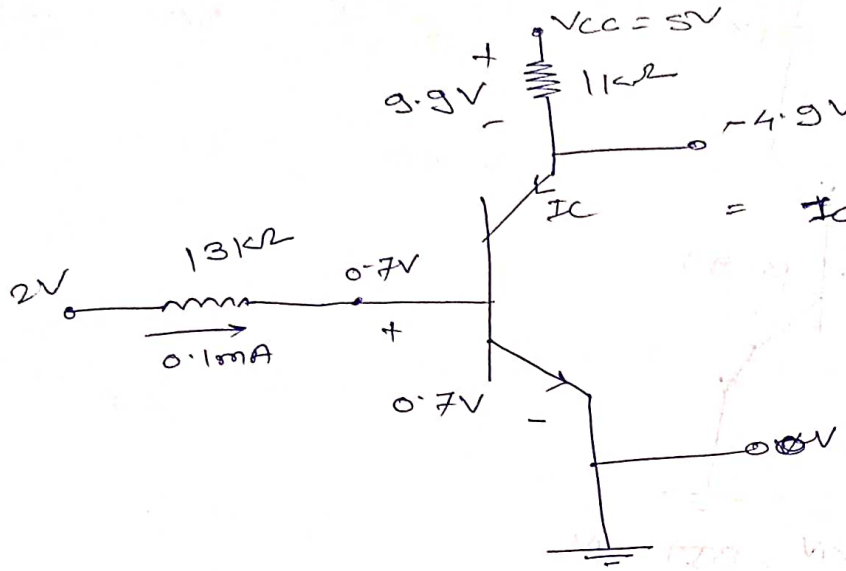

$= I_C = \beta I_B = 99 \times 0.1 = 9.9mA$

saturation region.

Lect-6

Q)

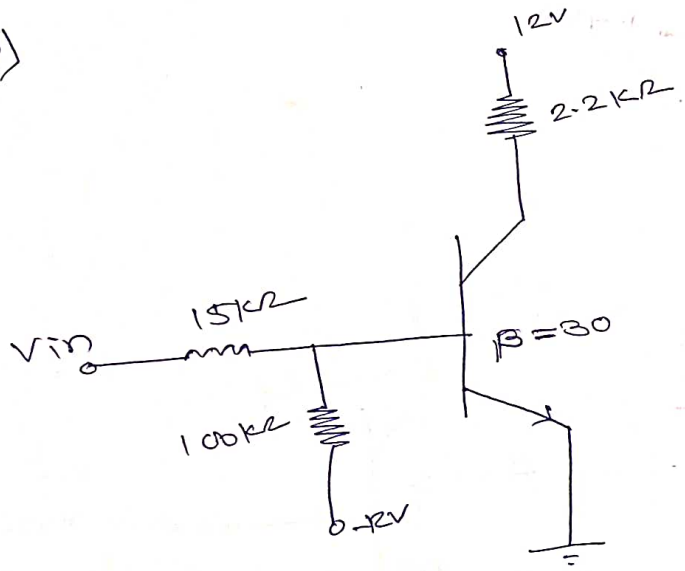

$I_{CBO} = 20nA$ X No used.

$V_{in} = 5V$

region of operation

a) sat^n b) active c) breakdown

d) cut off.

Sol^n:-

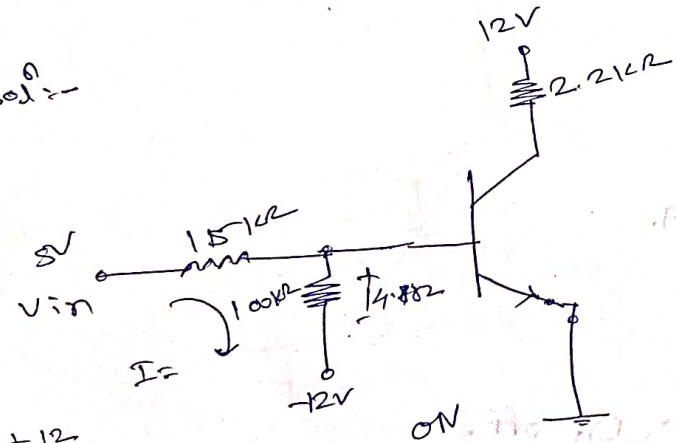

$\frac{5+12}{115}$

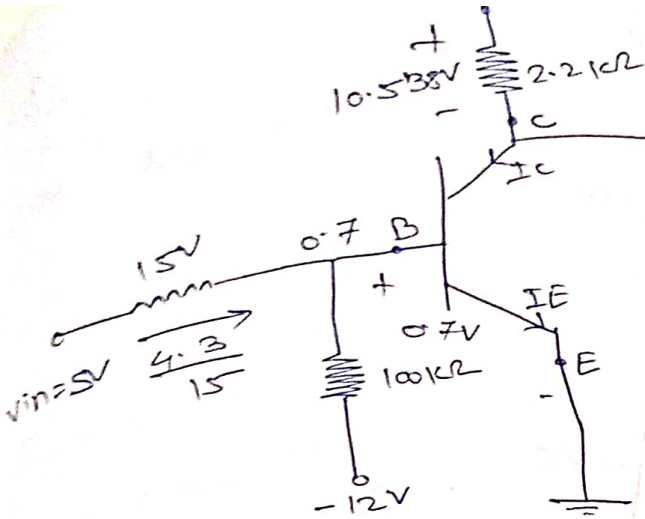

$V_C = 1.462V > 0.2$
Active region

$$I_B = \frac{4.3}{15} - \frac{12.7}{100} = 0.159mA.$$

$$I_C = \beta I_B$$
$$= 30 \times I_B = 30 \times 0.159 = 4.79mA.$$

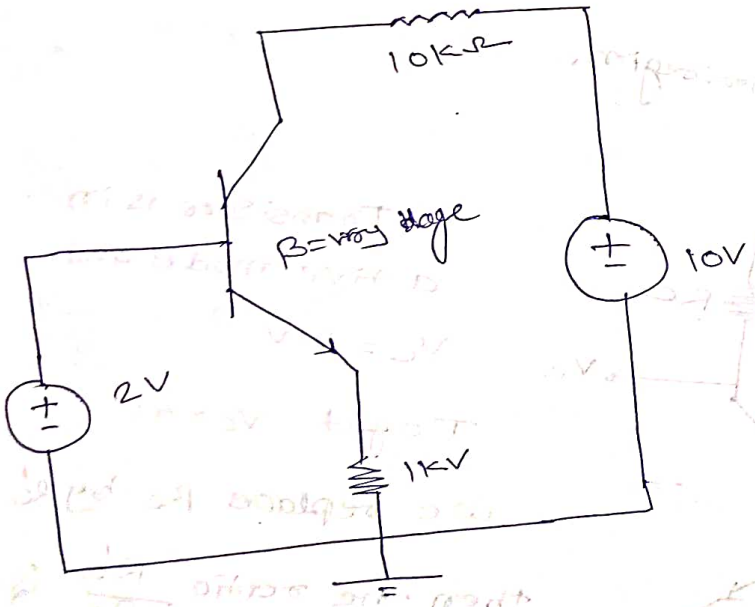

$V_{BE} = 0.7V$

a) cutoff b) saturation c) Normal active d) reverse active.

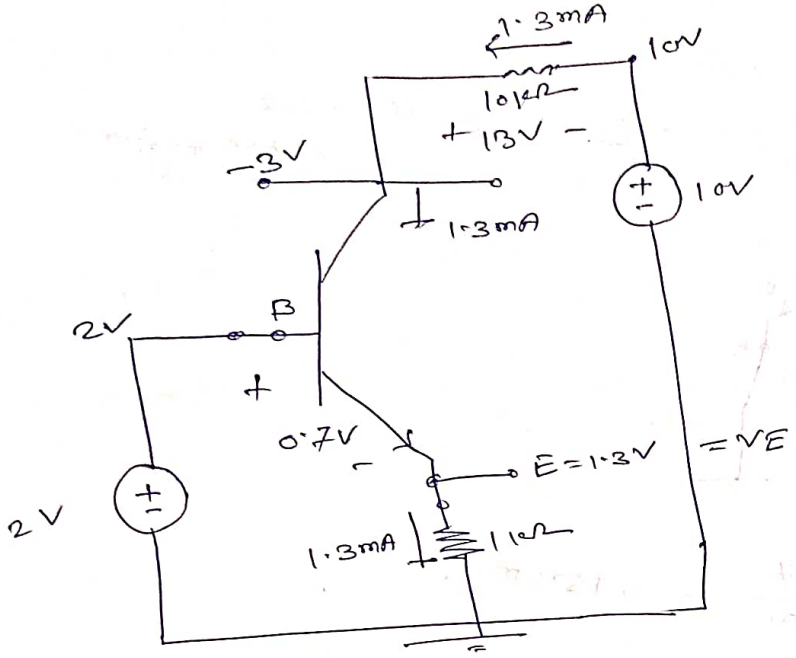

Active $I_B \rightarrow 0$

$I_E \approx I_C$

$V_{CE} = -4.3V \not> 0.2V$

~~Not a~~ saturation region.

Q)

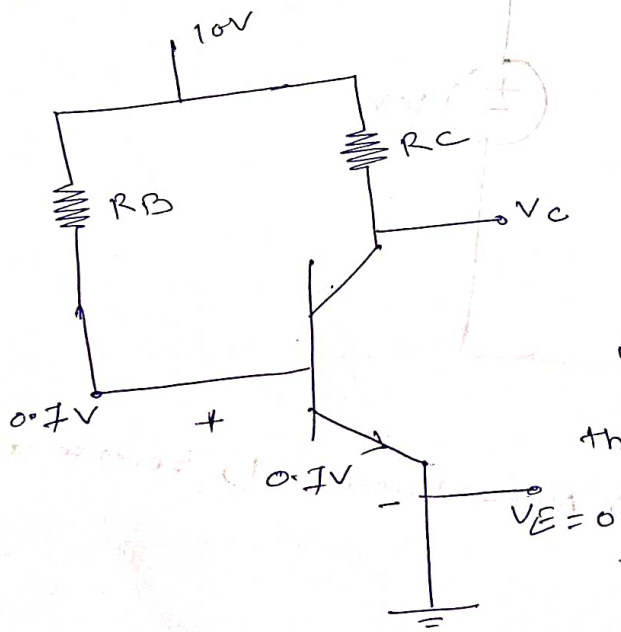

Transistor is in active mode and $V_C = 2V$

To get $V_C = 4V$

we replace R_C by R_C'

then the ratio $\frac{R_C'}{R_C}$ is ____

ol:-

case :- $V = 2V$

$$\frac{10 - V_C}{R_C} = I_C = \frac{10-2}{R_C} = \frac{8}{R_C}$$

$$I_C = \beta I_B$$

$$\Rightarrow I_B = \frac{0.3}{R_B}$$

case - $V = 4V$ =

$$I_C' = \frac{6}{R_C'}$$

$$I_C = I_C'$$

$$\frac{8}{R_C} = \frac{6}{R_C'}$$

$$\frac{R_C'}{R_C} = \frac{6}{8}$$

$$\frac{R_C'}{R_C} = 0.75$$

Q)

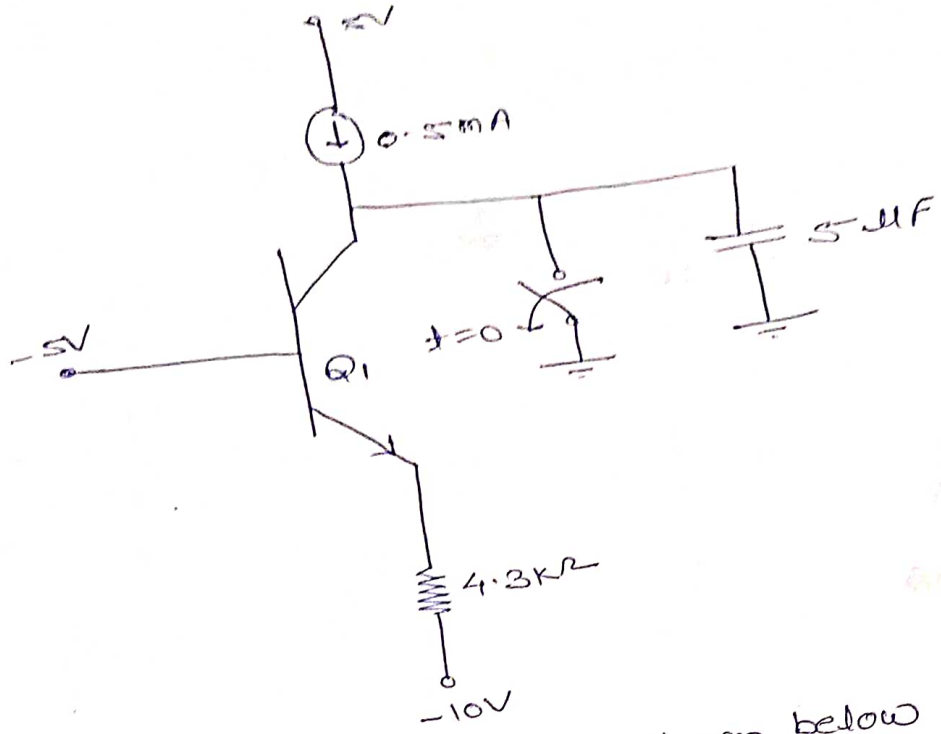

for the BJT Q_1 in the ckt shown below

$\beta = \infty$, $(V_B)_{ON/active} = 0.7V$, $(V_{CE})_{sat} = 0.7V$

The switch is initially close at the time $t = 0$ the switch is opened. at time t at which Q_1 leaves the active region.

a) 10 msec

b) 25 msec

c) 50 msec

d) 100 msec.

Sol:. Initially

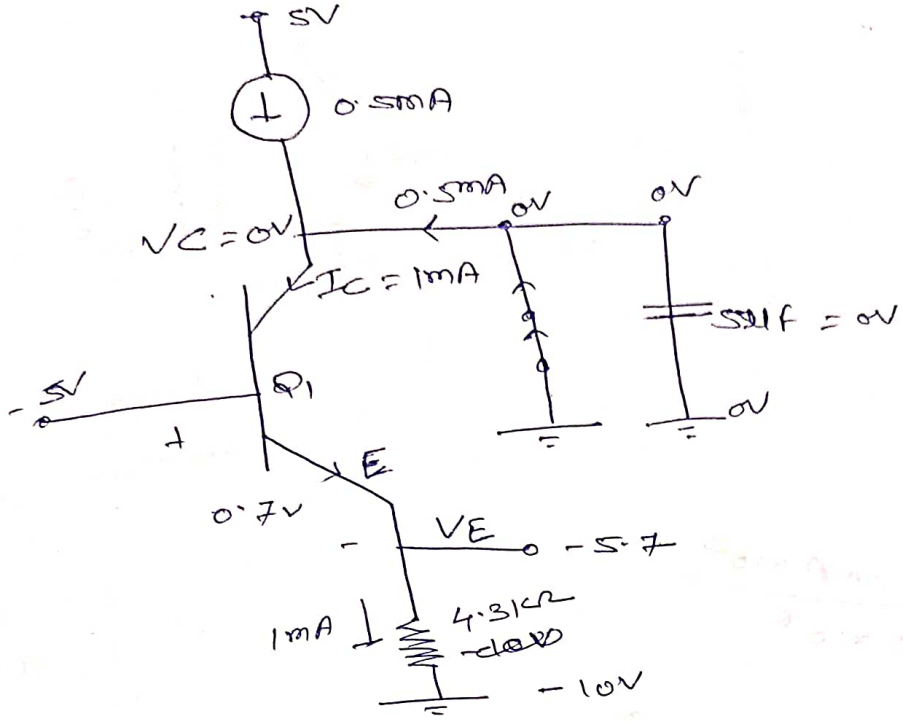

t = 0

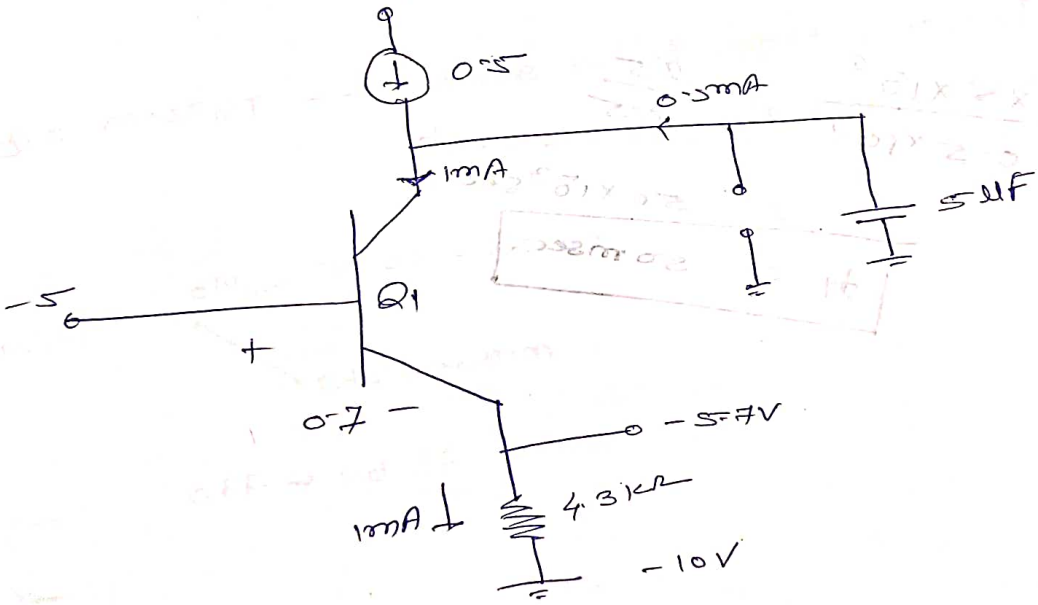

$$I_C = \frac{C\,dV_{C1}}{dt}$$

$$\frac{I_C}{C} = \frac{dV_{C1}}{dt}$$

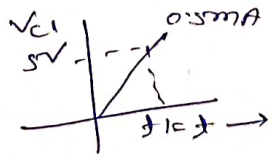

$V_{CE} = 0.7$

$V_C = V_E + 0.7$

$V_C = -V_{C1}$

$V_C = -5V$

$-V_{C1} = -5$

$V_{C1} = 5V$

$$\frac{dV_{C1}}{dt} = \frac{I_C}{C} = \frac{0.5mA \times 10^{-3}}{5 \times 10^{-6}}$$

$$= \frac{5-0}{t_1 - 0} = \frac{0.5 \times 10^{-3}}{5 \times 10^{-6}}$$

$$t_1 = \frac{5 \times 5 \times 10^{-6}}{0.5 \times 10^{-3}} = \frac{25}{0.5}$$

$$= 50 \times 10^{-3} sec$$

$$\boxed{t_1 = 50 msec.}$$