REVISIONS				
ZONE	REV	DESCRIPTION	DATE	APPROVED

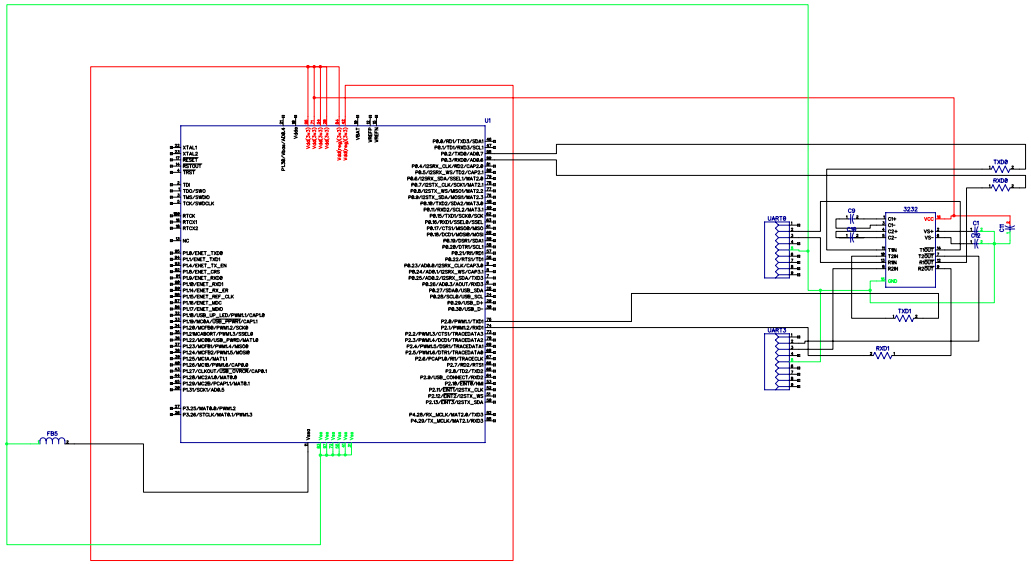

SIZE	FSCM NO.	DWG NO.		REV
SCALE			Sheet 1	