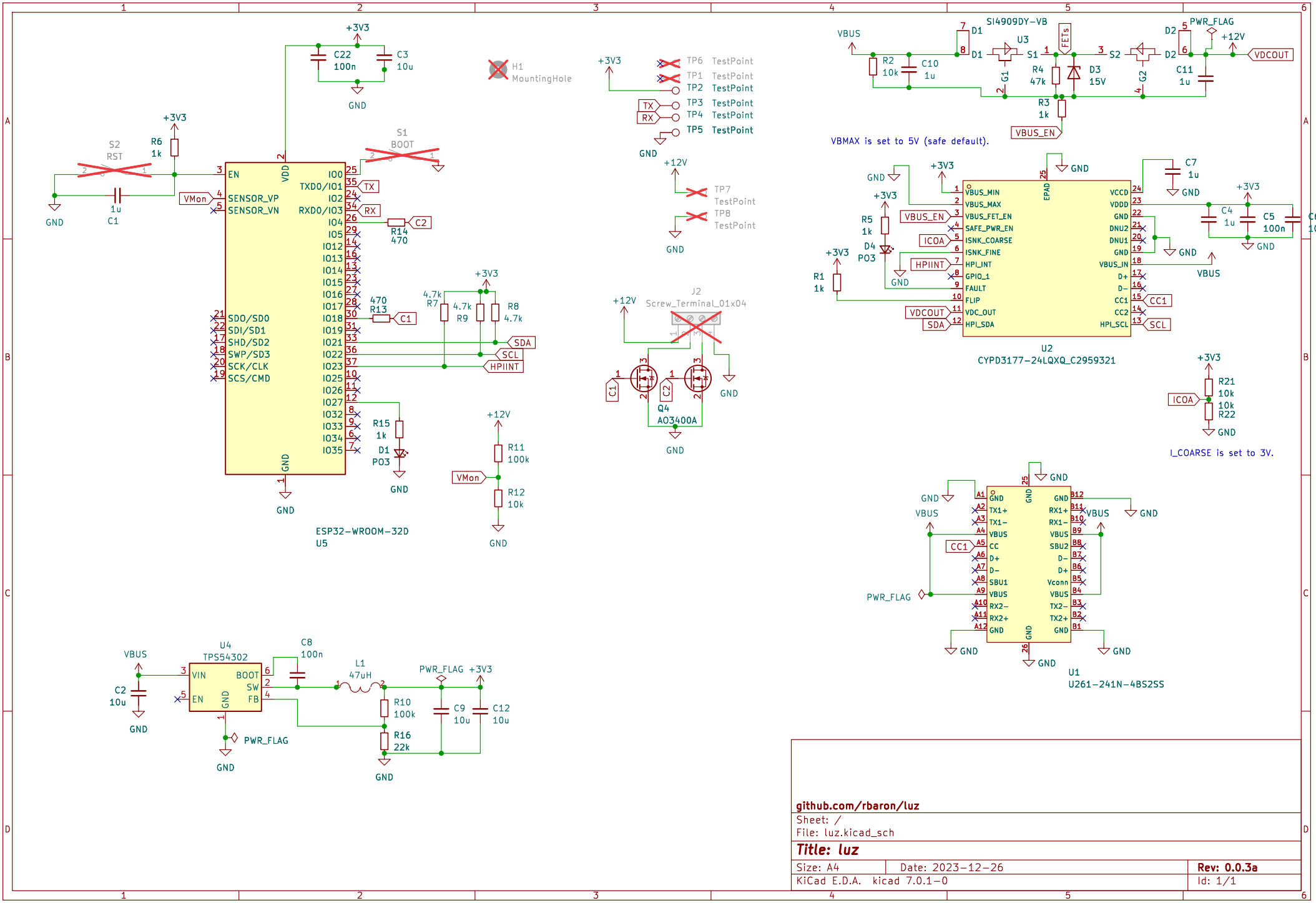
ESP32-WROOM-32D
U5
EN
VDD
SENSOR_VP
SENSOR_VN
SDO/SD0
SDI/SD1
SHD/SD2
SWP/SD3
SCK/CLK
SCS/CMD
GND
IO0
TXD0/IO1
IO2
RXD0/IO3
IO4
IO5
IO12
IO13
IO14
IO15
IO16
IO17
IO18
IO19
IO21
IO22
IO23
IO25
IO26
IO27
IO32
IO33
IO34
IO35
S2
RST
S1
BOOT
H1
MountingHole
TP6 TestPoint
TP1 TestPoint
TP2 TestPoint
TP3 TestPoint
TP4 TestPoint
TP5 TestPoint
TP7 TestPoint
TP8 TestPoint
J2
Screw_Terminal_01x04
Q4
AO3400A
SI4909DY-VB
U3
FETs
PWR_FLAG
VBMAX is set to 5V (safe default).
U2
CYPD3177-24LQXQ_C2959321
VBUS_MIN
VBUS_MAX
VBUS_FET_EN
SAFE_PWR_EN
ISNK_COARSE
ISNK_FINE
HPI_INT
GPIO_1
FAULT
FLIP
VDC_OUT
HPI_SDA
VCCD
VDDD
DNU2
DNU1
VBUS_IN
D+
D-
CC1
CC2
HPI_SCL
EPAD
I_COARSE is set to 3V.
U1
U261-241N-4BS2SS
U4
TPS54302
VIN
EN
BOOT
SW
FB
github.com/rbaron/luz
Sheet: /
File: luz.kicad_sch
Title: luz
Size: A4
Date: 2023-12-26
Rev: 0.0.3a
KiCad E.D.A. kicad 7.0.1-0
Id: 1/1