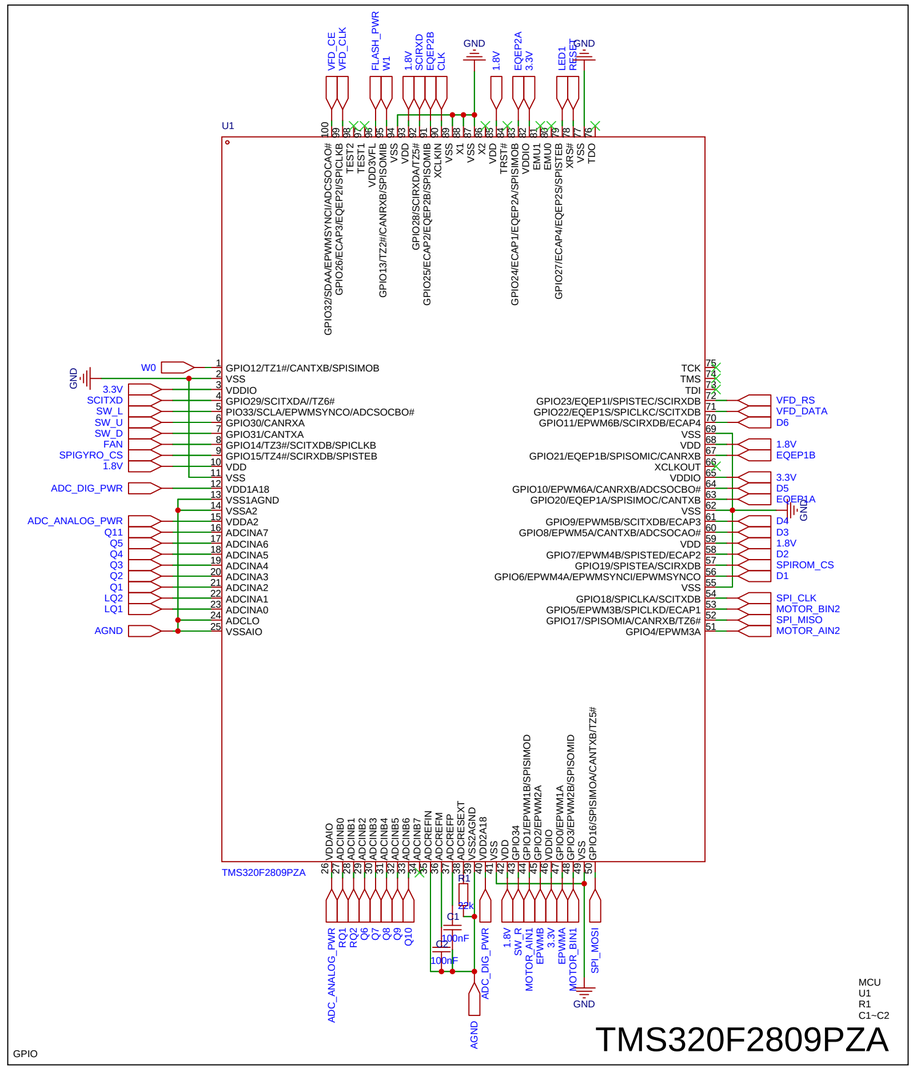

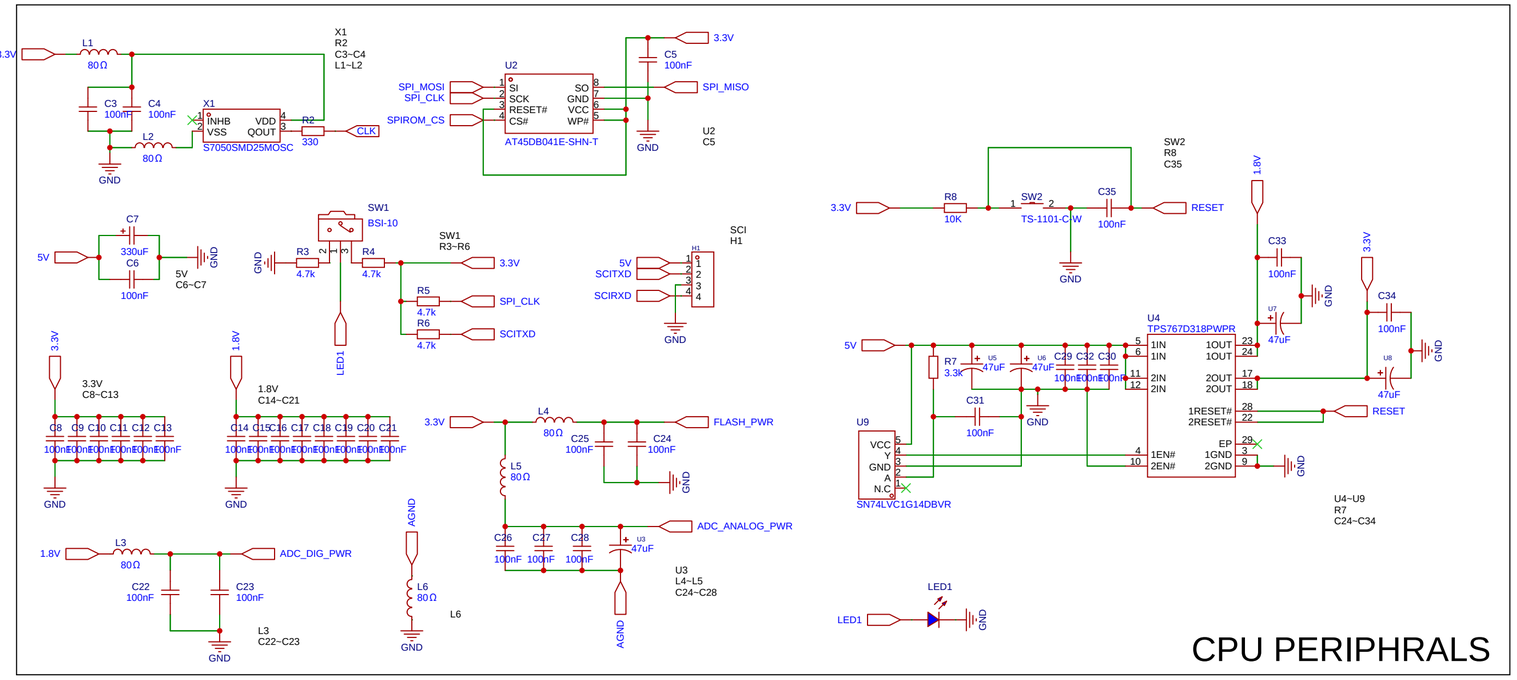

Schematic	Schematic1	Create at	2025-09-01
		Update at	2025-11-08
Board	Board1	Page	MCU
Drawn	JP_Board		
Reviewed			
		Version	Size	Page 1 Total 3
EasyEDA		V1.0	A4	EasyEDA.com

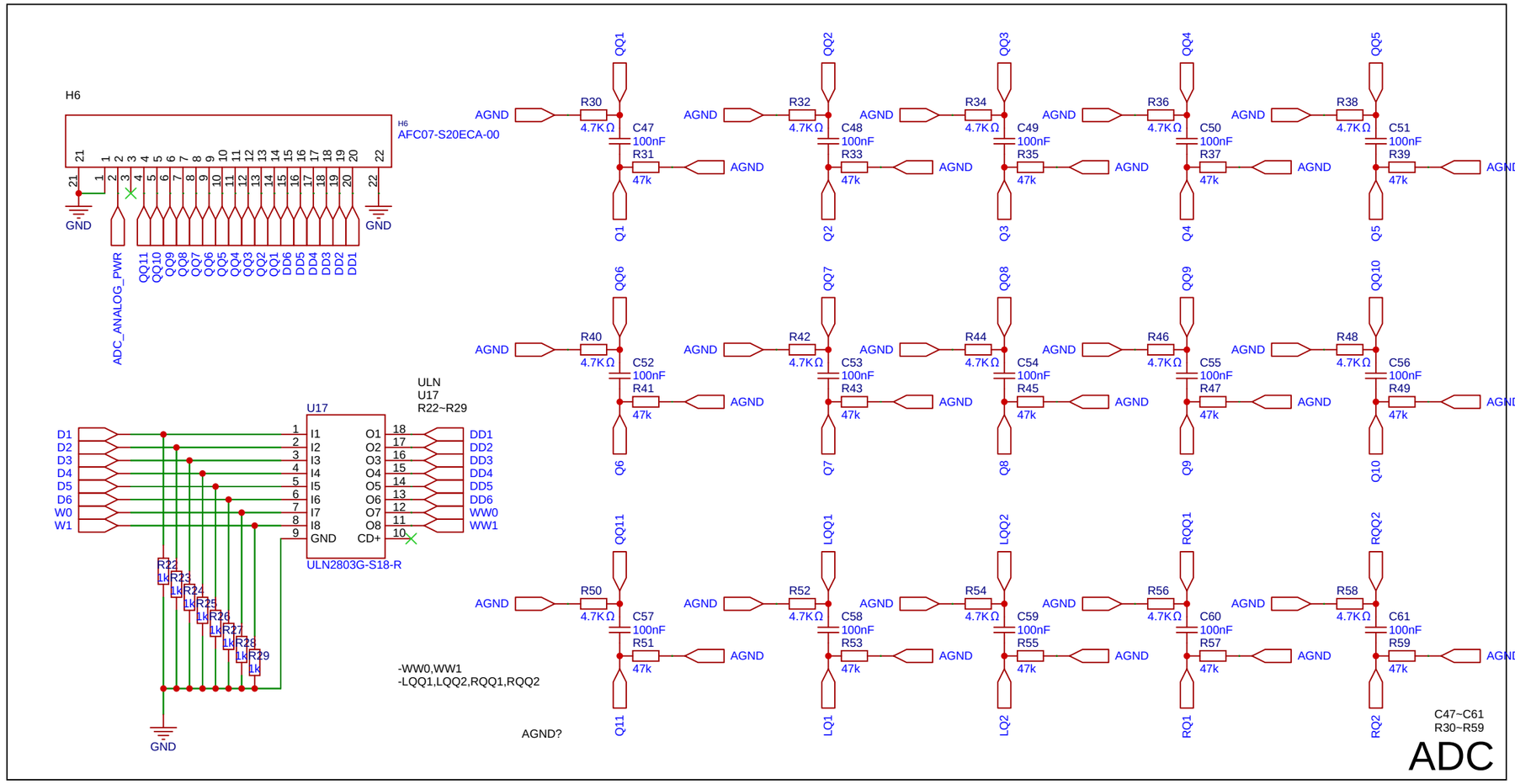

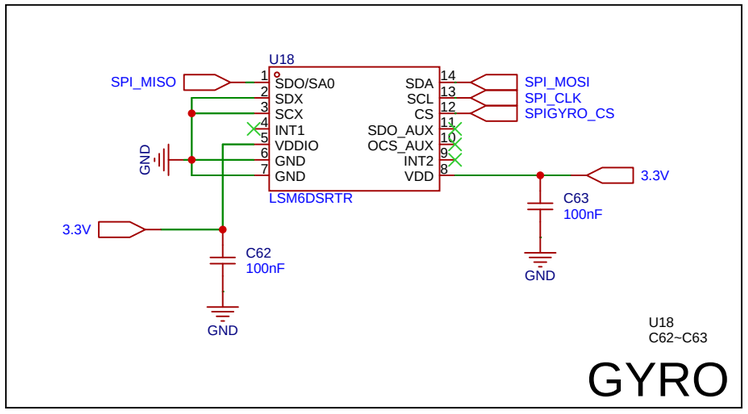

Schematic	Schematic1	Create at	2025-09-11
		Update at	2025-11-08
Board	Board1	Page	SENSOR
Drawn	JP_Board		
Reviewed			
		Version	Size	Page 2 Total 3
EasyEDA		V1.0	A4	EasyEDA.com

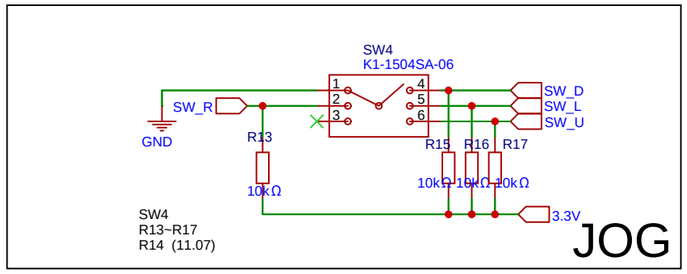

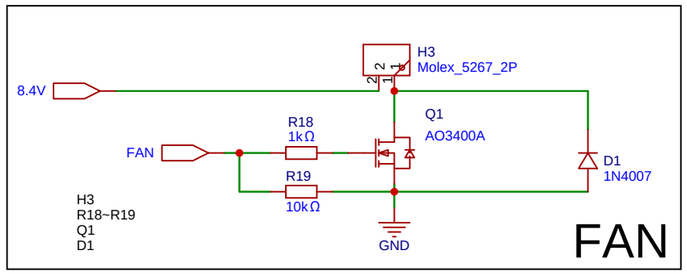

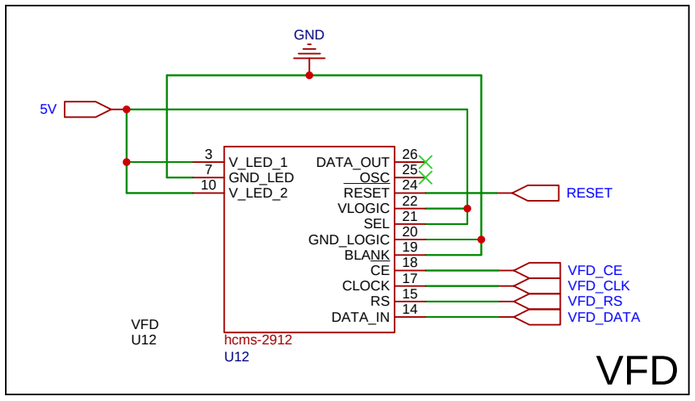

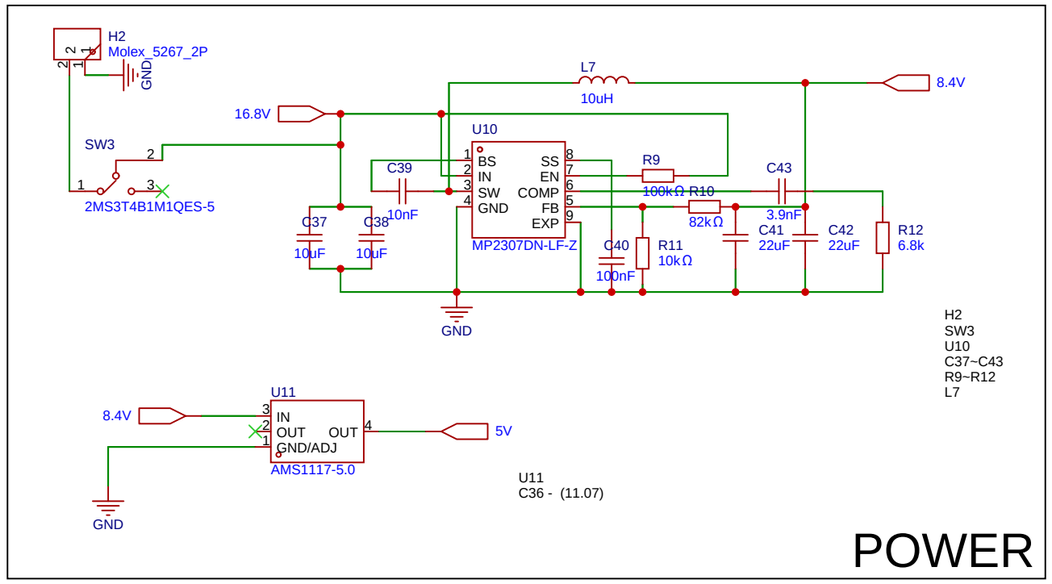

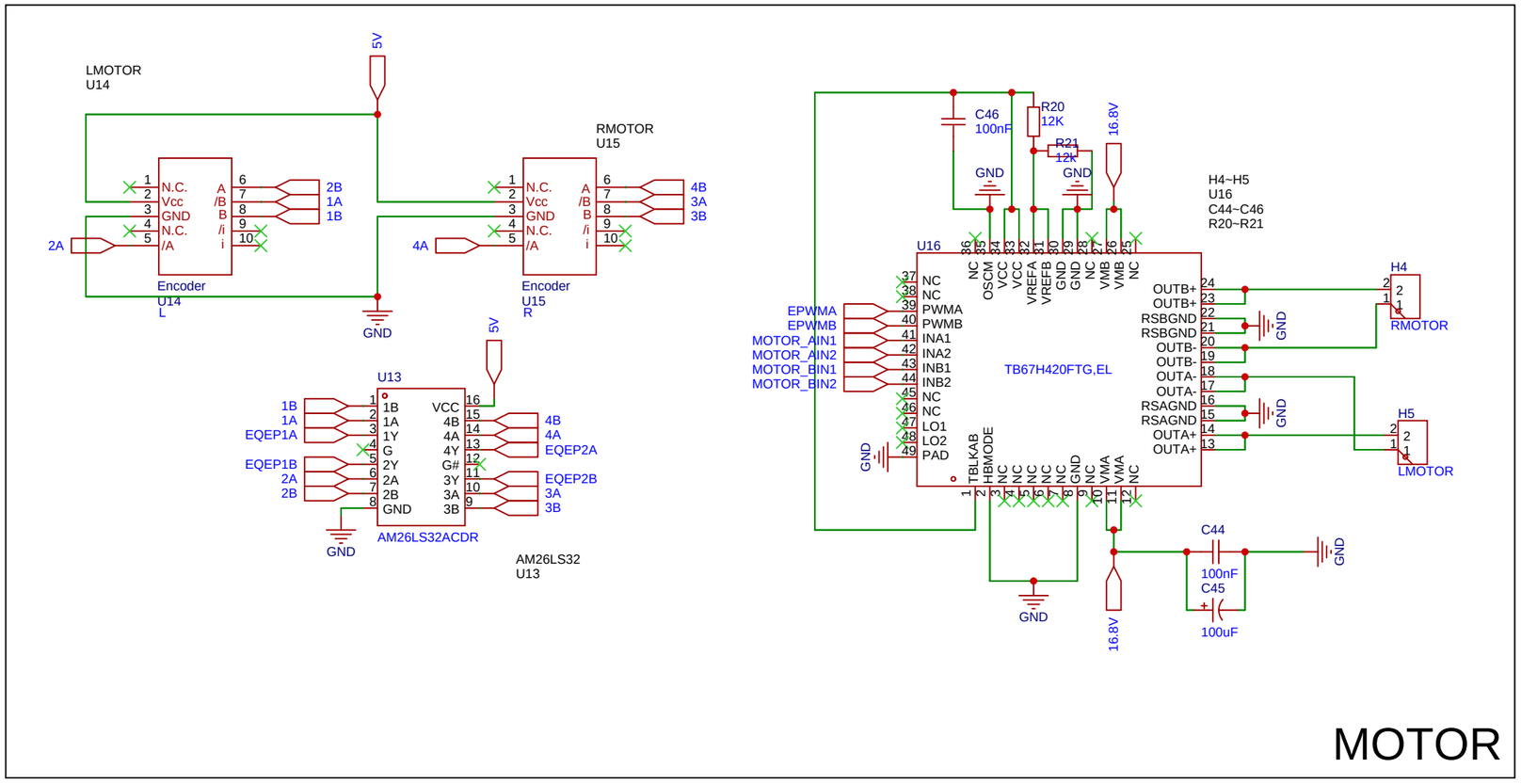

Schematic	Schematic1	Create at	2025-09-11
		Update at	2025-11-10
Board	Board1	Page	etc
Drawn	JP_Board		
Reviewed			
		Version	Size	Page 3 Total 3
EasyEDA		V1.0	A4	EasyEDA.com