DUAL-OUTPUT LOW-DROPOUT VOLTAGE REGULATORS

FEATURES

- **Dual Output Voltages for Split-Supply Applications**
- **Output Current Range of 0mA to 1.0A per Regulator**
- **3.3V/2.5V, 3.3V/1.8V, and 3.3V/Adjustable Output**
- **Fast-Transient Response**
- **2% Tolerance Over Load and Temperature**
- **Dropout Voltage Typically 350mV at 1A**
- **Ultra-low 85µA Typical Quiescent Current**
- **1µA Quiescent Current During Shutdown**
- **Dual Open-Drain Power-On Reset with 200ms Delay for Each Regulator**
- **28-Pin PowerPAD™ TSSOP Package**
- **Thermal Shutdown Protection for Each Regulator**

DESCRIPTION

The TPS767D3xx family of dual voltage regulators offers fast transient response, low dropout voltages and dual outputs in a compact package and incorporating stability with 10µF low ESR output capacitors.

The TPS767D3xx family of dual voltage regulators is designed primarily for DSP applications. These devices can be used in any mixed-output voltage application, with each regulator supporting up to 1A. Dual active-low reset signals allow resetting of core-logic and I/O separately.

Because the PMOS device behaves as a low-value resistor, the dropout voltage is very low (350mV typically at an output current of 1A for the TPS767D325) and is directly proportional to the output current. Additionally, since the PMOS pass element is a voltage-driven device, the quiescent current is very low and independent of output loading (typically 85µA over the full range of output current, 0mA to 1A). These two key specifications yield a significant improvement in operating life for battery-powered systems. This LDO family also features a sleep mode; applying a TTL high signal to $\overline{EN}$ (enable) shuts down the regulator, reducing the quiescent current to 1µA at T_J = +25°C.

The $\overline{RESET}$ output of the TPS767D3xx initiates a reset in microcomputer and microprocessor systems in the event of an undervoltage condition. An internal comparator in the TPS767D3xx monitors the output voltage of the regulator to detect an undervoltage condition on the regulated output voltage.

The TPS767D3xx is offered in 1.8V, 2.5V, and 3.3V fixed-voltage versions and in an adjustable version (programmable over the range of 1.5V to 5.5V). Output voltage tolerance is specified as a maximum of 2% over line, load, and temperature ranges. The TPS767D3xx family is available in a 28-pin PWP TSSOP package. They operate over a junction temperature range of –40°C to +125°C.

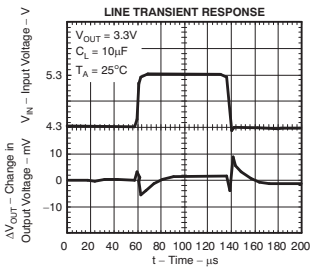

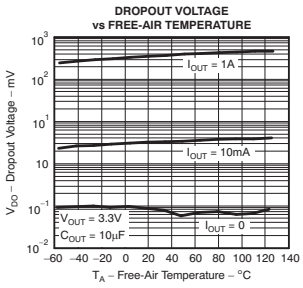

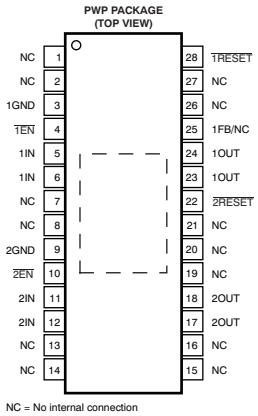

Please be aware that an important notice concerning availability, standard warranty, and use in critical applications of Texas Instruments semiconductor products and disclaimers thereto appears at the end of this data sheet.

PowerPAD is a trademark of Texas Instruments.
All other trademarks are the property of their respective owners.

PRODUCTION DATA information is current as of publication date. Products conform to specifications per the terms of the Texas Instruments standard warranty. Production processing does not necessarily include testing of all parameters.

Copyright © 1999–2008, Texas Instruments Incorporated

This integrated circuit can be damaged by ESD. Texas Instruments recommends that all integrated circuits be handled with appropriate precautions. Failure to observe proper handling and installation procedures can cause damage.

ESD damage can range from subtle performance degradation to complete device failure. Precision integrated circuits may be more susceptible to damage because very small parametric changes could cause the device not to meet its published specifications.

AVAILABLE OPTIONS(1)

DEVICE	REGULATOR 1 V_{OUT} (V)	REGULATOR 2 V_{OUT} (V)
TPS767D301	Adjustable (1.5V – 5.5V)	3.3V
TPS767D318	1.8V	3.3V
TPS767D325	2.5V	3.3V

(1) For the most current specifications and package information see the Package Option Addendum at the end of this document, or see the TI web site at www.ti.com.

ABSOLUTE MAXIMUM RATINGS(1)

Over operating temperature range (unless otherwise noted).

	TPS767D3xx	UNIT
Input voltage range, V_{1IN}, V_{2IN}(2)	–0.3 to +13.5	V
Enable voltage range, $V_{\overline{1EN}}$, $V_{\overline{2EN}}$	–0.3 to V_{IN} + 0.3	V
Output voltage range, V_{1OUT}, V_{2OUT}	–0.3 to +7.0	V
$\overline{RESET}$ voltage range, $V_{\overline{1RESET}}$, $V_{\overline{2RESET}}$	–0.3 to +16.5	V
Peak output current	Internally limited	
ESD rating, HBM	2	kV
Continuous total power dissipation	See Dissipation Ratings table	
Operating junction temperature range, T_J	–40 to +125	°C
Storage temperature range, T_{stg}	–65 to +150	°C

(1) Stresses beyond those listed under *absolute maximum ratings* may cause permanent damage to the device. These are stress ratings only, and functional operation of the device at these or any other conditions beyond those indicated under *recommended operating conditions* is not implied. Exposure to absolute-maximum-rated conditions for extended periods may affect device reliability.
(2) All voltage values are with respect to network terminal ground.

POWER DISSIPATION RATINGS

PACKAGE	AIR FLOW (CFM)	T_A ≤ +25°C POWER RATING	DERATING FACTOR ABOVE t_a = +25°C	T_A = +70°C POWER RATING	T_A = +85°C POWER RATING
PWP(1)	0	3.58 W	35.8 mW/°C	1.97 W	1.43 W
	250	5.07 W	50.7 mW/°C	2.79 W	2.03 W

(1) This parameter is measured with the recommended copper heat sink pattern on a 4-layer PCB, 1oz. copper on 4-in × 4-in ground layer. For more information, refer to TI technical brief literature number SLMA002.

Copyright © 1999–2008, Texas Instruments Incorporated

ELECTRICAL CHARACTERISTICS

Over operating temperature range (T_J = –40°C to +125°C), V_{IN} = $V_{OUT(nom)}$ + 1V, I_{OUT} = 1mA, $V_{\overline{EN}}$ = 0V, and C_{OUT} = 10µF, unless otherwise noted. Adjustable channels are set to V_{OUT} = 3.3V. Typical values are at T_J = 25°C.

PARAMETER		TEST CONDITIONS	MIN	TYP	MAX	UNIT
V_{IN}	Input voltage range, V_{1IN}, V_{2IN} (1)		2.7		10	V
V_{OUT}	Adjustable V_{OUT} range, V_{1OUT}, V_{2OUT}		1.5		5.5	V
	Accuracy, adjustable V_{OUT} channels (1)	V_{OUT} + 1V ≤ V_{IN} ≤ 5.5V; 10 µA ≤ I_{OUT} ≤ 1A	–2.0		+2.0	%
	Accuracy, fixed V_{OUT} channels (1)	V_{OUT} + 1V ≤ V_{IN} ≤ 10V; 10 µA ≤ I_{OUT} ≤ 1A	–2.0		+2.0	%
$\Delta V_{OUT}\%/\Delta V_{IN}$	Line regulation (1)	V_{OUT} + 1.0V ≤ V_{IN} ≤ 10V		0.01		%/V
$\Delta V_{OUT}\%/\Delta I_{OUT}$	Load regulation	10 µA ≤ I_{OUT} ≤ 1A		3		mV
V_{DO}	Dropout voltage (2) (V_{IN} = V_{OUT} (nom) – 0.1V)	V_{OUT} = 3.3V, I_{OUT} = 1A		350	575	mV
I_{CL}	Output current limit, per LDO	V_{OUT} = 0V, T_J = +25°C		1.7	2	A
I_{GND}	Ground pin current, per LDO	10µA ≤ I_{OUT} ≤ 1A		85	125	µA
I_{SHDN}	Standby current, per LDO	2.7V ≤ V_{IN} ≤ 10V, $V_{\overline{EN}}$ = V_{IN}		1	10	µA
I_{FB}	FB current input (Adjustable)	V_{FB} = 1.5V		2		nA
PSRR	Power-supply ripple rejection	f = 1kHz, C_{OUT} = 10µF		60		dB
V_N	Output noise voltage	BW = 200Hz to 100kHz, V_{OUT} = 1.8V, I_C = 1A, C_{OUT} = 10µF		55		μV_{RMS}
$V_{EN(HI)}$	High-level enable input voltage	T_J = +25°C	2.0			V
$V_{EN(LO)}$	Low-level enable input voltage	T_J = +25°C			0.8	V
$I_{\overline{EN}}$	Input current	$V_{\overline{EN}}$ = 0V, T_J = +25°C	–1	0	1	µA
		$V_{\overline{EN}}$ = V_{IN}, T_J = +25°C	–1		1	
Reset	Minimum input voltage for valid $\overline{RESET}$	$I_{OUT(\overline{RESET})}$ = 300µA		1.1		V
	Trip threshold voltage	V_{OUT} decreasing, T_J = +25°C	92		98	$\%V_{OUT}$
	Hysteresis voltage	Measured at V_{OUT}		0.5		$\%V_{OUT}$
	Output low voltage	V_I = 2.7V, T_J = +25°C, $I_{OUT(\overline{RESET})}$= 1mA		0.15	0.4	V
	Leakage current	$V_{(\overline{RESET})}$ = 7V, T_J = +25°C			1	µA
	$\overline{RESET}$ time-out delay	T_J = +25°C	100	200	400	ms
T_{SD}	Thermal shutdown temperature			150		°C
T_J	Operating junction temperature		–40		+125	°C

(1) Minimum V_{IN} = V_{OUT} + V_{DO} or 2.7V, whichever is greater.
(2) Dropout voltage (V_{DO}) is not measured for channels with $V_{OUT(nom)}$ < 2.8V since minimum V_{IN} = 2.7V.

Copyright © 1999–2008, Texas Instruments Incorporated

FUNCTIONAL BLOCK DIAGRAM—Fixed Voltage Version (one regulator channel)

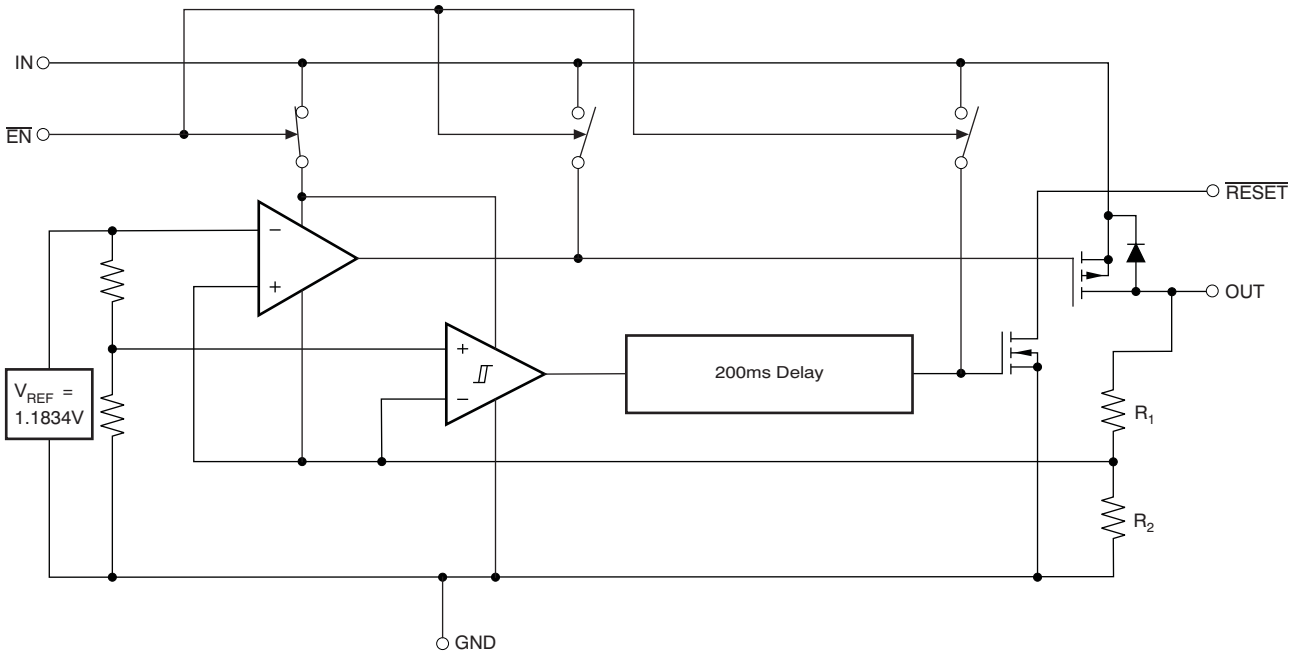

FUNCTIONAL BLOCK DIAGRAM—Adjustable Version (one regulator channel)

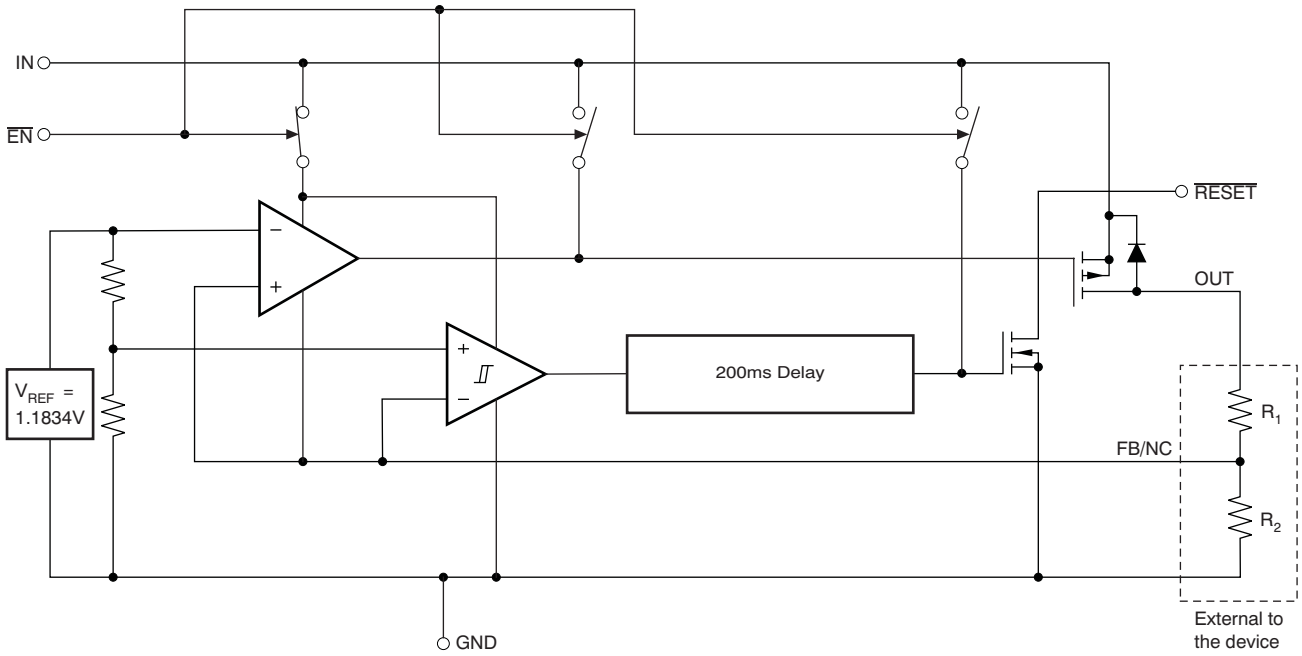

Copyright © 1999–2008, Texas Instruments Incorporated

PWP PACKAGE
(TOP VIEW)

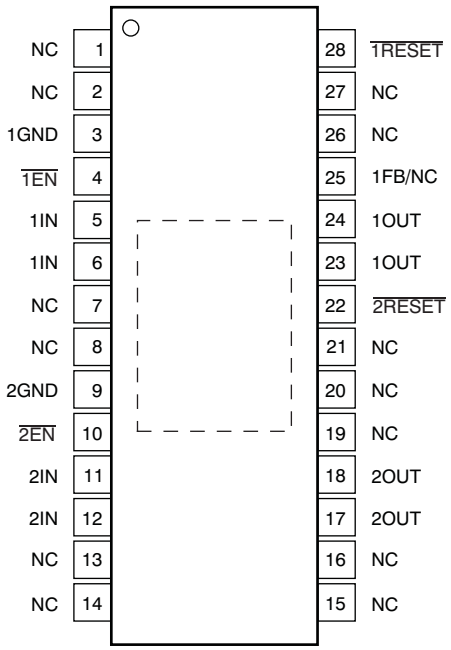

NC = No internal connection

TERMINAL FUNCTIONS

TERMINAL		DESCRIPTION
NAME	NO.	
1GND	3	Regulator #1 ground
$\overline{1EN}$	4	Regulator #1 enable
1IN	5, 6	Regulator #1 input supply voltage
2GND	9	Regulator #2 ground
$\overline{2EN}$	10	Regulator #2 enable
2IN	11, 12	Regulator #2 input supply voltage
2OUT	17, 18	Regulator #2 output voltage
$\overline{2RESET}$	22	Regulator #2 reset signal
1OUT	23, 24	Regulator #1 output voltage
1FB/NC	25	Regulator #1 output voltage feedback for adjustable output; no connection for fixed output
$\overline{1RESET}$	28	Regulator #1 reset signal
NC	1, 2, 7, 8, 13–16, 19, 20, 21, 26, 27	No internal connection

Copyright © 1999–2008, Texas Instruments Incorporated

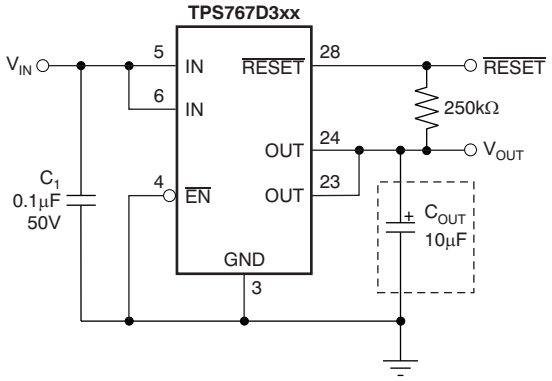

Figure 1. Typical Application Circuit (Fixed Versions) for Single Channel

TIMING DIAGRAM

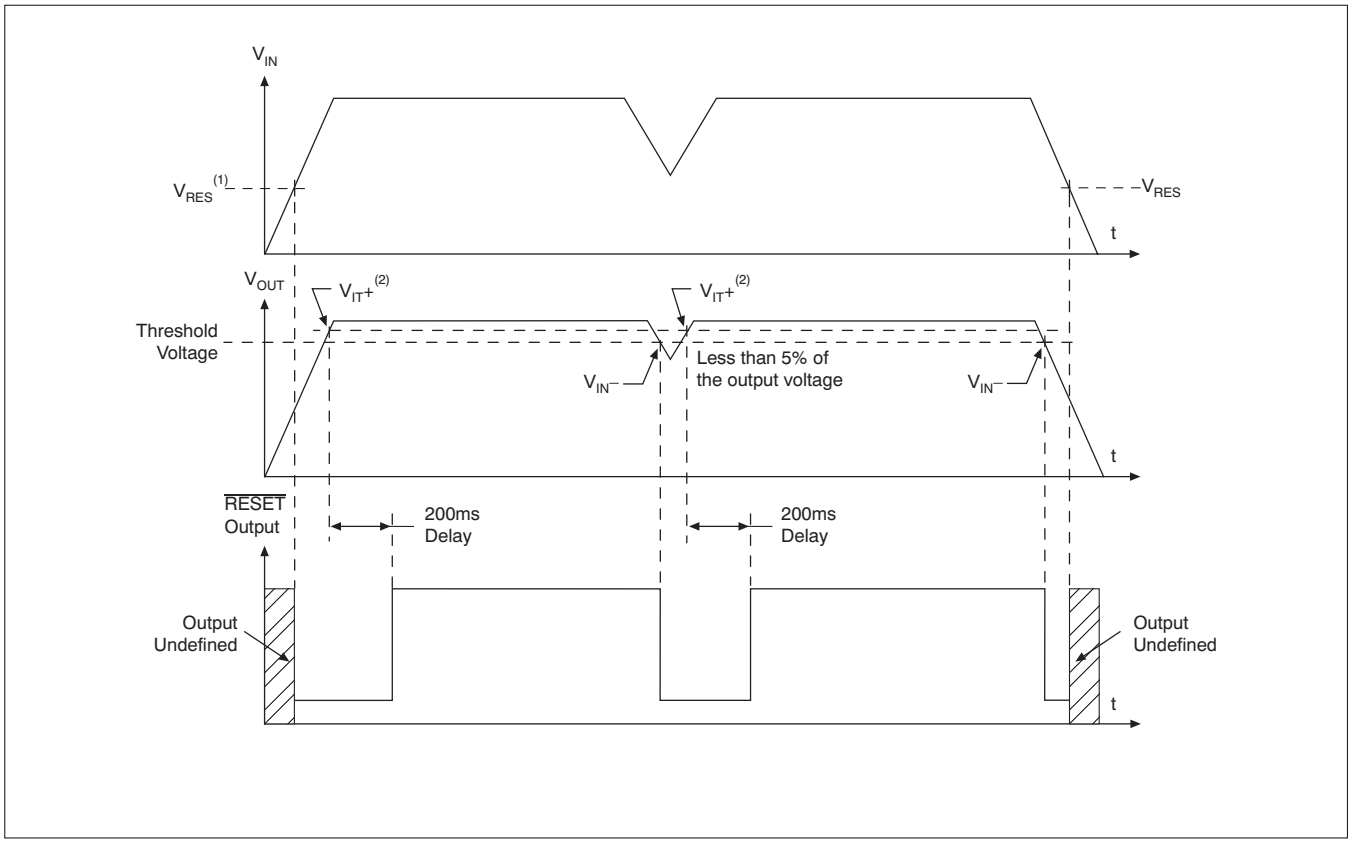

(1) V_{RES} is the minimum input voltage for a valid $\overline{RESET}$.

(2) V_{IT} —Trip voltage is typically 5% lower than the output voltage (95% V_{OUT}).

Copyright © 1999–2008, Texas Instruments Incorporated

TYPICAL CHARACTERISTICS

OUTPUT VOLTAGE vs OUTPUT CURRENT

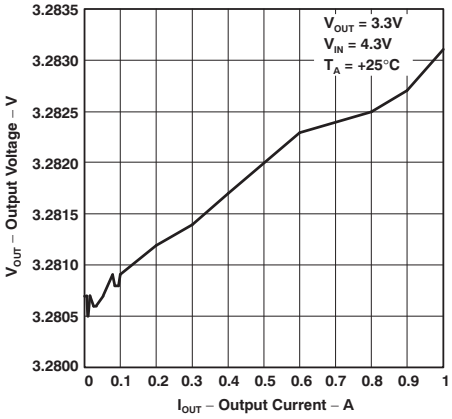

Figure 2.

OUTPUT VOLTAGE vs OUTPUT CURRENT

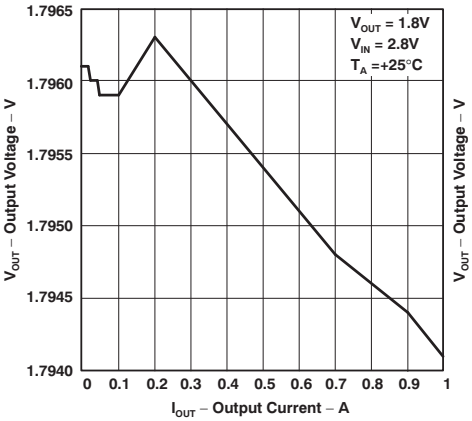

Figure 3.

OUTPUT VOLTAGE vs OUTPUT CURRENT

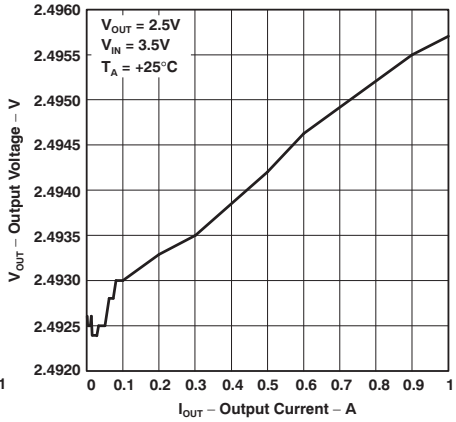

Figure 4.

OUTPUT VOLTAGE vs FREE-AIR TEMPERATURE

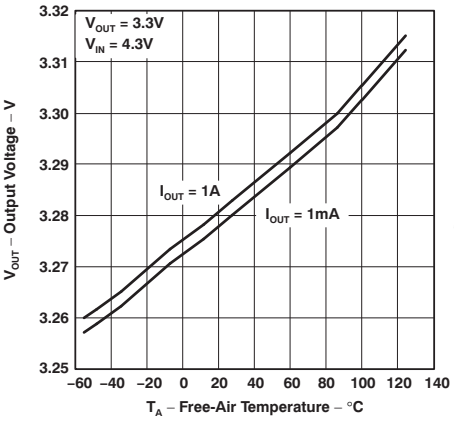

Figure 5.

OUTPUT VOLTAGE vs FREE-AIR TEMPERATURE

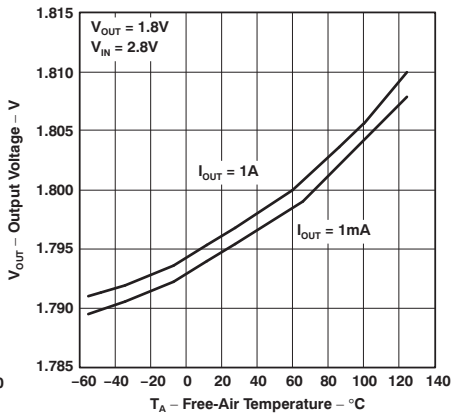

Figure 6.

OUTPUT VOLTAGE vs FREE-AIR TEMPERATURE

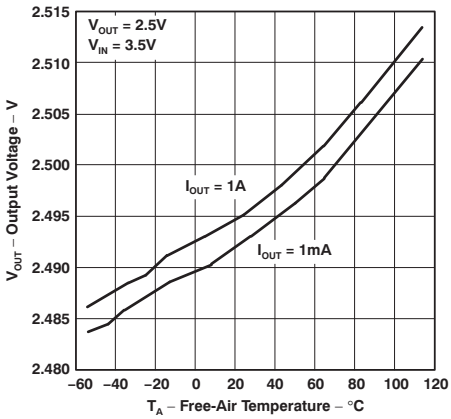

Figure 7.

GROUND CURRENT vs FREE-AIR TEMPERATURE

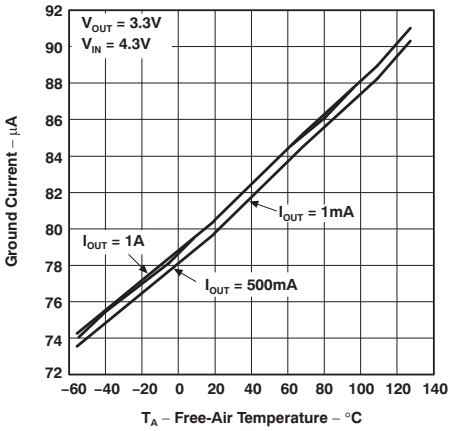

Figure 8.

GROUND CURRENT vs FREE-AIR TEMPERATURE

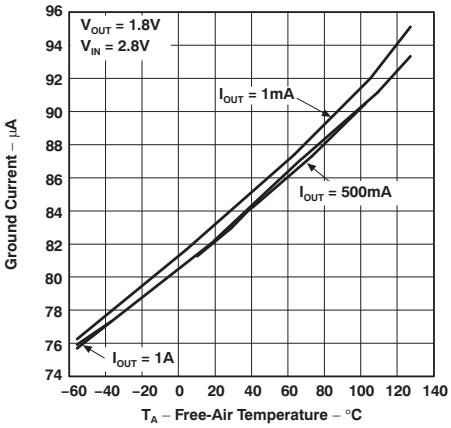

Figure 9.

POWER SUPPLY RIPPLE REJECTION vs FREQUENCY

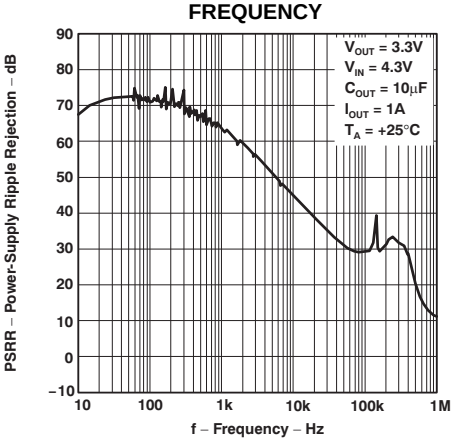

Figure 10.

Copyright © 1999–2008, Texas Instruments Incorporated

TYPICAL CHARACTERISTICS (continued)

OUTPUT SPECTRAL NOISE DENSITY VS FREQUENCY

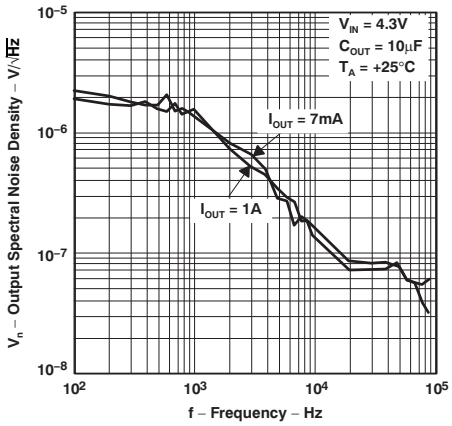

Figure 11.

OUTPUT IMPEDANCE VS FREQUENCY

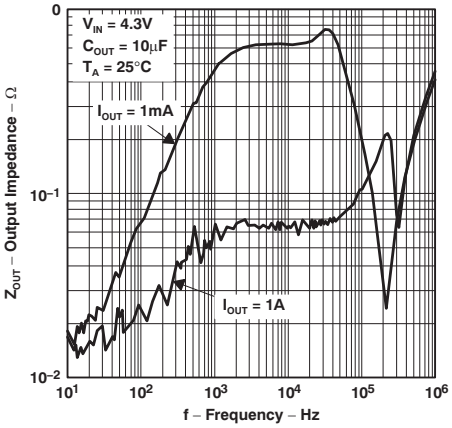

Figure 12.

DROPOUT VOLTAGE VS FREE-AIR TEMPERATURE

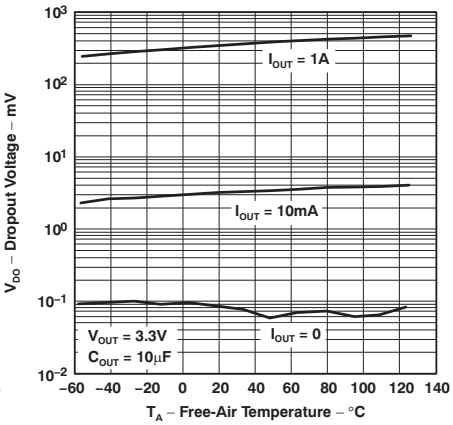

Figure 13.

LINE TRANSIENT RESPONSE

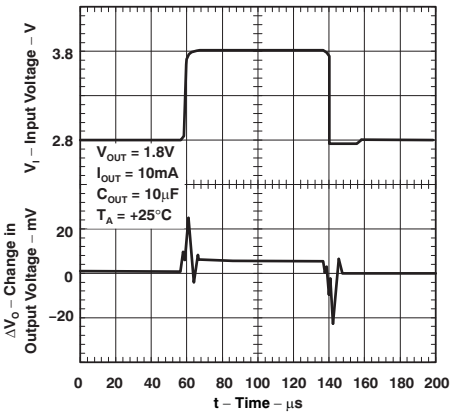

Figure 14.

LOAD TRANSIENT RESPONSE

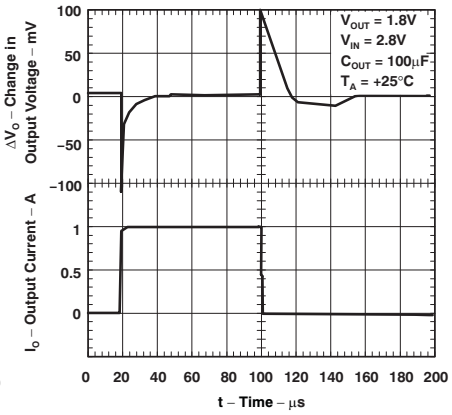

Figure 15.

LINE TRANSIENT RESPONSE

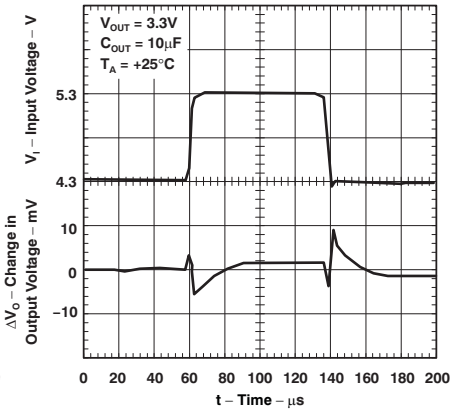

Figure 16.

LOAD TRANSIENT RESPONSE

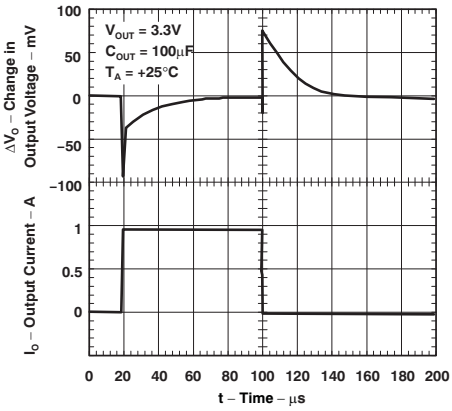

Figure 17.

OUTPUT VOLTAGE VS TIME (AT START-UP)

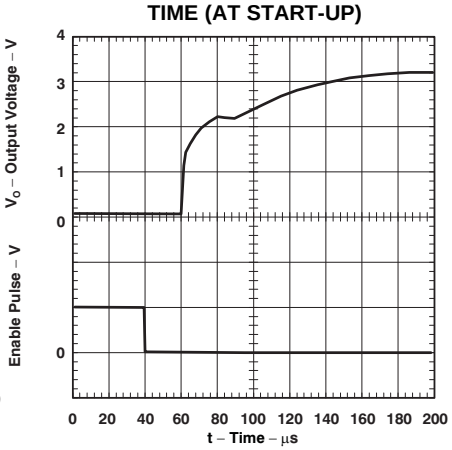

Figure 18.

DROPOUT VOLTAGE VS INPUT VOLTAGE

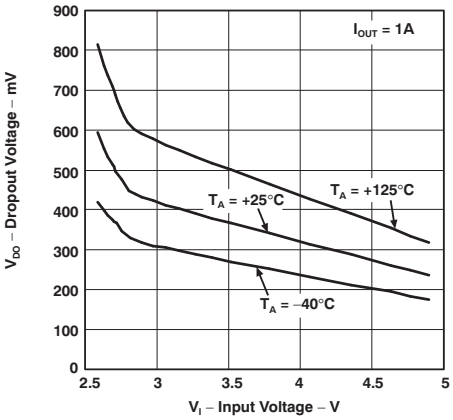

Figure 19.

Copyright © 1999–2008, Texas Instruments Incorporated

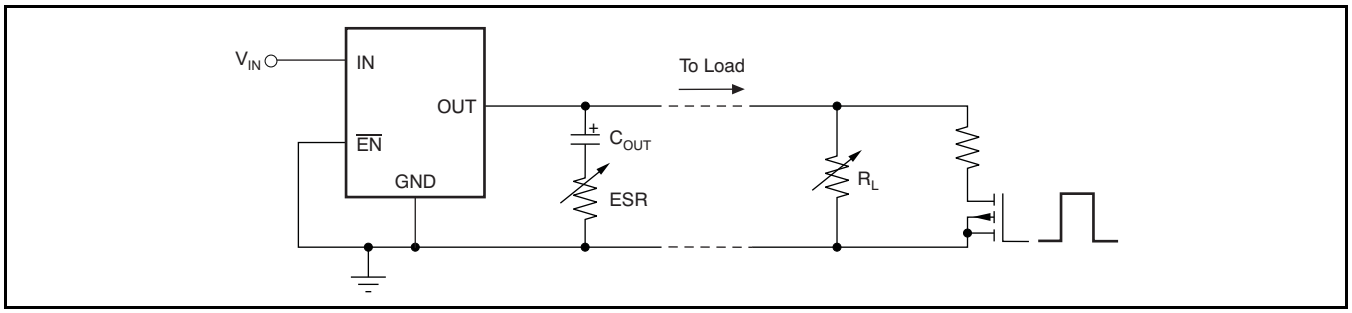

Figure 20. Test Circuit for Typical Regions of Stability (Figure 21 through Figure 24) (Fixed Output Options)

Equivalent series resistance (ESR) refers to the total series resistance, including the ESR of the capacitor, any resistance added externally, and PWB trace resistance to C_{OUT}.

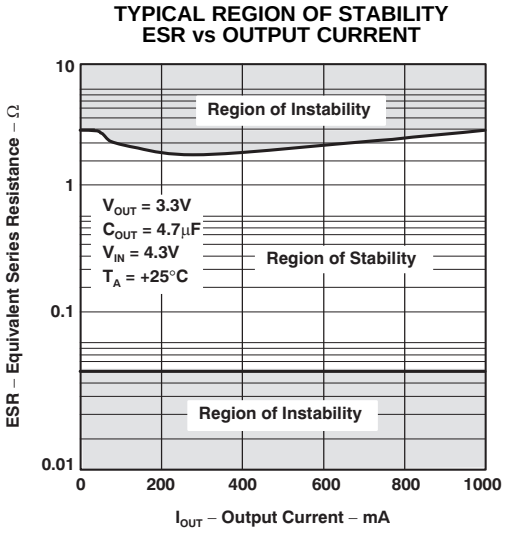

Figure 21.

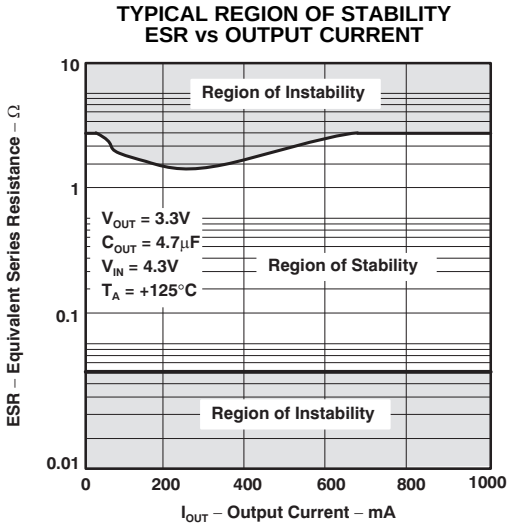

Figure 22.

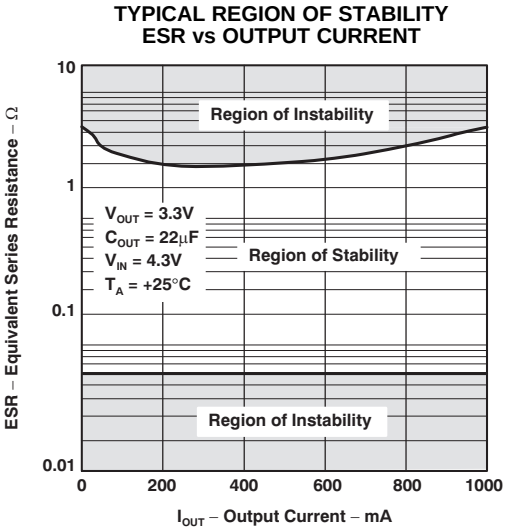

Figure 23.

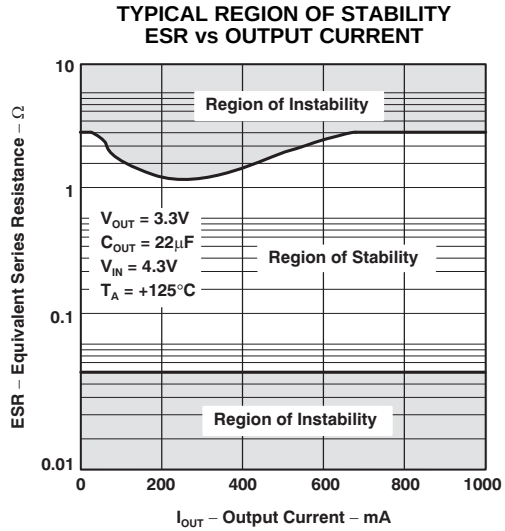

Figure 24.

Copyright © 1999–2008, Texas Instruments Incorporated

APPLICATION INFORMATION

The features of the TPS767D3xx family (low-dropout voltage, ultra low quiescent current, power-saving shutdown mode, and a supply-voltage supervisor) and the power-dissipation properties of the TSSOP PowerPAD package have enabled the integration of the dual LDO regulator with high output current for use in DSP and other multiple voltage applications. Figure 25 shows a typical dual-voltage DSP application.

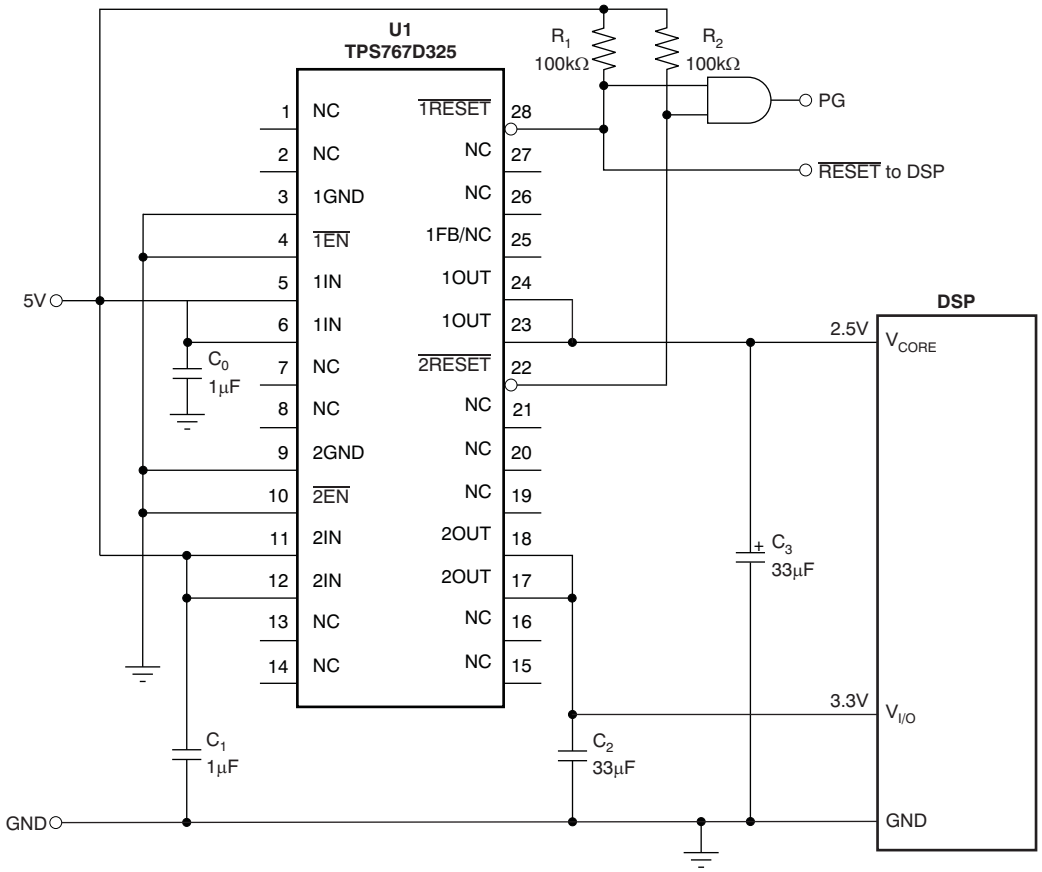

Figure 25. Dual-Voltage DSP Application

DSP power requirements include very high transient currents that must be considered in the initial design. This design uses higher-valued output capacitors to handle the large transient currents.

DEVICE OPERATION

The TPS767D3xx features very low quiescent current, which remain virtually constant even with varying loads. Conventional LDO regulators use a pnp pass element, the base current of which is directly proportional to the load current through the regulator ($I_B = I_C/\beta$). Close examination of the data sheets reveals that these devices are typically specified under near no-load conditions; actual operating currents are much higher as evidenced by typical quiescent current versus load current curves. The TPS767D3xx uses a PMOS transistor to pass current; because the gate of the PMOS is voltage driven, operating current is low and invariable over the full load range. The TPS767D3xx specifications reflect actual performance under load condition.

Another pitfall associated with the pnp pass element is its tendency to saturate when the device goes into dropout. The resulting drop in β forces an increase in I_B to maintain the load. During power-up, this translates to large start-up currents. Systems with limited supply current may fail to start up. In battery-powered systems, it means rapid battery discharge when the voltage decays below the minimum required for regulation. The TPS767D3xx quiescent current remains low even when the regulator drops out, eliminating both problems.

Copyright © 1999–2008, Texas Instruments Incorporated

The TPS767D3xx family also features a shutdown mode that places the output in the high-impedance state (essentially equal to the feedback-divider resistance) and reduces quiescent current to under 2µA. If the shutdown feature is not used, $\overline{EN}$ should be tied to ground. Response to an enable transition is quick; regulated output voltage is typically re-established in 120µs.

MINIMUM LOAD REQUIREMENTS

The TPS767D3xx family is stable even at zero load; no minimum load is required for operation.

FB-PIN CONNECTION (ADJUSTABLE VERSION ONLY)

The FB pin is an input pin to sense the output voltage and close the loop for the adjustable option. The output voltage is sensed through a resistor divider network as is shown in Figure 26 to close the loop. Normally, this connection should be as short as possible; however, the connection can be made near a critical circuit to improve performance at that point. Internally, FB connects to a high-impedance, wide-bandwidth amplifier and noise pickup feeds through to the regulator output. Routing the FB connection to minimize/avoid noise pickup is essential. In fixed output options, this pin is not connected.

EXTERNAL CAPACITOR REQUIREMENTS

An input capacitor is not required; however, a ceramic bypass capacitor (0.047pF to 0.1µF) improves load transient response and noise rejection when the TPS767D3xx is located more than a few inches from the power supply. A higher-capacitance electrolytic capacitor may be necessary if large (hundreds of milliamps) load transients with fast rise times are anticipated.

Like all low dropout regulators, the TPS767D3xx requires an output capacitor connected between OUT and GND to stabilize the internal control loop. The minimum recommended capacitance value is 10µF and the ESR (equivalent series resistance) must be between 60mΩ and 1.5Ω. Capacitor values of 10µF or larger are acceptable, provided the ESR is less than 1.5Ω. Solid tantalum electrolytic, aluminum electrolytic, and multilayer ceramic capacitors are all suitable, provided they meet the requirements described previously.

When necessary to achieve low height requirements along with high output current and/or high ceramic load capacitance, several higher ESR capacitors can be used in parallel to meet the previous guidelines.

PROGRAMMING THE TPS767D301 ADJUSTABLE LDO REGULATOR

The output voltage of the TPS767D301 adjustable regulator is programmed using an external resistor divider as shown in Figure 26. The output voltage is calculated using:

$$V_{OUT} = V_{REF} \times \left(1 + \frac{R_1}{R_2}\right) \tag{1}$$

Resistors R_1 and R_2 should be chosen for approximately 40µA divider current. Lower-value resistors can be used but offer no inherent advantage and waste more power. Higher values should be avoided as leakage currents at FB increase the output voltage error.

Copyright © 1999–2008, Texas Instruments Incorporated

The recommended design procedure is to choose R_2 = 30.1 kΩ to set the divider current at 40µA and then calculate R_1 using:

$$R_1 = \left(\frac{V_{OUT}}{V_{REF}} - 1\right) \times R_2 \tag{2}$$

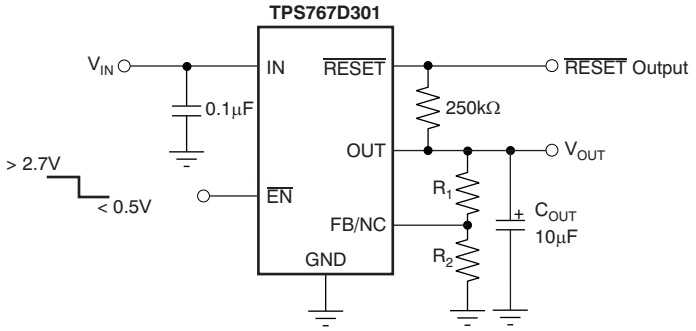

OUTPUT VOLTAGE PROGRAMMING GUIDE

OUTPUT VOLTAGE	R_1	R_2	UNIT
2.5V	33.2	30.1	kΩ
3.3V	53.6	30.1	kΩ
3.6V	61.9	30.1	kΩ
4.75V	90.8	30.1	kΩ

Figure 26. TPS767D301 Adjustable LDO Regulator Programming

RESET INDICATOR

The TPS767D3xx features a $\overline{\text{RESET}}$ output that can be used to monitor the status of the regulator. The internal comparator monitors the output voltage: when the output drops to 95% (typical) of its regulated value, the $\overline{\text{RESET}}$ output transistor turns on, taking the signal low. The open-drain output requires a pullup resistor. If not used, it can be left floating. $\overline{\text{RESET}}$ can be used to drive power-on reset circuitry or as a low-battery indicator.

REGULATOR PROTECTION

The TPS767D3xx PMOS-pass transistor has a built-in back-gate diode that safely conducts reverse currents when the input voltage drops below the output voltage (for example, during power-down). Current is conducted from the output to the input and is not internally limited. When extended reverse voltage is anticipated, external limiting may be appropriate.

The TPS767D3xx also features internal current limiting and thermal protection. During normal operation, the TPS767D3xx limits output current to approximately 1.7A. When current limiting engages, the output voltage scales back linearly until the overcurrent condition ends. While current limiting is designed to prevent gross device failure, care should be taken not to exceed the power dissipation ratings of the package. If the temperature of the device exceeds +150°C (typ), thermal-protection circuitry shuts it down. Once the device has cooled below +130°C (typ), regulator operation resumes.

Copyright © 1999–2008, Texas Instruments Incorporated

POWER DISSIPATION AND JUNCTION TEMPERATURE

Specified regulator operation is assured to a junction temperature of +125°C; the maximum junction temperature should be restricted to +125°C under normal operating conditions. This restriction limits the power dissipation the regulator can handle in any given application. To ensure the junction temperature is within acceptable limits, calculate the maximum allowable dissipation, $P_D$max, and the actual dissipation, P_D, which must be less than or equal to $P_D$max.

The maximum-power-dissipation limit is determined using the following equation:

$$P_D\,max = \frac{T_J\,max - T_A}{R_{\Theta JA}} \tag{3}$$

Where:

- $T_J$max is the maximum allowable junction temperature.
- $R_{\theta JA}$ is the thermal resistance junction-to-ambient for the package, that is, 28°C/W for the 28-terminal PWP with no airflow.
- T_A is the ambient temperature.

The regulator dissipation is calculated using:

$$P_D = \left(V_{IN} - V_{OUT}\right) \times I_{OUT} \tag{4}$$

Power dissipation resulting from quiescent current is negligible. Excessive power dissipation will trigger the thermal protection circuit.

Copyright © 1999–2008, Texas Instruments Incorporated

Revision History

Changes from Revision F (February 2008) to Revision G	Page
• Changed Corrected symbol for FB current in *Electrical Characteristics*	3

Copyright © 1999–2008, Texas Instruments Incorporated

PACKAGING INFORMATION

Orderable Device	Status (1)	Package Type	Package Drawing	Pins	Package Qty	Eco Plan (2)	Lead/Ball Finish	MSL Peak Temp (3)	Op Temp (°C)	Top-Side Markings (4)	Samples
TPS767D301PWP	ACTIVE	HTSSOP	PWP	28	50	Green (RoHS & no Sb/Br)	CU NIPDAU	Level-2-260C-1 YEAR		PS767D301	Samples
TPS767D301PWPG4	ACTIVE	HTSSOP	PWP	28	50	Green (RoHS & no Sb/Br)	CU NIPDAU	Level-2-260C-1 YEAR		PS767D301	Samples
TPS767D301PWPR	ACTIVE	HTSSOP	PWP	28	2000	Green (RoHS & no Sb/Br)	CU NIPDAU	Level-2-260C-1 YEAR		PS767D301	Samples
TPS767D301PWPRG4	ACTIVE	HTSSOP	PWP	28	2000	Green (RoHS & no Sb/Br)	CU NIPDAU	Level-2-260C-1 YEAR		PS767D301	Samples
TPS767D318PWP	ACTIVE	HTSSOP	PWP	28	50	Green (RoHS & no Sb/Br)	CU NIPDAU	Level-2-260C-1 YEAR	-40 to 125	PS767D318	Samples
TPS767D318PWPG4	ACTIVE	HTSSOP	PWP	28	50	Green (RoHS & no Sb/Br)	CU NIPDAU	Level-2-260C-1 YEAR	-40 to 125	PS767D318	Samples
TPS767D318PWPR	ACTIVE	HTSSOP	PWP	28	2000	Green (RoHS & no Sb/Br)	CU NIPDAU	Level-2-260C-1 YEAR	-40 to 125	PS767D318	Samples
TPS767D318PWPRG4	ACTIVE	HTSSOP	PWP	28	2000	Green (RoHS & no Sb/Br)	CU NIPDAU	Level-2-260C-1 YEAR	-40 to 125	PS767D318	Samples
TPS767D325PWP	ACTIVE	HTSSOP	PWP	28	50	Green (RoHS & no Sb/Br)	CU NIPDAU	Level-2-260C-1 YEAR		PS767D325	Samples
TPS767D325PWPG4	ACTIVE	HTSSOP	PWP	28	50	Green (RoHS & no Sb/Br)	CU NIPDAU	Level-2-260C-1 YEAR		PS767D325	Samples
TPS767D325PWPR	ACTIVE	HTSSOP	PWP	28	2000	Green (RoHS & no Sb/Br)	CU NIPDAU	Level-2-260C-1 YEAR		PS767D325	Samples
TPS767D325PWPRG4	ACTIVE	HTSSOP	PWP	28	2000	Green (RoHS & no Sb/Br)	CU NIPDAU	Level-2-260C-1 YEAR		PS767D325	Samples

(1) The marketing status values are defined as follows:
ACTIVE: Product device recommended for new designs.
LIFEBUY: TI has announced that the device will be discontinued, and a lifetime-buy period is in effect.
NRND: Not recommended for new designs. Device is in production to support existing customers, but TI does not recommend using this part in a new design.
PREVIEW: Device has been announced but is not in production. Samples may or may not be available.
OBSOLETE: TI has discontinued the production of the device.

(2) Eco Plan - The planned eco-friendly classification: Pb-Free (RoHS), Pb-Free (RoHS Exempt), or Green (RoHS & no Sb/Br) - please check http://www.ti.com/productcontent for the latest availability information and additional product content details.
TBD: The Pb-Free/Green conversion plan has not been defined.

Pb-Free (RoHS): TI's terms "Lead-Free" or "Pb-Free" mean semiconductor products that are compatible with the current RoHS requirements for all 6 substances, including the requirement that lead not exceed 0.1% by weight in homogeneous materials. Where designed to be soldered at high temperatures, TI Pb-Free products are suitable for use in specified lead-free processes.
Pb-Free (RoHS Exempt): This component has a RoHS exemption for either 1) lead-based flip-chip solder bumps used between the die and package, or 2) lead-based die adhesive used between the die and leadframe. The component is otherwise considered Pb-Free (RoHS compatible) as defined above.
Green (RoHS & no Sb/Br): TI defines "Green" to mean Pb-Free (RoHS compatible), and free of Bromine (Br) and Antimony (Sb) based flame retardants (Br or Sb do not exceed 0.1% by weight in homogeneous material)

(3) MSL, Peak Temp. -- The Moisture Sensitivity Level rating according to the JEDEC industry standard classifications, and peak solder temperature.

(4) Multiple Top-Side Markings will be inside parentheses. Only one Top-Side Marking contained in parentheses and separated by a "~" will appear on a device. If a line is indented then it is a continuation of the previous line and the two combined represent the entire Top-Side Marking for that device.

Important Information and Disclaimer: The information provided on this page represents TI's knowledge and belief as of the date that it is provided. TI bases its knowledge and belief on information provided by third parties, and makes no representation or warranty as to the accuracy of such information. Efforts are underway to better integrate information from third parties. TI has taken and continues to take reasonable steps to provide representative and accurate information but may not have conducted destructive testing or chemical analysis on incoming materials and chemicals. TI and TI suppliers consider certain information to be proprietary, and thus CAS numbers and other limited information may not be available for release.

In no event shall TI's liability arising out of such information exceed the total purchase price of the TI part(s) at issue in this document sold by TI to Customer on an annual basis.

OTHER QUALIFIED VERSIONS OF TPS767D301, TPS767D318, TPS767D325 :

- Automotive: TPS767D301-Q1, TPS767D318-Q1, TPS767D325-Q1
- Enhanced Product: TPS767D301-EP

NOTE: Qualified Version Definitions:

- Automotive - Q100 devices qualified for high-reliability automotive applications targeting zero defects
- Enhanced Product - Supports Defense, Aerospace and Medical Applications

TAPE AND REEL INFORMATION

REEL DIMENSIONS

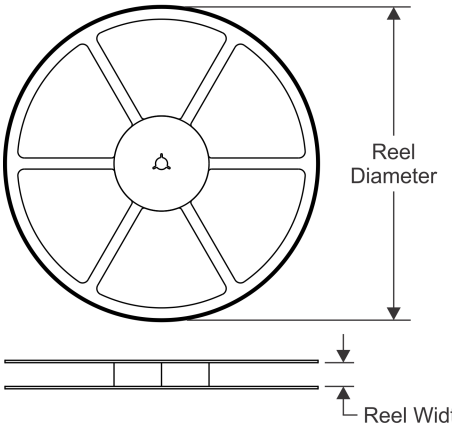

TAPE DIMENSIONS

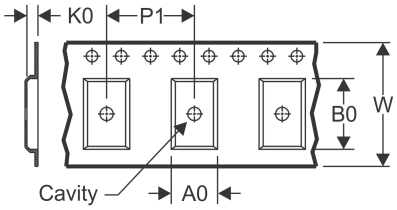

A0	Dimension designed to accommodate the component width
B0	Dimension designed to accommodate the component length
K0	Dimension designed to accommodate the component thickness
W	Overall width of the carrier tape
P1	Pitch between successive cavity centers

QUADRANT ASSIGNMENTS FOR PIN 1 ORIENTATION IN TAPE

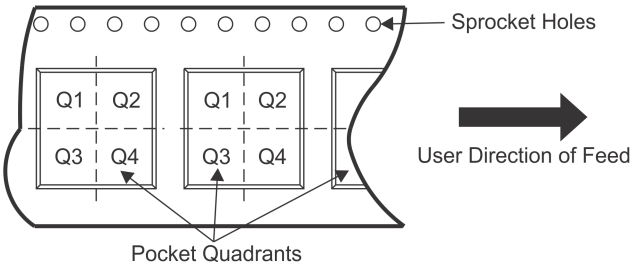

*All dimensions are nominal

Device	Package Type	Package Drawing	Pins	SPQ	Reel Diameter (mm)	Reel Width W1 (mm)	A0 (mm)	B0 (mm)	K0 (mm)	P1 (mm)	W (mm)	Pin1 Quadrant
TPS767D318PWPR	HTSSOP	PWP	28	2000	330.0	16.4	6.9	10.2	1.8	12.0	16.0	Q1
TPS767D325PWPR	HTSSOP	PWP	28	2000	330.0	16.4	6.9	10.2	1.8	12.0	16.0	Q1

TAPE AND REEL BOX DIMENSIONS

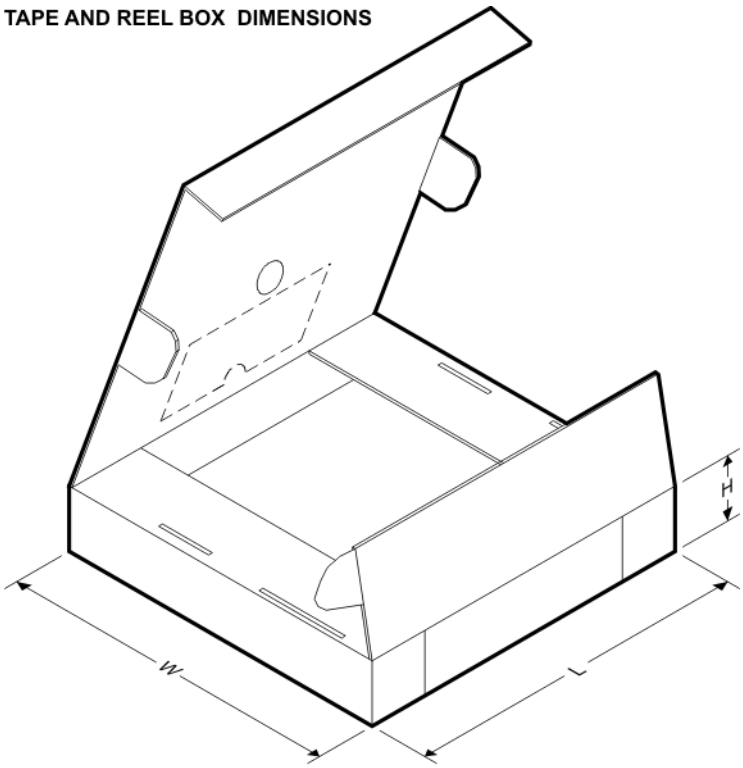

*All dimensions are nominal

Device	Package Type	Package Drawing	Pins	SPQ	Length (mm)	Width (mm)	Height (mm)
TPS767D318PWPR	HTSSOP	PWP	28	2000	367.0	367.0	38.0
TPS767D325PWPR	HTSSOP	PWP	28	2000	367.0	367.0	38.0

PWP (R-PDSO-G28) PowerPAD™ PLASTIC SMALL OUTLINE

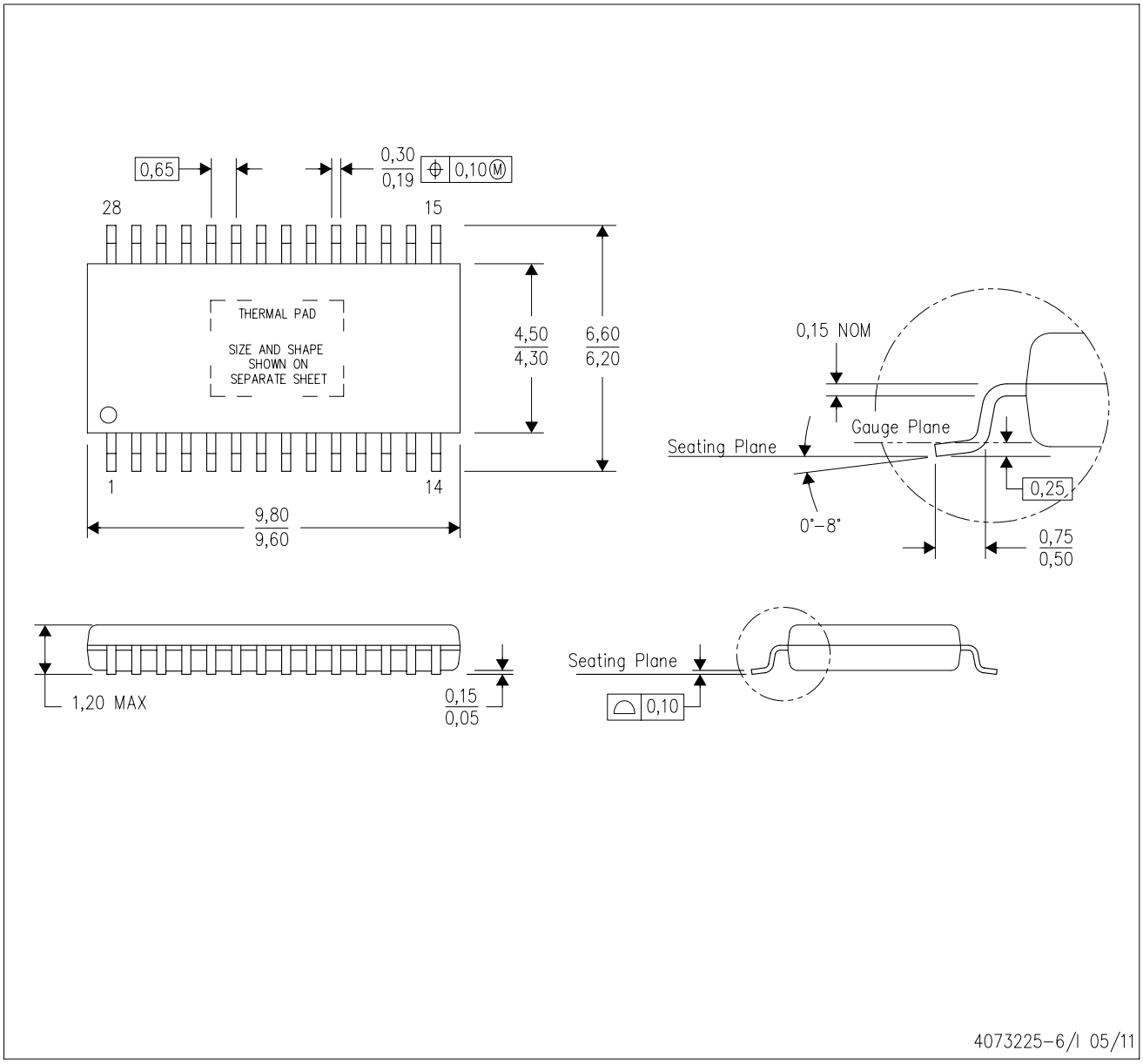

NOTES:
A. All linear dimensions are in millimeters.
B. This drawing is subject to change without notice.
C. Body dimensions do not include mold flash or protrusions. Mold flash and protrusion shall not exceed 0.15 per side.
D. This package is designed to be soldered to a thermal pad on the board. Refer to Technical Brief, PowerPad Thermally Enhanced Package, Texas Instruments Literature No. SLMA002 for information regarding recommended board layout. This document is available at www.ti.com <http://www.ti.com>.
E. See the additional figure in the Product Data Sheet for details regarding the exposed thermal pad features and dimensions.
E. Falls within JEDEC MO-153

PowerPAD is a trademark of Texas Instruments.

PWP (R-PDSO-G28) PowerPAD™ SMALL PLASTIC OUTLINE

THERMAL INFORMATION

This PowerPAD™ package incorporates an exposed thermal pad that is designed to be attached to a printed circuit board (PCB). The thermal pad must be soldered directly to the PCB. After soldering, the PCB can be used as a heatsink. In addition, through the use of thermal vias, the thermal pad can be attached directly to the appropriate copper plane shown in the electrical schematic for the device, or alternatively, can be attached to a special heatsink structure designed into the PCB. This design optimizes the heat transfer from the integrated circuit (IC).

For additional information on the PowerPAD package and how to take advantage of its heat dissipating abilities, refer to Technical Brief, PowerPAD Thermally Enhanced Package, Texas Instruments Literature No. SLMA002 and Application Brief, PowerPAD Made Easy, Texas Instruments Literature No. SLMA004. Both documents are available at www.ti.com.

The exposed thermal pad dimensions for this package are shown in the following illustration.

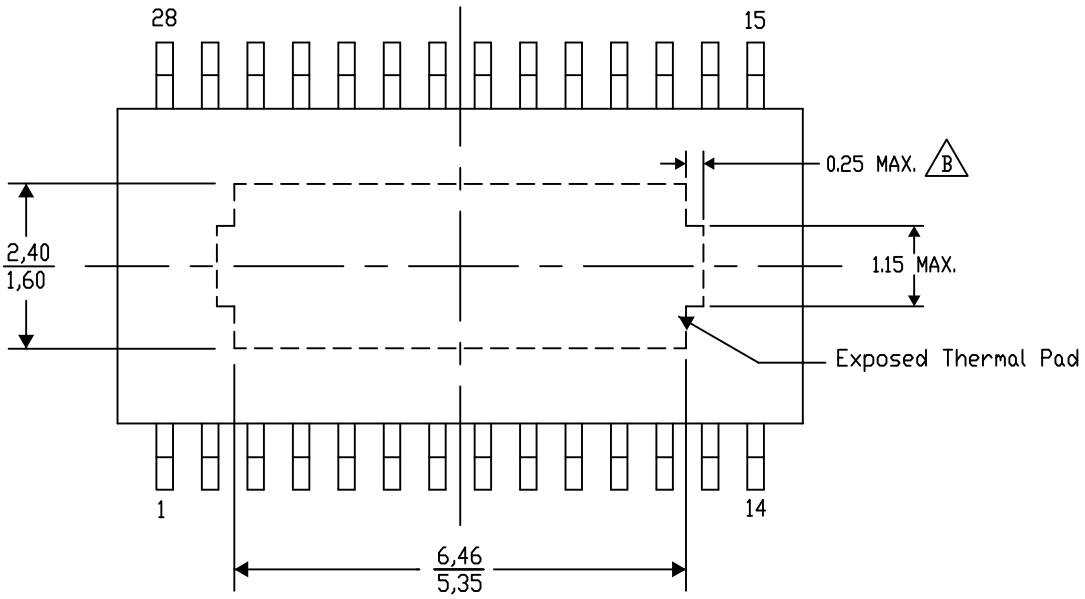

Top View

Exposed Thermal Pad Dimensions

4206332-34/AE 04/13

NOTE: A. All linear dimensions are in millimeters

B. Exposed tie strap features may not be present.

PowerPAD is a trademark of Texas Instruments

PWP (R–PDSO–G28) PowerPAD™ PLASTIC SMALL OUTLINE

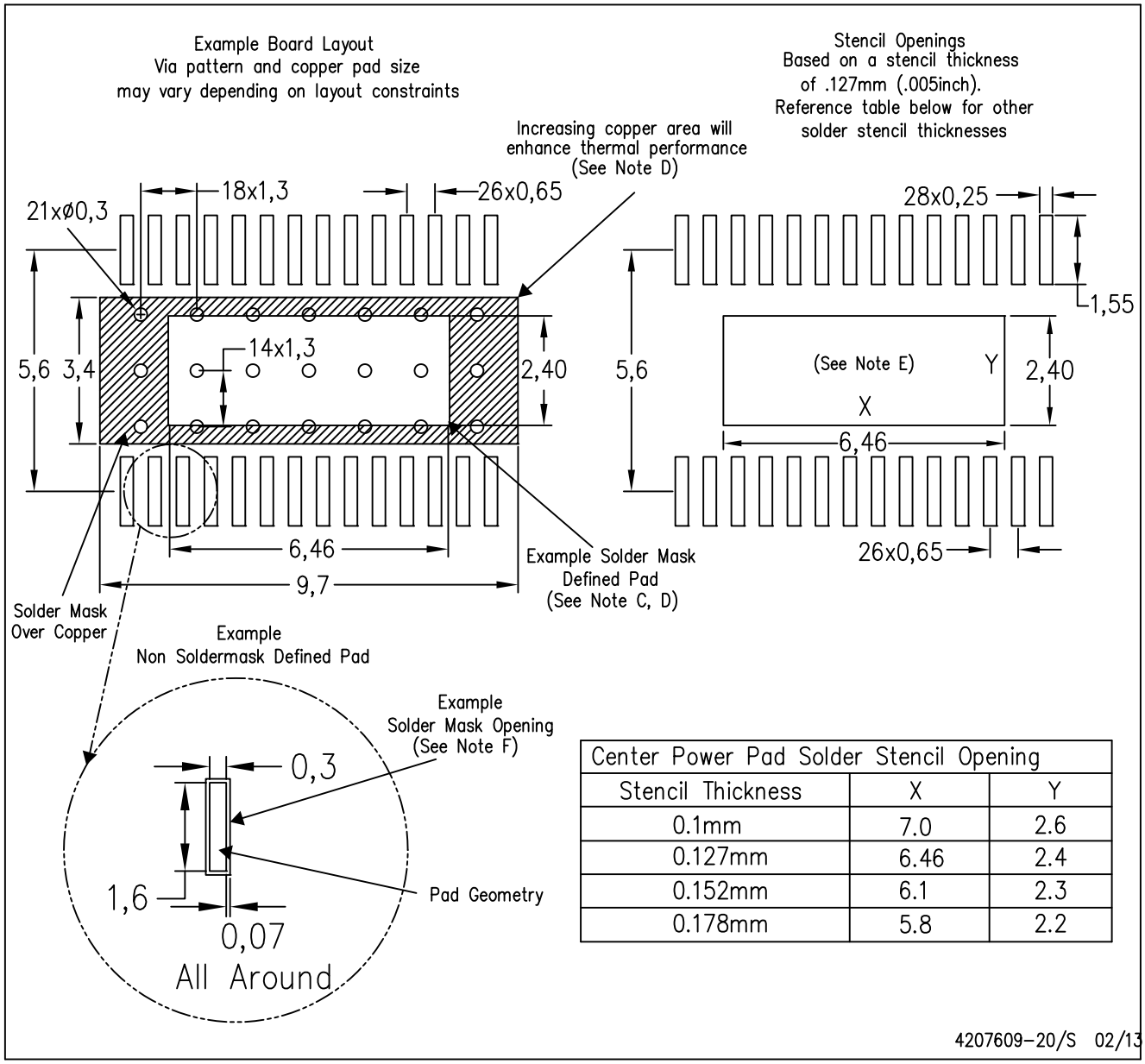

Center Power Pad Solder Stencil Opening		
Stencil Thickness	X	Y
0.1mm	7.0	2.6
0.127mm	6.46	2.4
0.152mm	6.1	2.3
0.178mm	5.8	2.2

NOTES:
A. All linear dimensions are in millimeters.
B. This drawing is subject to change without notice.
C. Customers should place a note on the circuit board fabrication drawing not to alter the center solder mask defined pad.
D. This package is designed to be soldered to a thermal pad on the board. Refer to Technical Brief, PowerPad Thermally Enhanced Package, Texas Instruments Literature No. SLMA002, SLMA004, and also the Product Data Sheets for specific thermal information, via requirements, and recommended board layout. These documents are available at www.ti.com <http://www.ti.com>. Publication IPC–7351 is recommended for alternate designs.
E. Laser cutting apertures with trapezoidal walls and also rounding corners will offer better paste release. Customers should contact their board assembly site for stencil design recommendations. Example stencil design based on a 50% volumetric metal load solder paste. Refer to IPC–7525 for other stencil recommendations.
F. Customers should contact their board fabrication site for solder mask tolerances between and around signal pads.

IMPORTANT NOTICE

Texas Instruments Incorporated and its subsidiaries (TI) reserve the right to make corrections, enhancements, improvements and other changes to its semiconductor products and services per JESD46, latest issue, and to discontinue any product or service per JESD48, latest issue. Buyers should obtain the latest relevant information before placing orders and should verify that such information is current and complete. All semiconductor products (also referred to herein as “components”) are sold subject to TI’s terms and conditions of sale supplied at the time of order acknowledgment.

TI warrants performance of its components to the specifications applicable at the time of sale, in accordance with the warranty in TI’s terms and conditions of sale of semiconductor products. Testing and other quality control techniques are used to the extent TI deems necessary to support this warranty. Except where mandated by applicable law, testing of all parameters of each component is not necessarily performed.

TI assumes no liability for applications assistance or the design of Buyers’ products. Buyers are responsible for their products and applications using TI components. To minimize the risks associated with Buyers’ products and applications, Buyers should provide adequate design and operating safeguards.

TI does not warrant or represent that any license, either express or implied, is granted under any patent right, copyright, mask work right, or other intellectual property right relating to any combination, machine, or process in which TI components or services are used. Information published by TI regarding third-party products or services does not constitute a license to use such products or services or a warranty or endorsement thereof. Use of such information may require a license from a third party under the patents or other intellectual property of the third party, or a license from TI under the patents or other intellectual property of TI.

Reproduction of significant portions of TI information in TI data books or data sheets is permissible only if reproduction is without alteration and is accompanied by all associated warranties, conditions, limitations, and notices. TI is not responsible or liable for such altered documentation. Information of third parties may be subject to additional restrictions.

Resale of TI components or services with statements different from or beyond the parameters stated by TI for that component or service voids all express and any implied warranties for the associated TI component or service and is an unfair and deceptive business practice. TI is not responsible or liable for any such statements.

Buyer acknowledges and agrees that it is solely responsible for compliance with all legal, regulatory and safety-related requirements concerning its products, and any use of TI components in its applications, notwithstanding any applications-related information or support that may be provided by TI. Buyer represents and agrees that it has all the necessary expertise to create and implement safeguards which anticipate dangerous consequences of failures, monitor failures and their consequences, lessen the likelihood of failures that might cause harm and take appropriate remedial actions. Buyer will fully indemnify TI and its representatives against any damages arising out of the use of any TI components in safety-critical applications.

In some cases, TI components may be promoted specifically to facilitate safety-related applications. With such components, TI’s goal is to help enable customers to design and create their own end-product solutions that meet applicable functional safety standards and requirements. Nonetheless, such components are subject to these terms.

No TI components are authorized for use in FDA Class III (or similar life-critical medical equipment) unless authorized officers of the parties have executed a special agreement specifically governing such use.

Only those TI components which TI has specifically designated as military grade or “enhanced plastic” are designed and intended for use in military/aerospace applications or environments. Buyer acknowledges and agrees that any military or aerospace use of TI components which have ***not*** been so designated is solely at the Buyer's risk, and that Buyer is solely responsible for compliance with all legal and regulatory requirements in connection with such use.

TI has specifically designated certain components as meeting ISO/TS16949 requirements, mainly for automotive use. In any case of use of non-designated products, TI will not be responsible for any failure to meet ISO/TS16949.

Products		**Applications**	
Audio	www.ti.com/audio	Automotive and Transportation	www.ti.com/automotive
Amplifiers	amplifier.ti.com	Communications and Telecom	www.ti.com/communications
Data Converters	dataconverter.ti.com	Computers and Peripherals	www.ti.com/computers
DLP® Products	www.dlp.com	Consumer Electronics	www.ti.com/consumer-apps
DSP	dsp.ti.com	Energy and Lighting	www.ti.com/energy
Clocks and Timers	www.ti.com/clocks	Industrial	www.ti.com/industrial
Interface	interface.ti.com	Medical	www.ti.com/medical
Logic	logic.ti.com	Security	www.ti.com/security
Power Mgmt	power.ti.com	Space, Avionics and Defense	www.ti.com/space-avionics-defense
Microcontrollers	microcontroller.ti.com	Video and Imaging	www.ti.com/video
RFID	www.ti-rfid.com		
OMAP Applications Processors	www.ti.com/omap	**TI E2E Community**	e2e.ti.com
Wireless Connectivity	www.ti.com/wirelessconnectivity		

Mailing Address: Texas Instruments, Post Office Box 655303, Dallas, Texas 75265
Copyright © 2013, Texas Instruments Incorporated