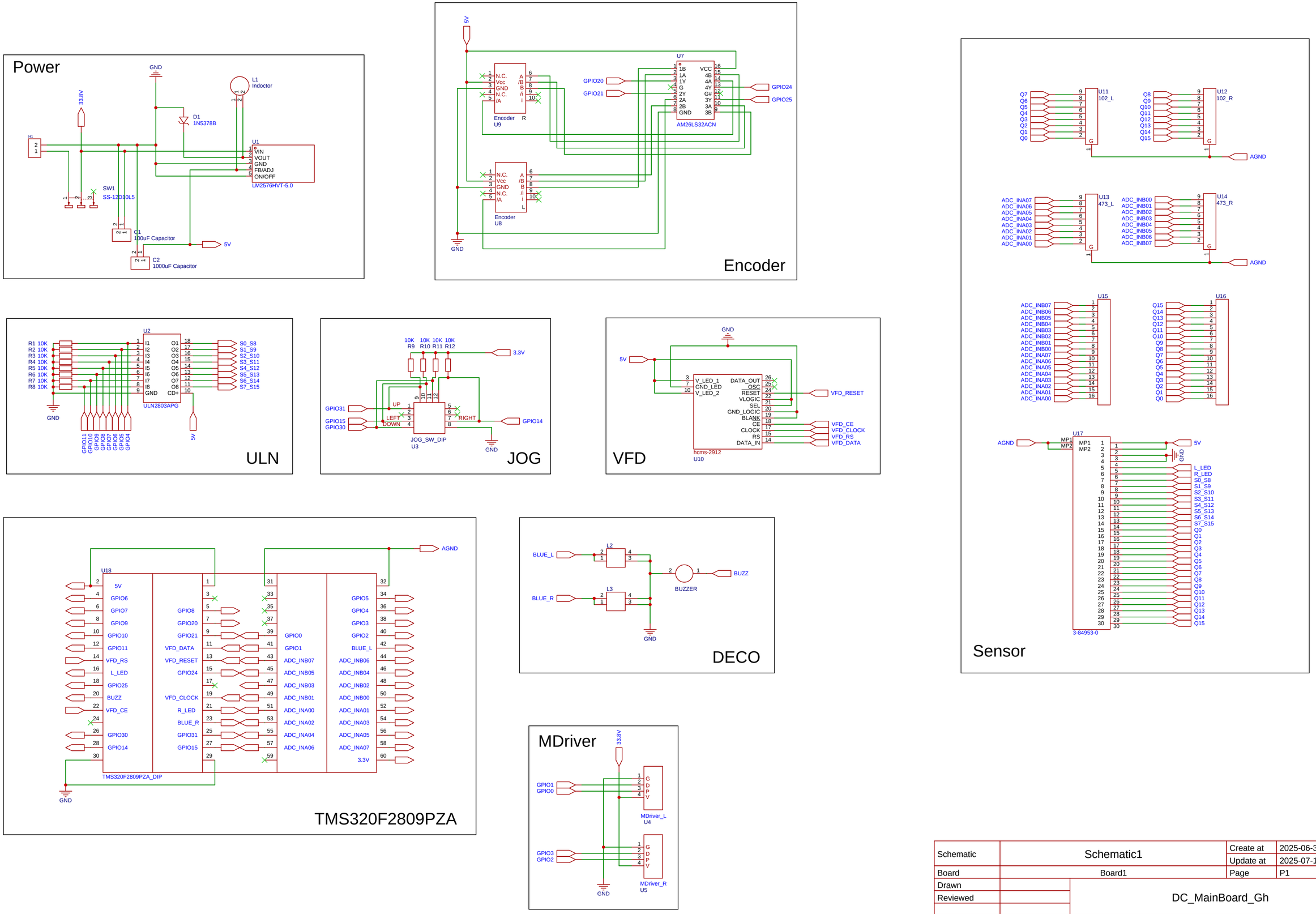

Schematic	Schematic1	Create at	2025-06-30
		Update at	2025-07-13
Board	Board1	Page	P1
Drawn	DC_MainBoard_Gh		
Reviewed			
	Version	Size	Page 1 Total 1
EasyEDA	V1.0	A4	EasyEDA.com