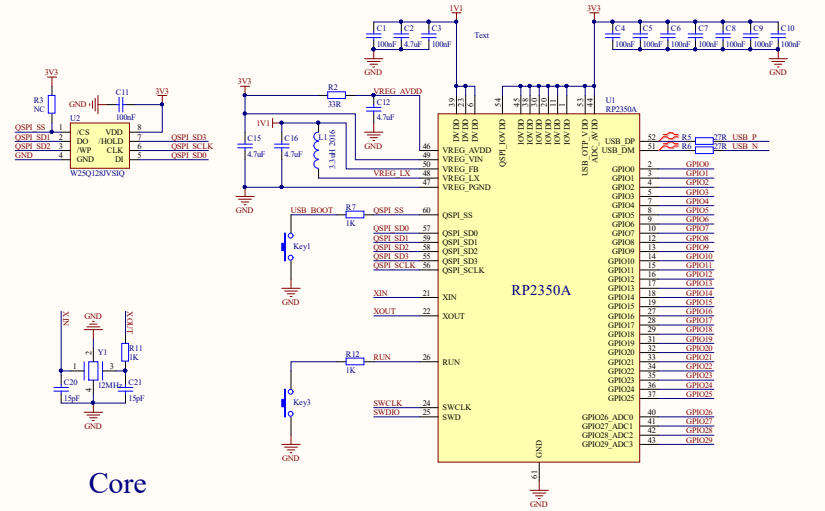

Core

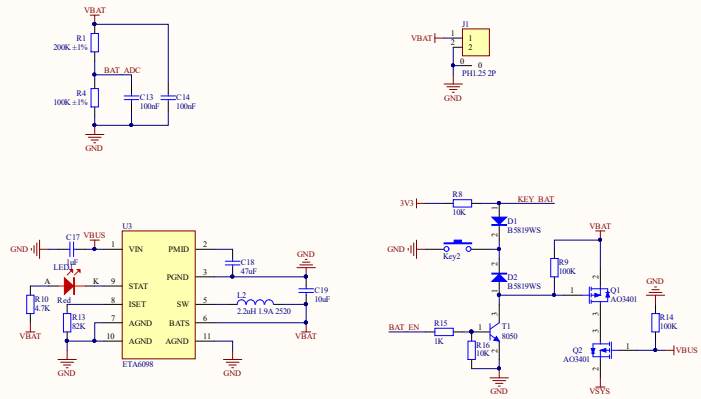

Battery

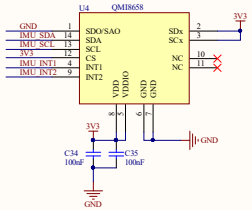

IMU

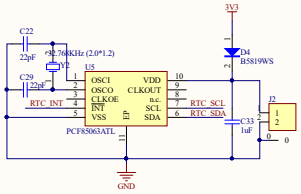

RTC

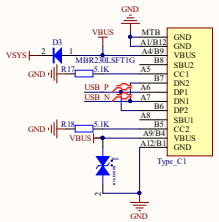

Type-C

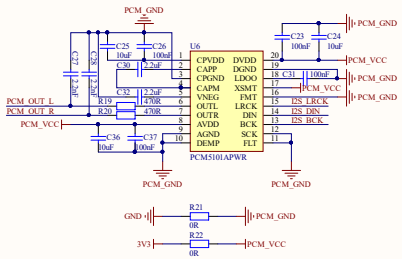

Codec

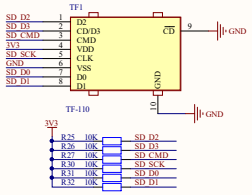

SD Card

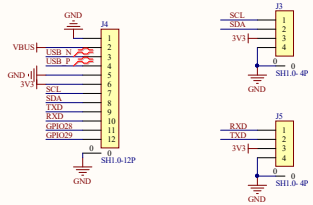

Interface

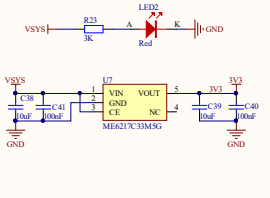

Power

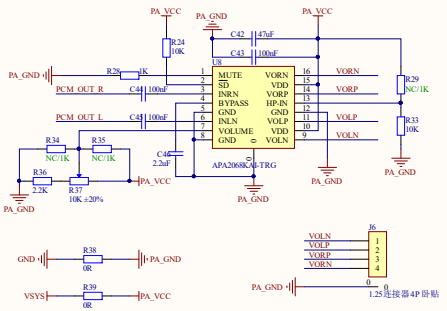

Power Amplifier

RP2350A	LCD	SD Card	IMU	RTC	Codec	Other
GPIO0						TXD
GPIO1						RXD
GPIO2					I2S_BCK	
GPIO3					I2S_LRCK	
GPIO4					I2S_DIN	
GPIO5				RTC_INT		
GPIO6	TP_SDA		IMU_SDA	RTC_SDA		SDA
GPIO7	TP_SCL		IMU_SCL	RTC_SCL		SCL
GPIO8			IMU_INT1			
GPIO9			IMU_INT2			
GPIO10	LCD_SCK					
GPIO11	LCD_MOSI					
GPIO12	LCD_MISO					
GPIO13	LCD_CS					
GPIO14	LCD_D/C					
GPIO15	LCD_RST					
GPIO16	LCD_BL					
GPIO17	TP_RST					
GPIO18	TP_INT					
GPIO19		SD_SCK				
GPIO20		SD_CMD				
GPIO21		SD_D0				
GPIO22		SD_D1				
GPIO23		SD_D2				
GPIO24		SD_D3				
GPIO25						KEY_BAT
GPIO26						BAT_EN
GPIO27						BAT_ADC
GPIO28						GPIO28
GPIO29						GPIO29

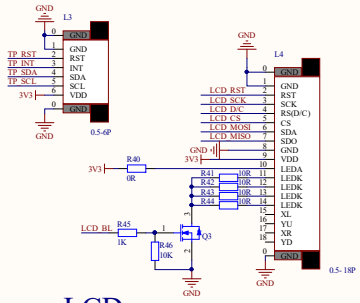

LCD

W waveshare

RP2350-Touch-LCD-2.8