Row-oriented layout

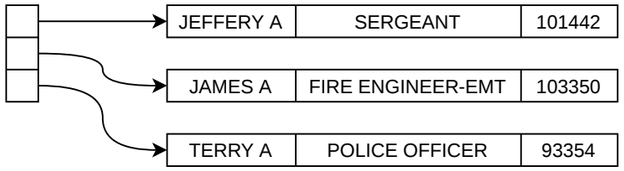

name	position	salary
JEFFERY A	SERGEANT	101442
JAMES A	FIRE ENGINEER-EMT	103350
TERRY A	POLICE OFFICER	93354

Column-oriented layout

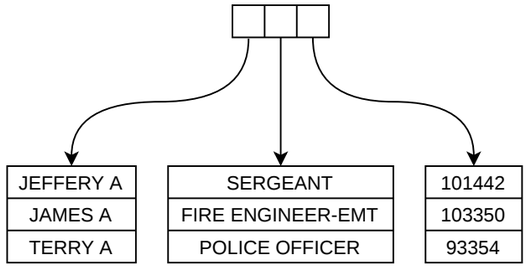

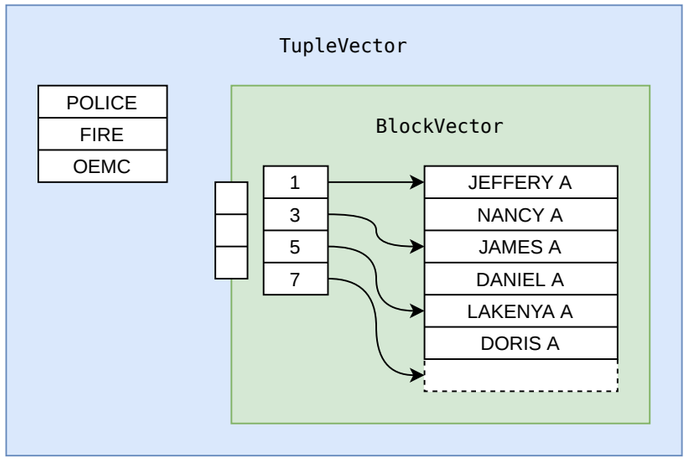
TupleVector
POLICE
FIRE
OEMC
BlockVector
1
3
5
7
JEFFERY A
NANCY A
JAMES A
DANIEL A
LAKENYA A
DORIS A