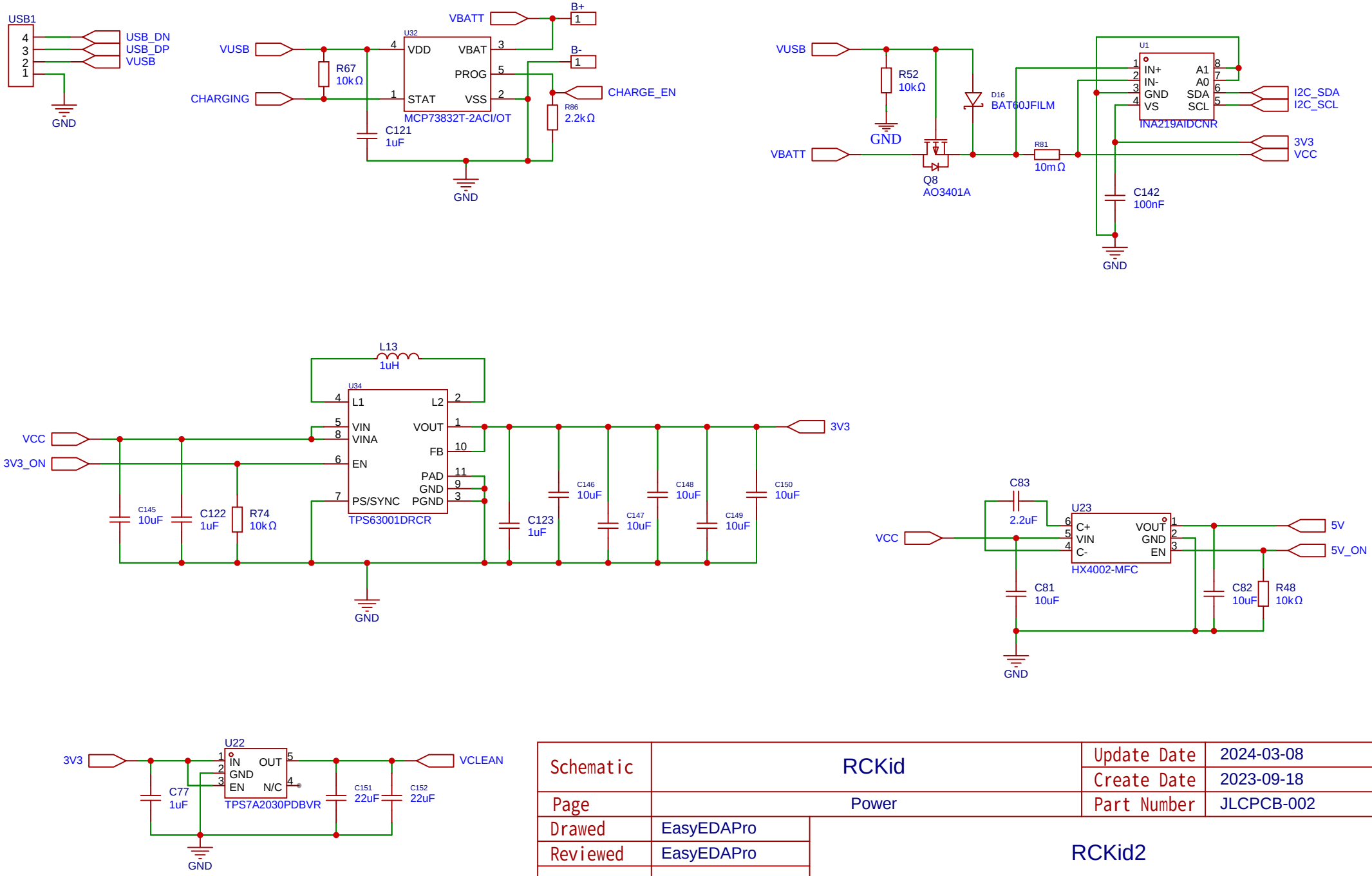

Schematic	RCKid	Update Date	2024-03-08
		Create Date	2023-09-18
Page	Power	Part Number	JLCPCB-002
Drawed	EasyEDAPro	RCKid2	
Reviewed	EasyEDAPro		
		VER	SIZE	PAGE 1 OF 6
EasyEDA		V0.1	A4	EasyEDA.com

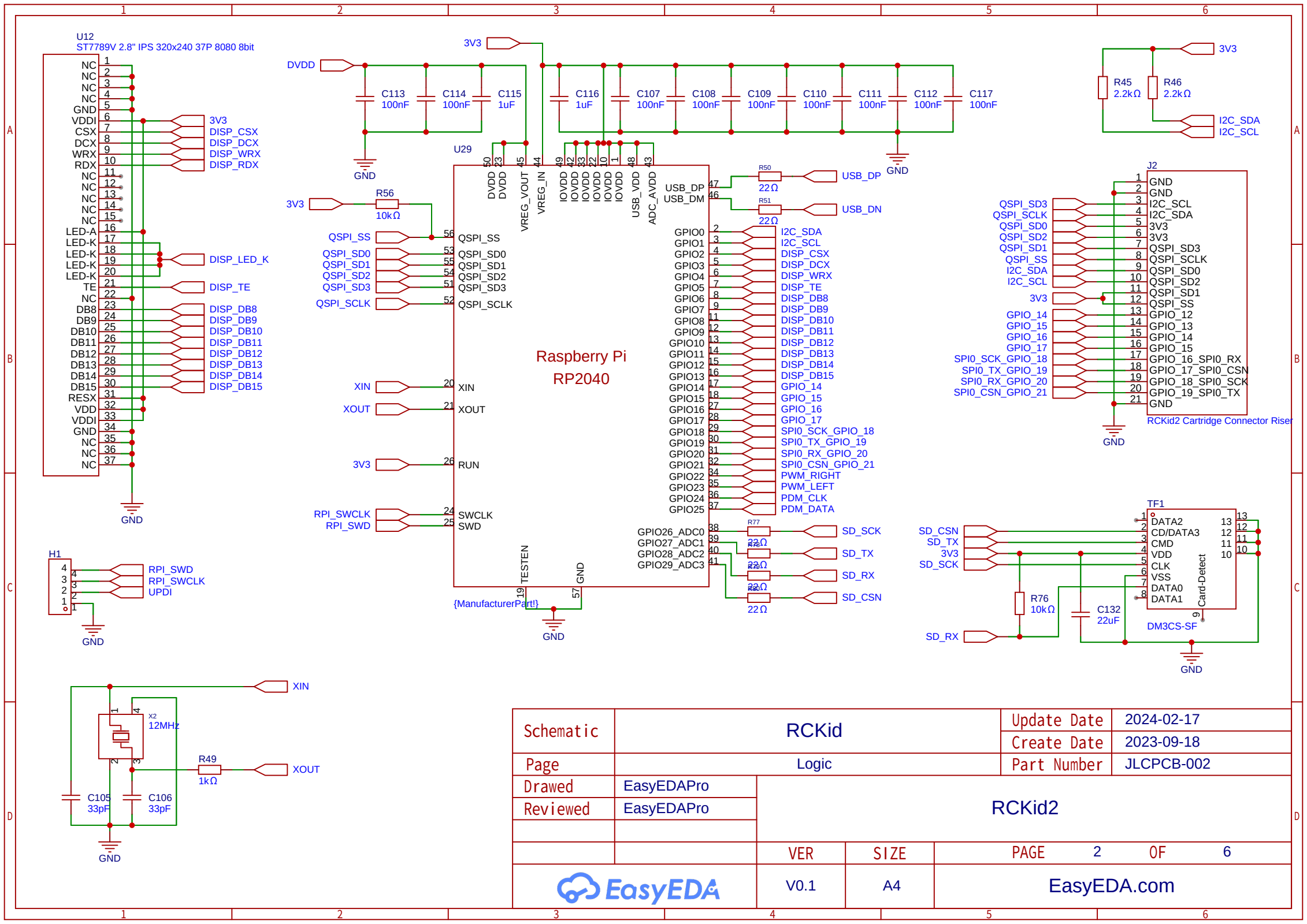
U12
ST7789V 2.8" IPS 320x240 37P 8080 8bit
NC
GND
VDDI
CSX
DCX
WRX
RDX
LED-A
LED-K
TE
DB8
DB9
DB10
DB11
DB12
DB13
DB14
DB15
RESX
VDD
3V3
DISP_CSX
DISP_DCX
DISP_WRX
DISP_RDX
DISP_LED_K
DISP_TE
DISP_DB8
DISP_DB9
DISP_DB10
DISP_DB11
DISP_DB12
DISP_DB13
DISP_DB14
DISP_DB15
DVDD
C113 100nF
C114 100nF
C115 1uF
C116 1uF
C107 100nF
C108 100nF
C109 100nF
C110 100nF
C111 100nF
C112 100nF
C117 100nF
R45 2.2kΩ
R46 2.2kΩ
I2C_SDA
I2C_SCL
U29
Raspberry Pi
RP2040
R56 10kΩ
QSPI_SS
QSPI_SD0
QSPI_SD1
QSPI_SD2
QSPI_SD3
QSPI_SCLK
XIN
XOUT
RUN
SWCLK
SWD
RPI_SWCLK
RPI_SWD
TESTEN
{ManufacturerPart!}
USB_DP
USB_DM
R50 22Ω
R51 22Ω
GPIO0 I2C_SDA
GPIO1 I2C_SCL
GPIO2 DISP_CSX
GPIO3 DISP_DCX
GPIO4 DISP_WRX
GPIO5 DISP_TE
GPIO6 DISP_DB8
GPIO7 DISP_DB9
GPIO8 DISP_DB10
GPIO9 DISP_DB11
GPIO10 DISP_DB12
GPIO11 DISP_DB13
GPIO12 DISP_DB14
GPIO13 DISP_DB15
GPIO14 GPIO_14
GPIO15 GPIO_15
GPIO16 GPIO_16
GPIO17 GPIO_17
GPIO18 SPI0_SCK_GPIO_18
GPIO19 SPI0_TX_GPIO_19
GPIO20 SPI0_RX_GPIO_20
GPIO21 SPI0_CSN_GPIO_21
GPIO22 PWM_RIGHT
GPIO23 PWM_LEFT
GPIO24 PDM_CLK
GPIO25 PDM_DATA
GPIO26_ADC0 SD_SCK
GPIO27_ADC1 SD_TX
GPIO28_ADC2 SD_RX
GPIO29_ADC3 SD_CSN
R77 22Ω
R78 22Ω
R79 22Ω
R80 22Ω
J2
RCKid2 Cartridge Connector Riser
QSPI_SD3
QSPI_SCLK
QSPI_SD0
QSPI_SD2
QSPI_SD1
QSPI_SS
I2C_SDA
I2C_SCL
3V3
GPIO_14
GPIO_15
GPIO_16
GPIO_17
SPI0_SCK_GPIO_18
SPI0_TX_GPIO_19
SPI0_RX_GPIO_20
SPI0_CSN_GPIO_21
GND
GPIO_12
GPIO_13
GPIO_14
GPIO_15
GPIO_16_SPI0_RX
GPIO_17_SPI0_CSN
GPIO_18_SPI0_SCK
GPIO_19_SPI0_TX
H1
RPI_SWD
RPI_SWCLK
UPDI
TF1
DM3CS-SF
DATA2
CD/DATA3
CMD
VDD
CLK
VSS
DATA0
DATA1
Card-Detect
SD_CSN
SD_TX
SD_SCK
SD_RX
R76 10kΩ
C132 22uF
X2 12MHz
R49 1kΩ
C105 33pF
C106 33pF
Schematic
RCKid
Update Date 2024-02-17
Create Date 2023-09-18
Page
Logic
Part Number JLCPCB-002
Drawed EasyEDAPro
Reviewed EasyEDAPro
RCKid2
VER
SIZE
PAGE 2 OF 6
V0.1
A4
EasyEDA.com

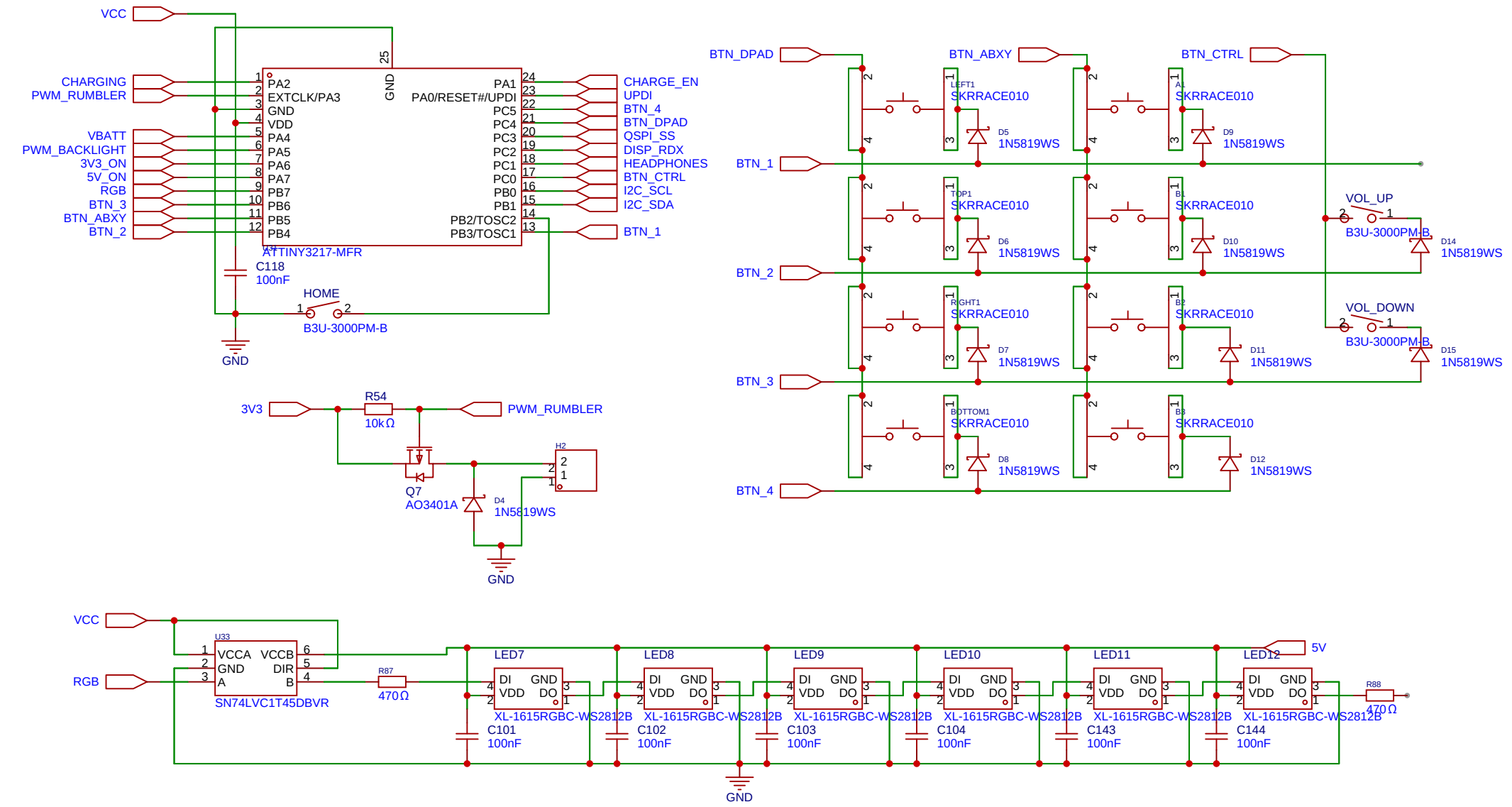

Schematic	RCKid	Update Date	2024-03-08
		Create Date	2023-09-18
Page	IO	Part Number	JLCPCB-002
Drawed	EasyEDAPro	RCKid2	
Reviewed	EasyEDAPro		
		VER	SIZE
		PAGE 3 OF 6	
EasyEDA		V0.1	A4
		EasyEDA.com	

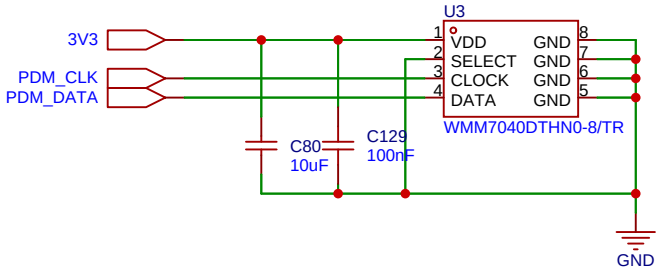

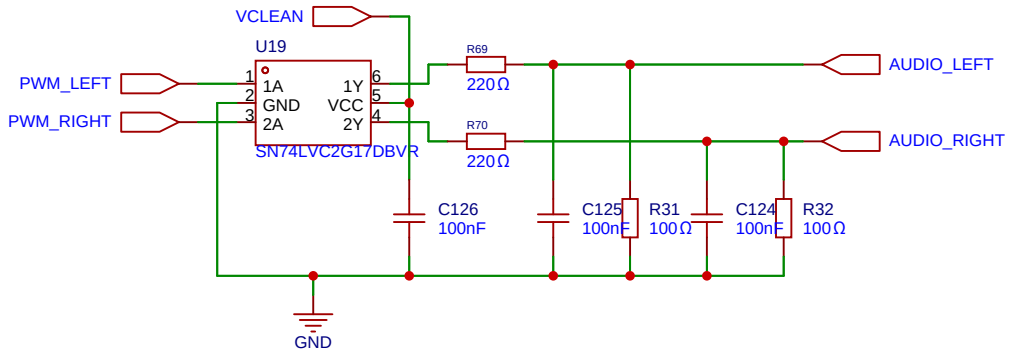

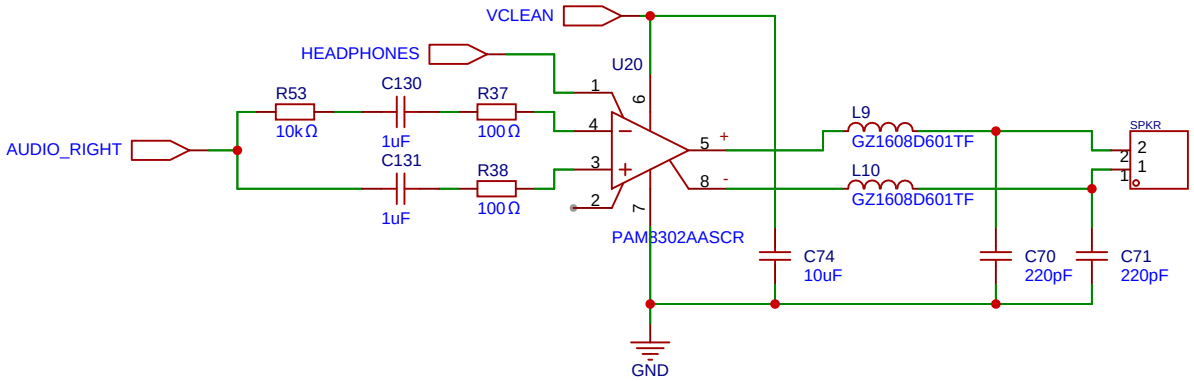

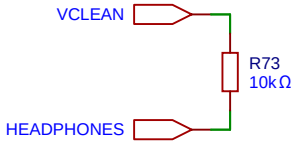

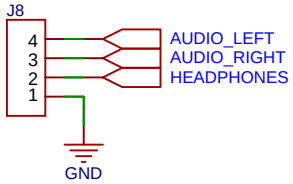

Schematic	RCKid	Update Date	2024-03-08
		Create Date	2023-09-18
Page	Audio	Part Number	JLCPCB-002
Drawed	EasyEDAPro	RCKid2	
Reviewed	EasyEDAPro		
		VER	SIZE	PAGE 4 OF 6
EasyEDA		V0.1	A4	EasyEDA.com

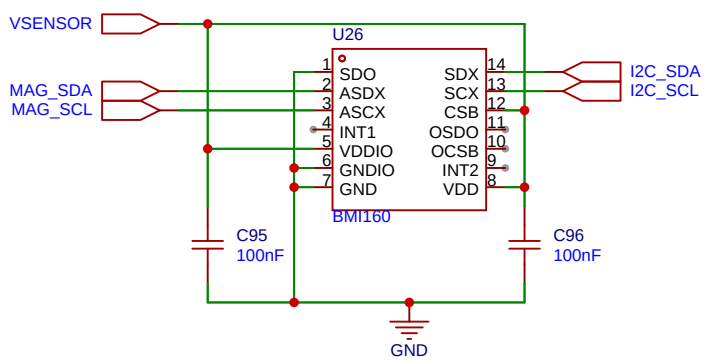

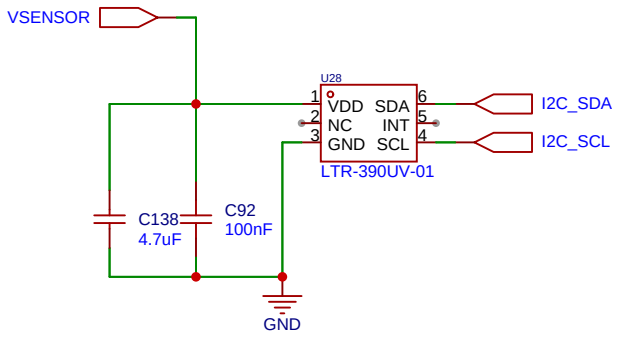

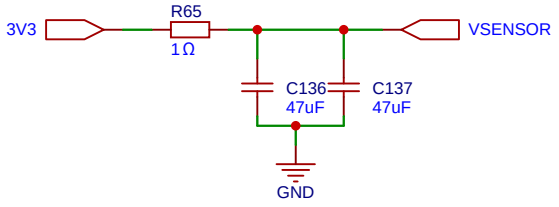

Schematic	RCKid	Update Date	2024-02-18
		Create Date	2023-09-18
Page	Sensors	Part Number	JLCPCB-002
Drawed	EasyEDAPro	RCKid2	
Reviewed	EasyEDAPro		
		VER	SIZE	PAGE 5 OF 6
EasyEDA		V0.1	A4	EasyEDA.com

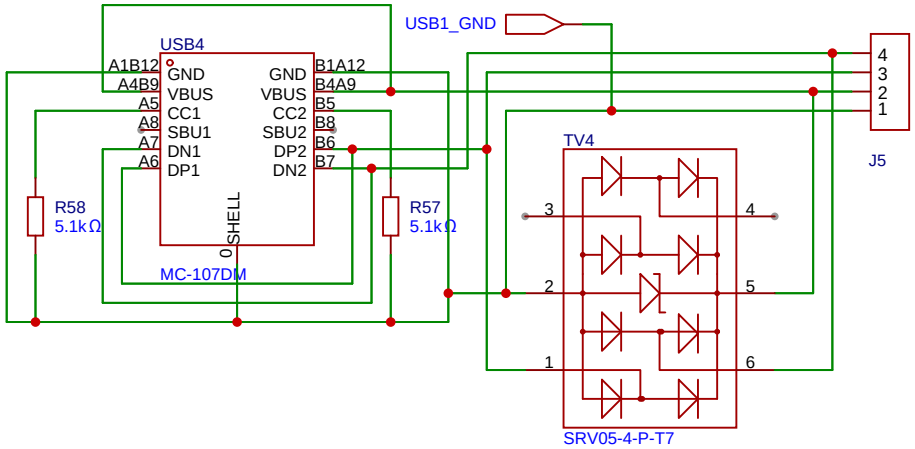

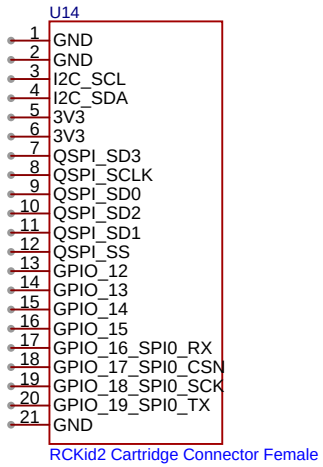

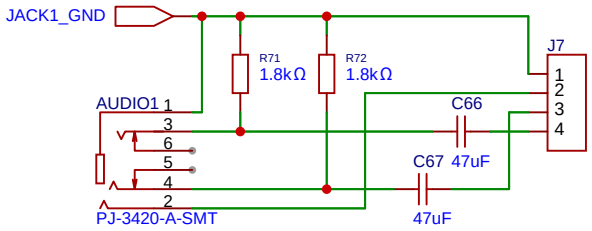

Schematic	RCKid	Update Date	2024-02-16
		Create Date	2023-09-18
Page	Connectors	Part Number	JLCPCB-002
Drawed	EasyEDAPro	RCKid2	
Reviewed	EasyEDAPro		
		VER	SIZE	PAGE 6 OF 6
EasyEDA		V0.1	A4	EasyEDA.com