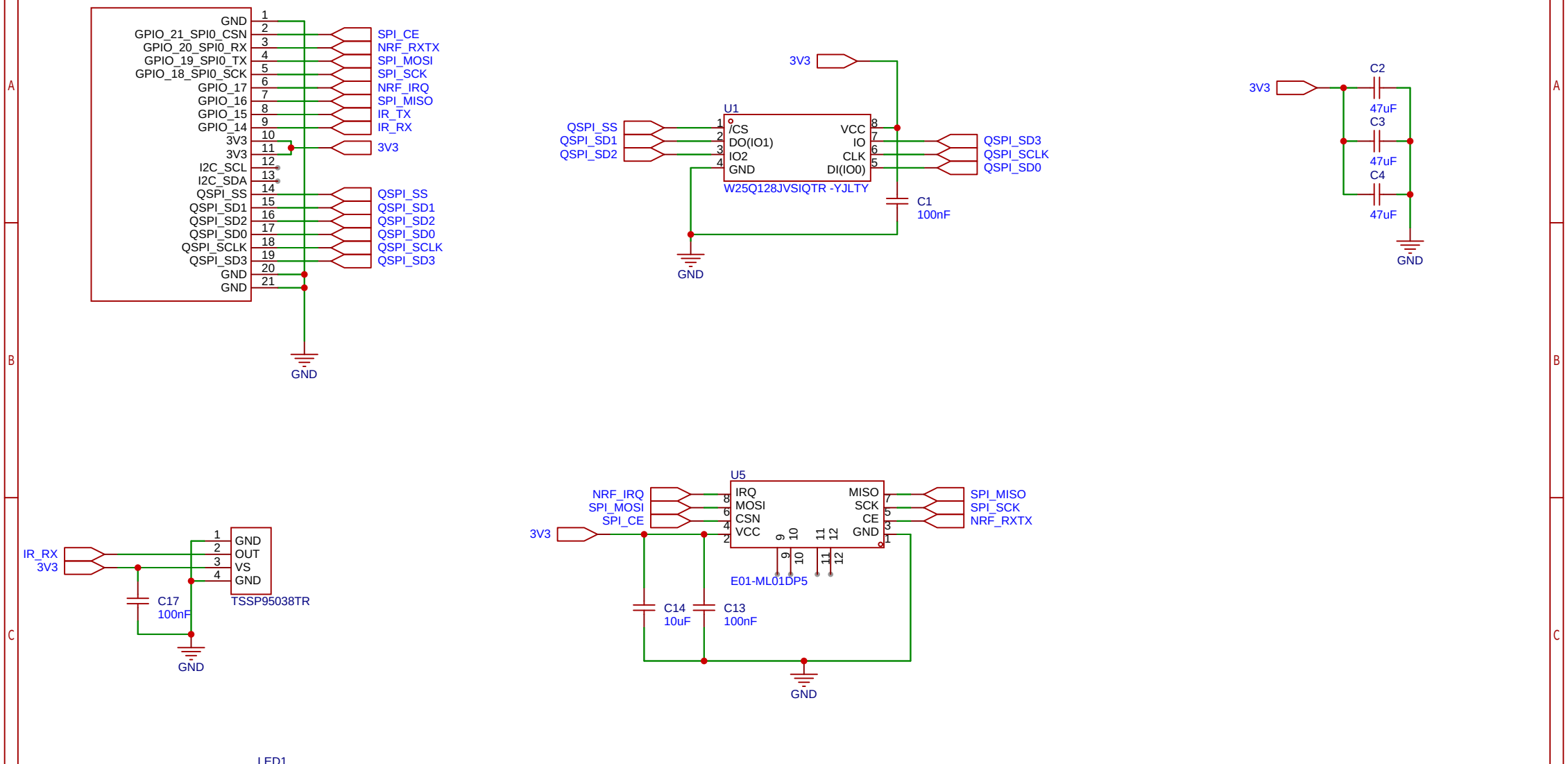

Schematic	Cartridge	Update Date	2023-09-25
		Create Date	2023-09-16
Page	P1	Part Number	JLCPCB-002
Drawed	EasyEDAPro	RCKid2	
Reviewed	EasyEDAPro		
		VER	SIZE	PAGE 1 OF 3
EasyEDA		V0.1	A4	EasyEDA.com

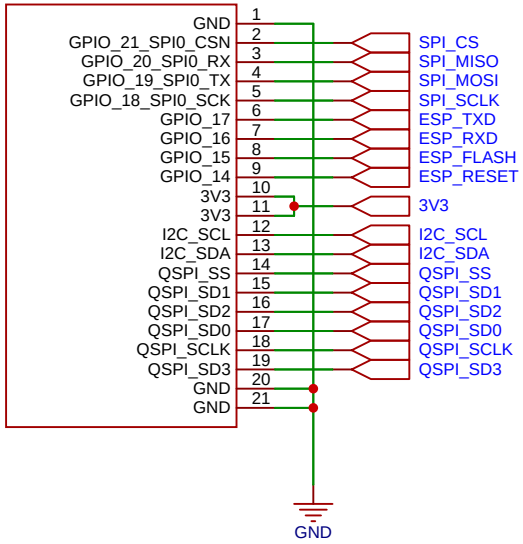

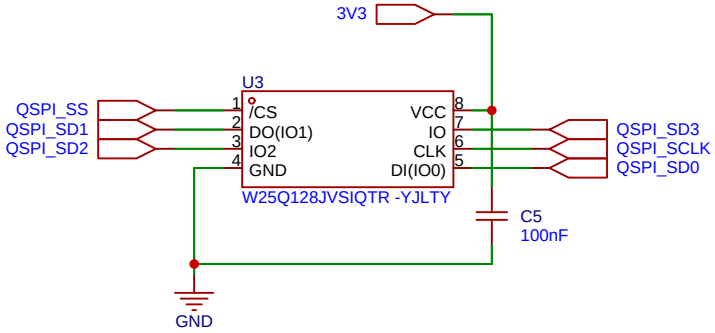

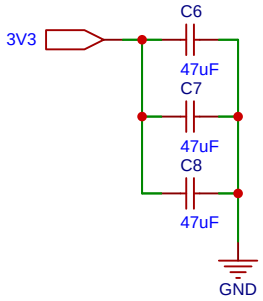

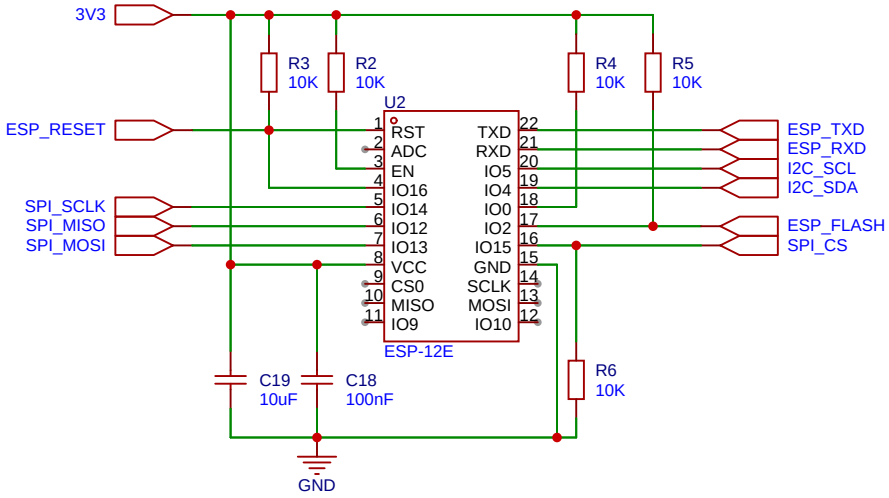

Schematic	Cartridge	Update Date	2023-09-26
		Create Date	2023-09-25
Page	ESP12	Part Number	JLCPCB-002
Drawed	EasyEDAPro	RCKid2	
Reviewed	EasyEDAPro		
		VER	SIZE	PAGE 2 OF 3
EasyEDA		V0.1	A4	EasyEDA.com

CONN2

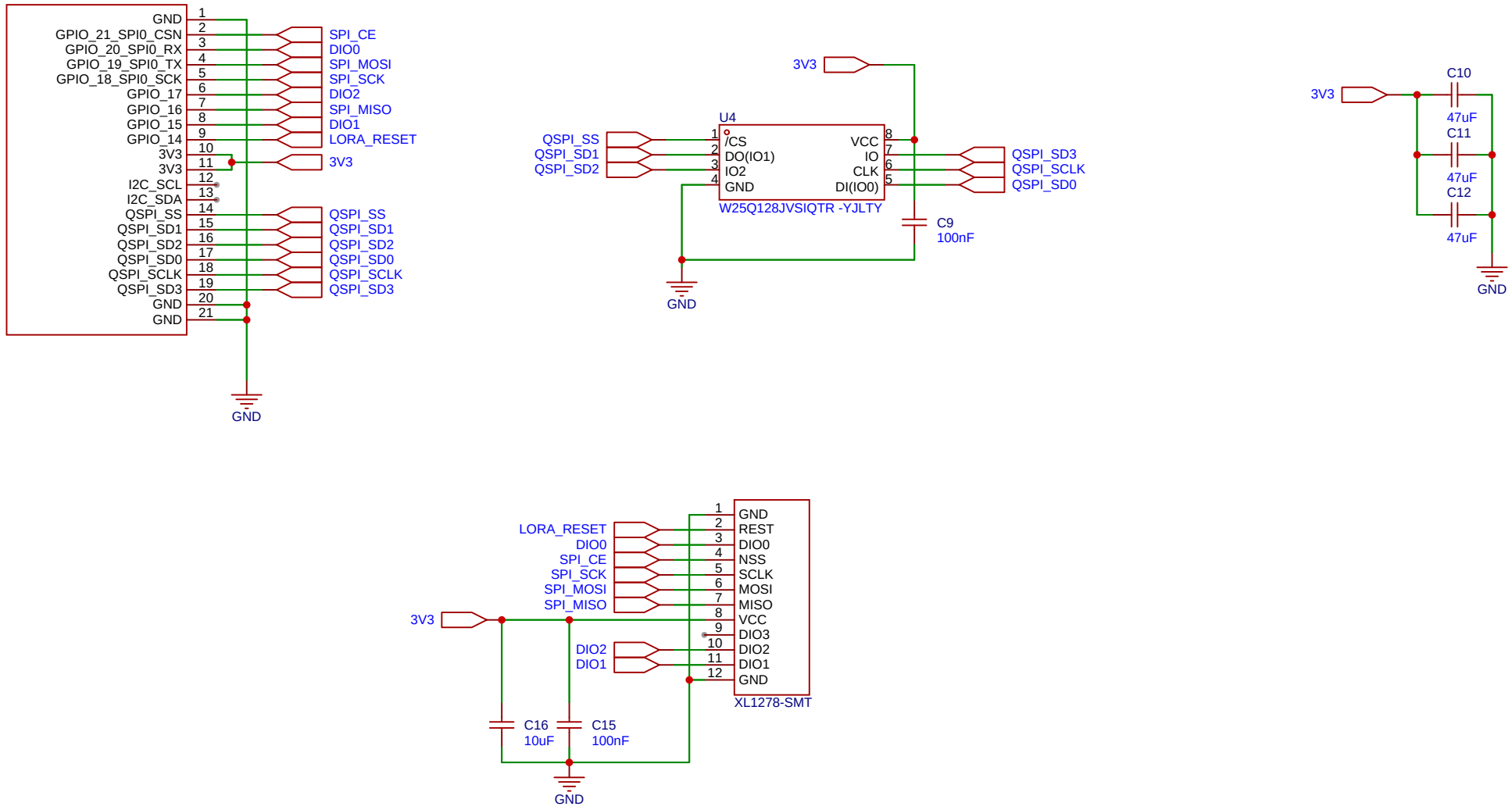

Schematic	Cartridge	Update Date	2023-09-25
		Create Date	2023-09-25
Page	P3	Part Number	JLCPCB-002
Drawed	EasyEDAPro	RCKid2	
Reviewed	EasyEDAPro		
		VER	SIZE	PAGE 3 OF 3
EasyEDA		V0.1	A4	EasyEDA.com