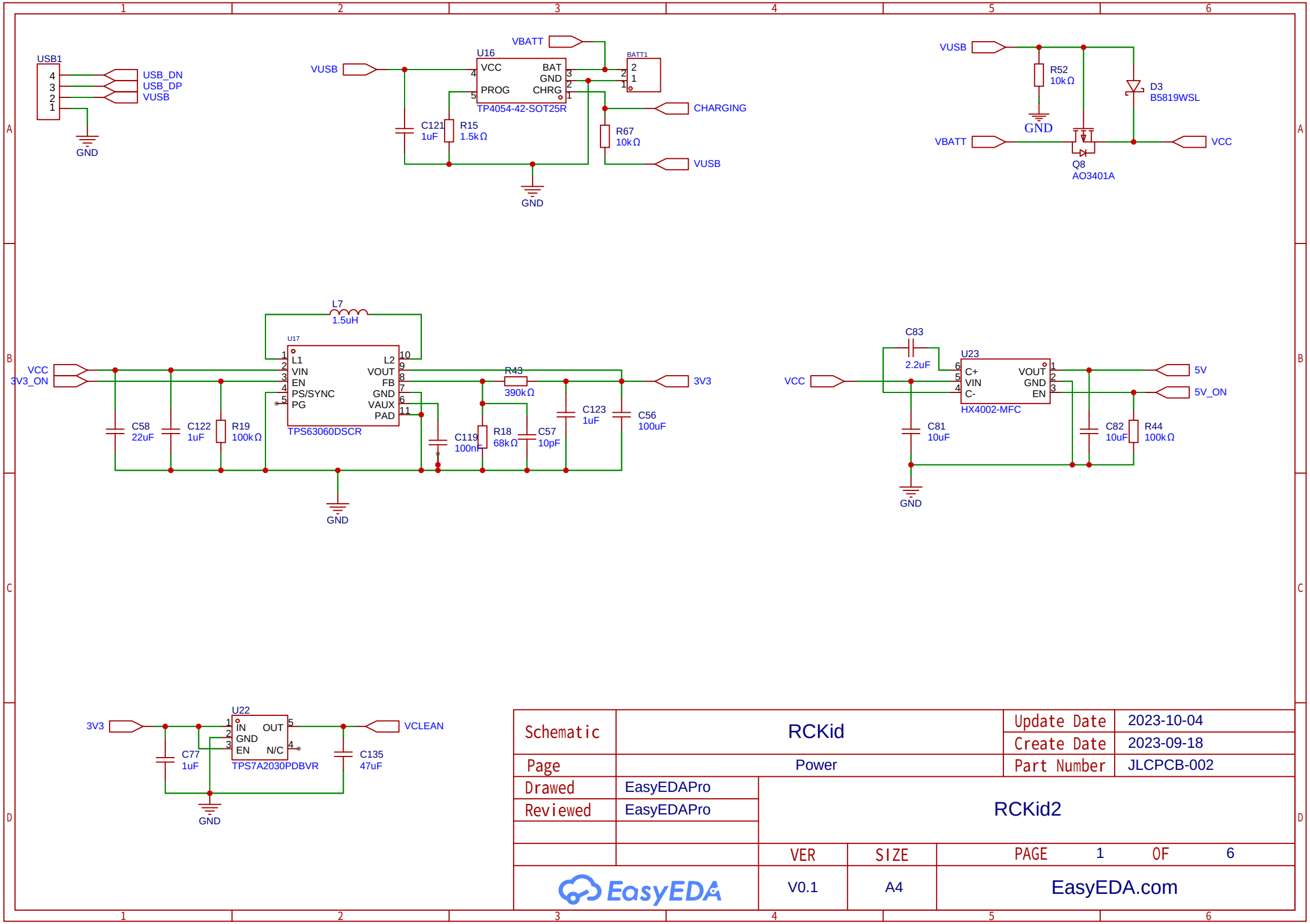

Schematic	RCKid	Update Date	2023-10-04
		Create Date	2023-09-18
Page	Power	Part Number	JLCPCB-002
Drawed	EasyEDAPro	RCKid2	
Reviewed	EasyEDAPro		
		VER	SIZE	PAGE 1 OF 6
EasyEDA		V0.1	A4	EasyEDA.com

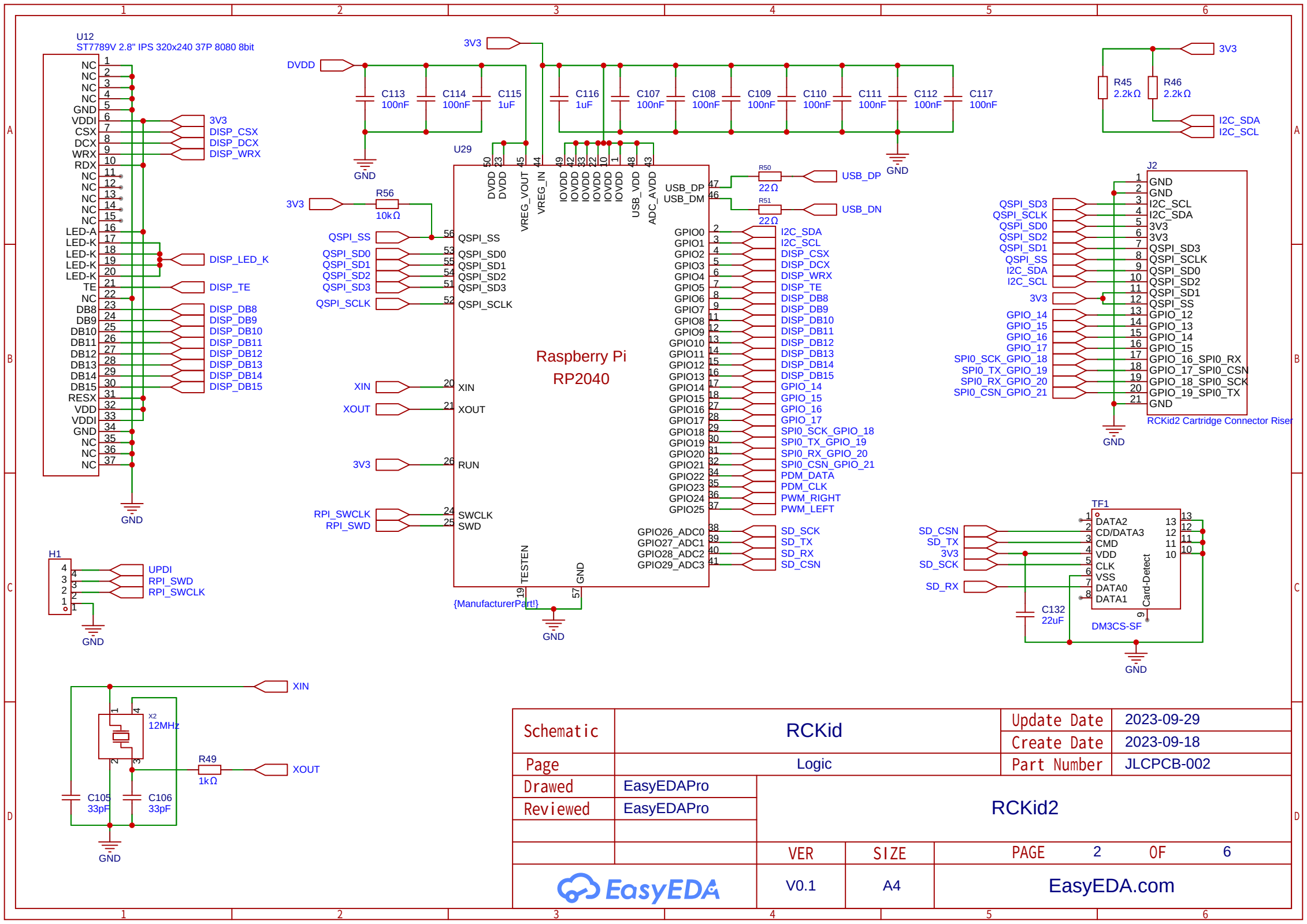

Schematic	RCKid	Update Date	2023-09-29
		Create Date	2023-09-18
Page	Logic	Part Number	JLCPCB-002
Drawed	EasyEDAPro	RCKid2	
Reviewed	EasyEDAPro		
		VER	SIZE	PAGE 2 OF 6
EasyEDA		V0.1	A4	EasyEDA.com

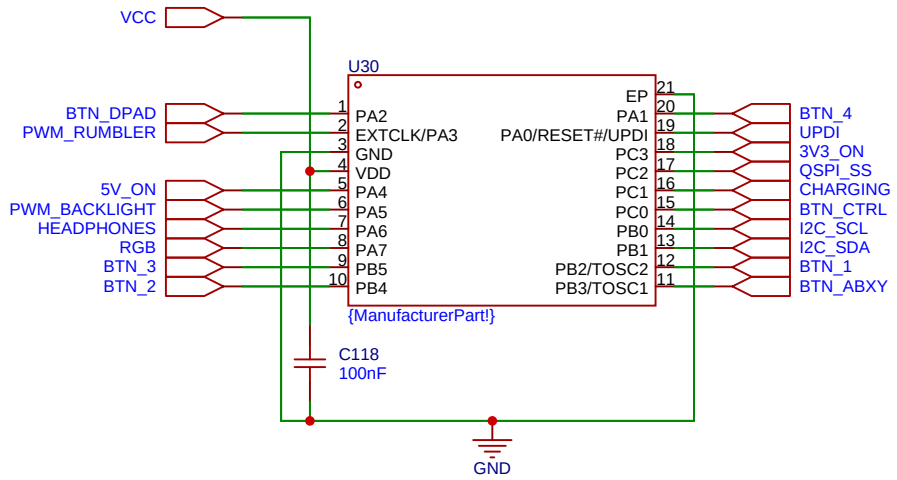

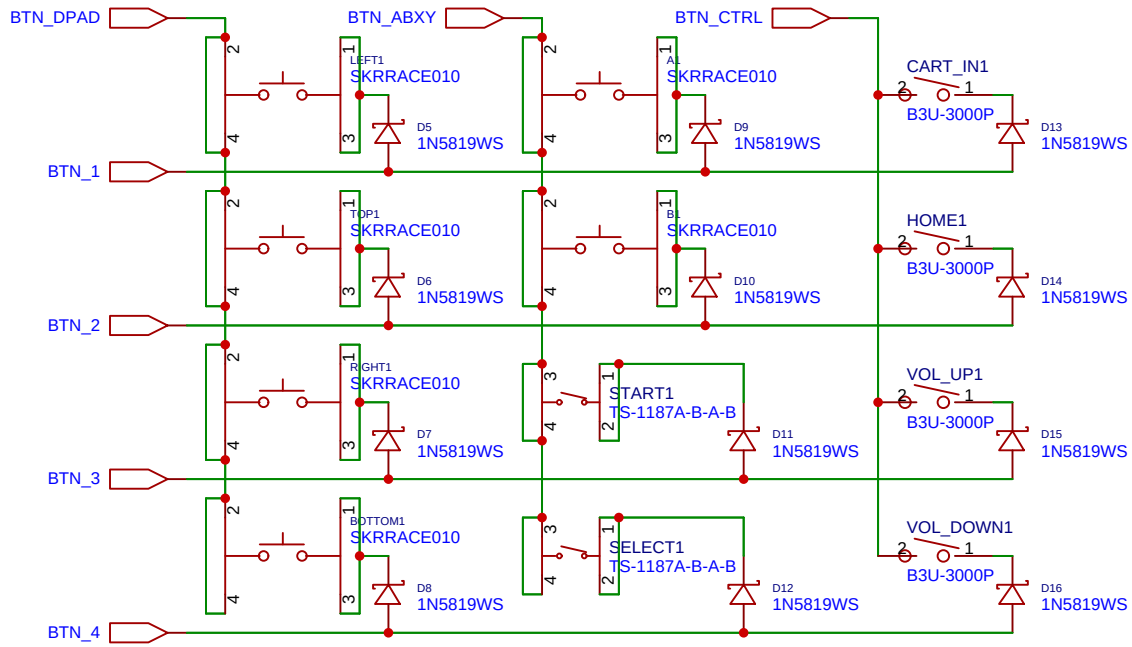

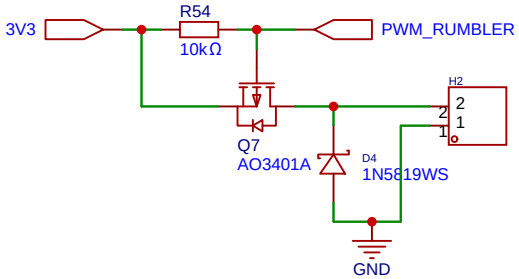

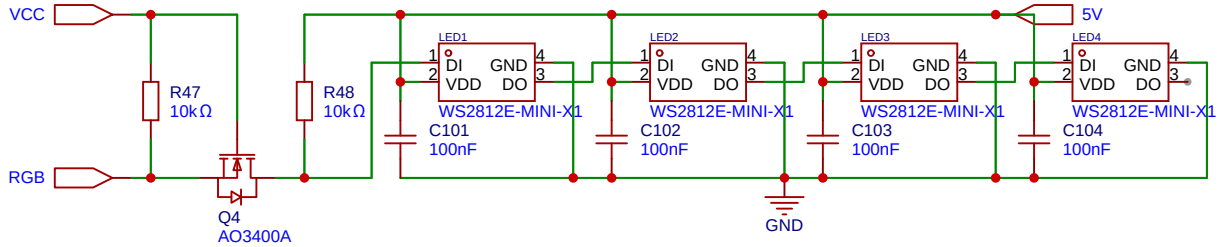

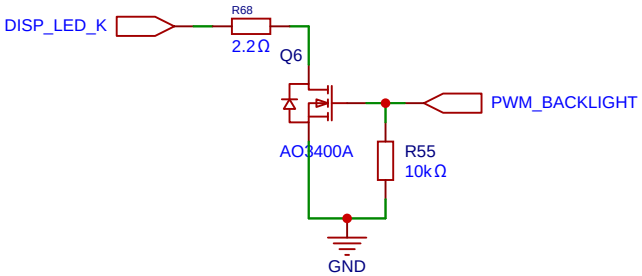

Schematic	RCKid	Update Date	2023-11-01
		Create Date	2023-09-18
Page	IO	Part Number	JLCPCB-002
Drawed	EasyEDAPro	RCKid2	
Reviewed	EasyEDAPro		
		VER	SIZE	PAGE 3 OF 6
EasyEDA		V0.1	A4	EasyEDA.com

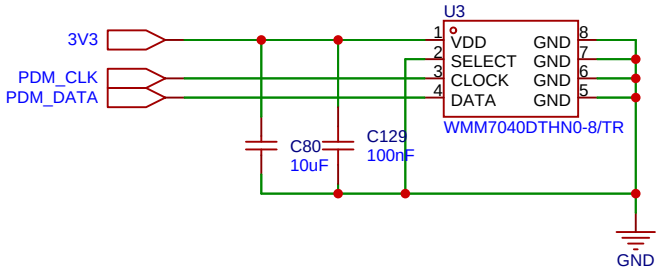

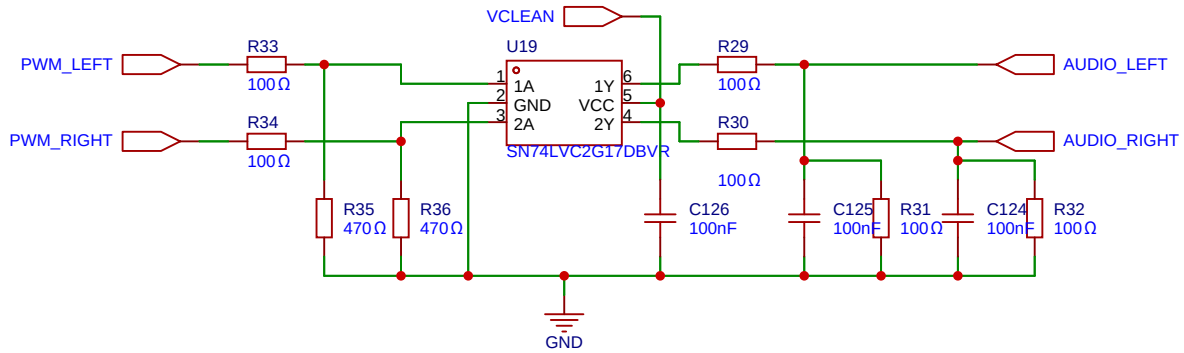

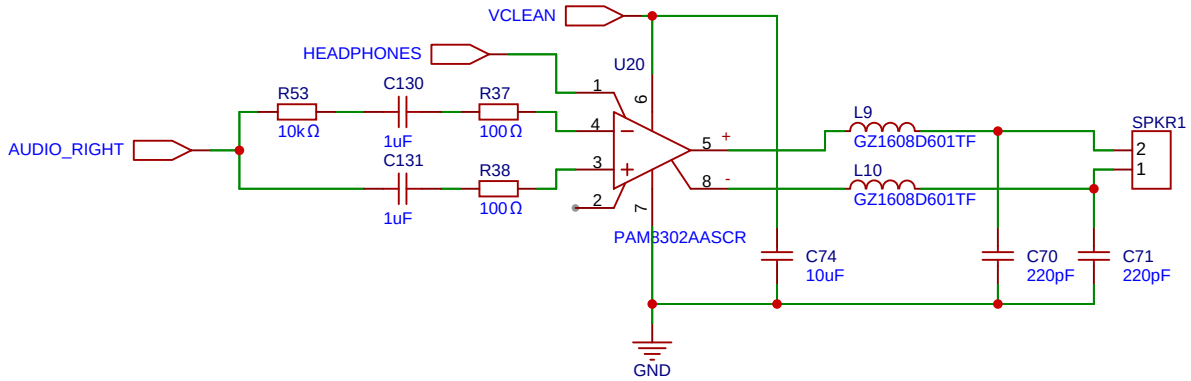

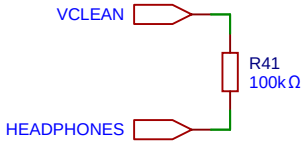

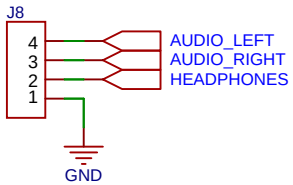

Schematic	RCKid	Update Date	2023-09-27
		Create Date	2023-09-18
Page	Audio	Part Number	JLCPCB-002
Drawed	EasyEDAPro	RCKid2	
Reviewed	EasyEDAPro		
		VER	SIZE	PAGE 4 OF 6
EasyEDA		V0.1	A4	EasyEDA.com

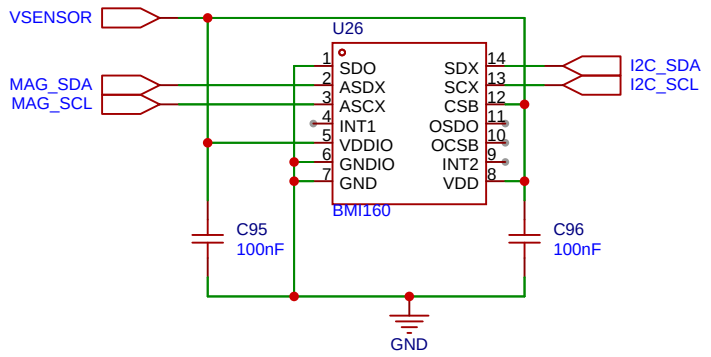

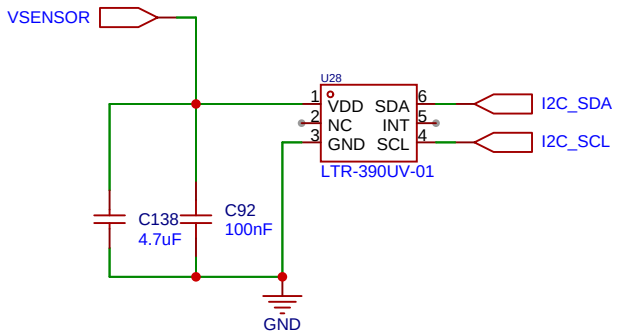

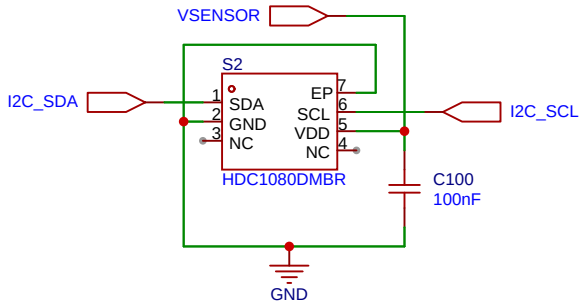

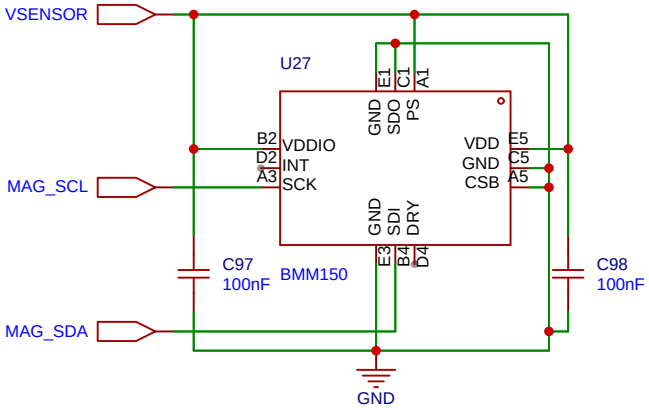

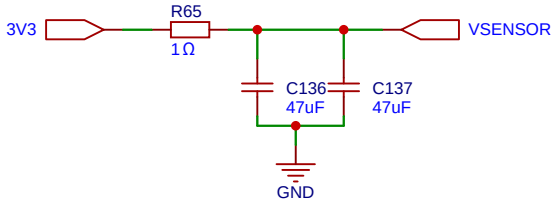

Schematic	RCKid	Update Date	2023-09-28
		Create Date	2023-09-18
Page	Sensors	Part Number	JLCPCB-002
Drawed	EasyEDAPro	RCKid2	
Reviewed	EasyEDAPro		
		VER	SIZE	PAGE 5 OF 6
EasyEDA		V0.1	A4	EasyEDA.com

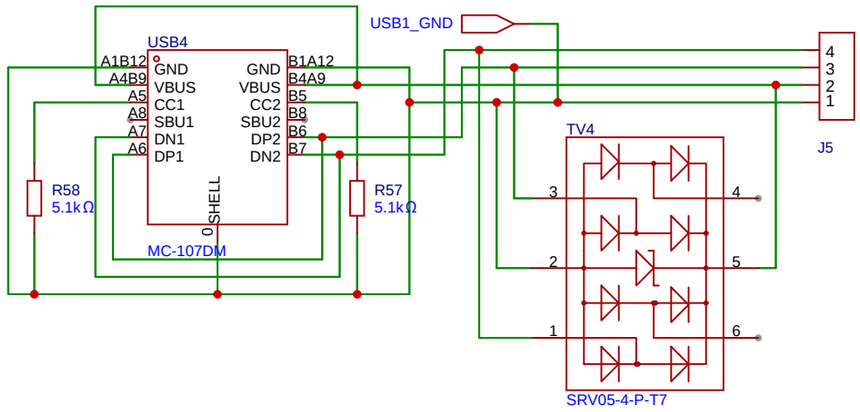

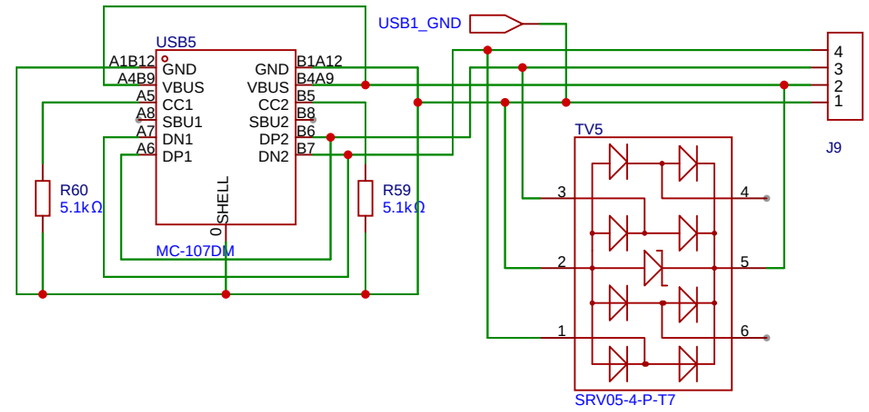

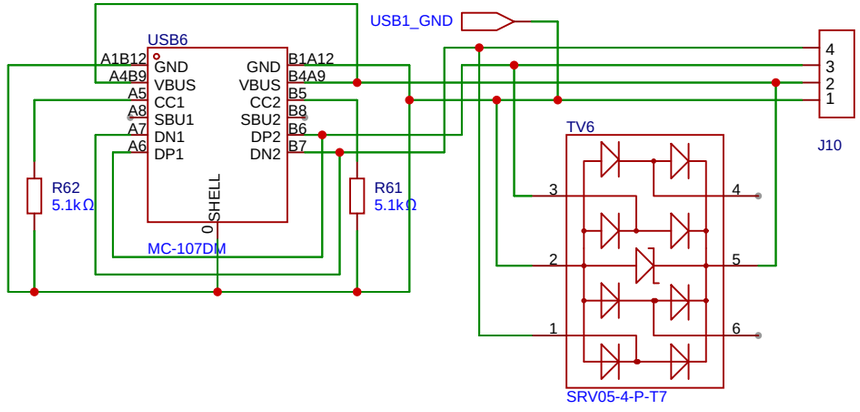

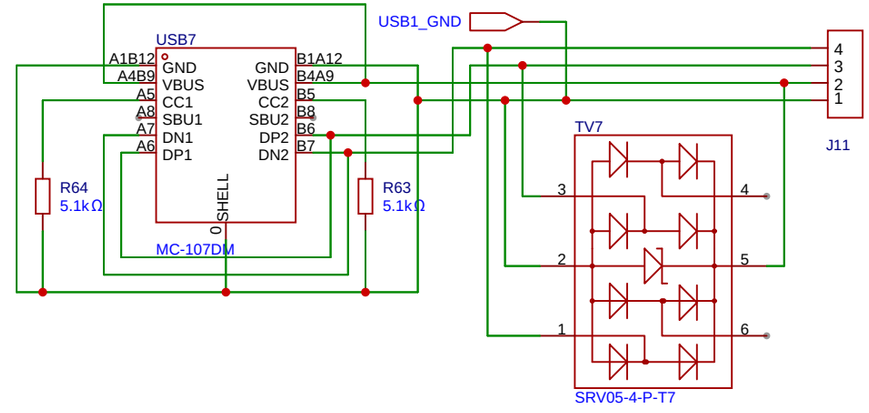

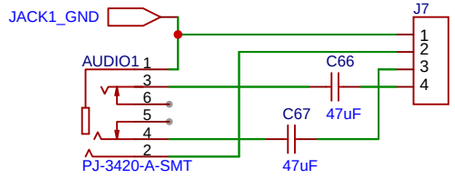

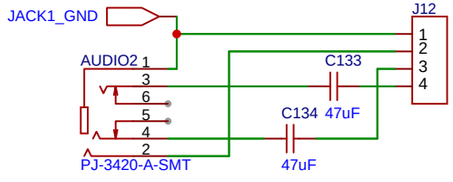

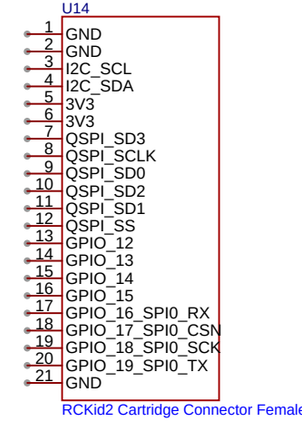

Schematic	RCKid	Update Date	2023-09-27
		Create Date	2023-09-18
Page	Connectors	Part Number	JLCPCB-002
Drawed	EasyEDAPro	RCKid2	
Reviewed	EasyEDAPro		
		VER	SIZE	PAGE 6 OF 6
EasyEDA		V0.1	A4	EasyEDA.com