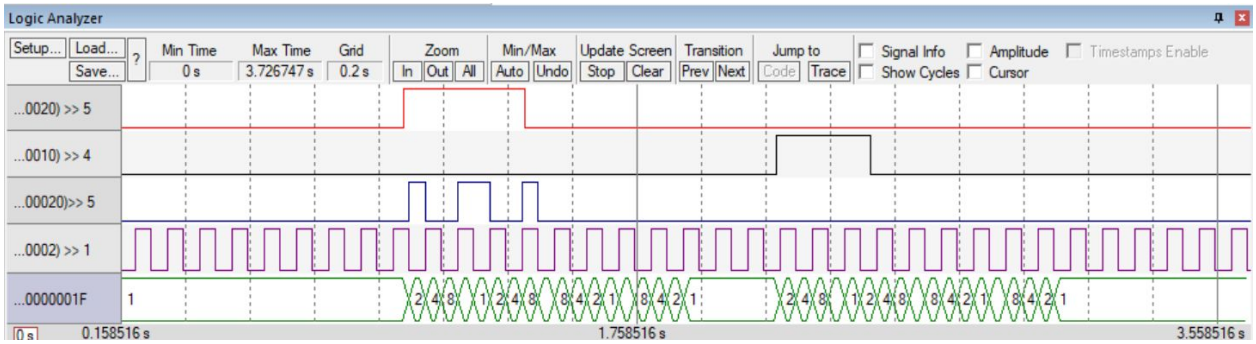
Logic Analyzer
Setup... Load... Save...
Min Time 0 s
Max Time 3.726747 s
Grid 0.2 s
Zoom In Out All
Min/Max Auto Undo
Update Screen Stop Clear
Transition Prev Next
Jump to Code Trace
Signal Info
Show Cycles
Amplitude
Cursor
Timestamps Enable
...0020) >> 5
...0010) >> 4
...00020)>> 5
...0002) >> 1
...0000001F
0.158516 s
1.758516 s
3.558516 s

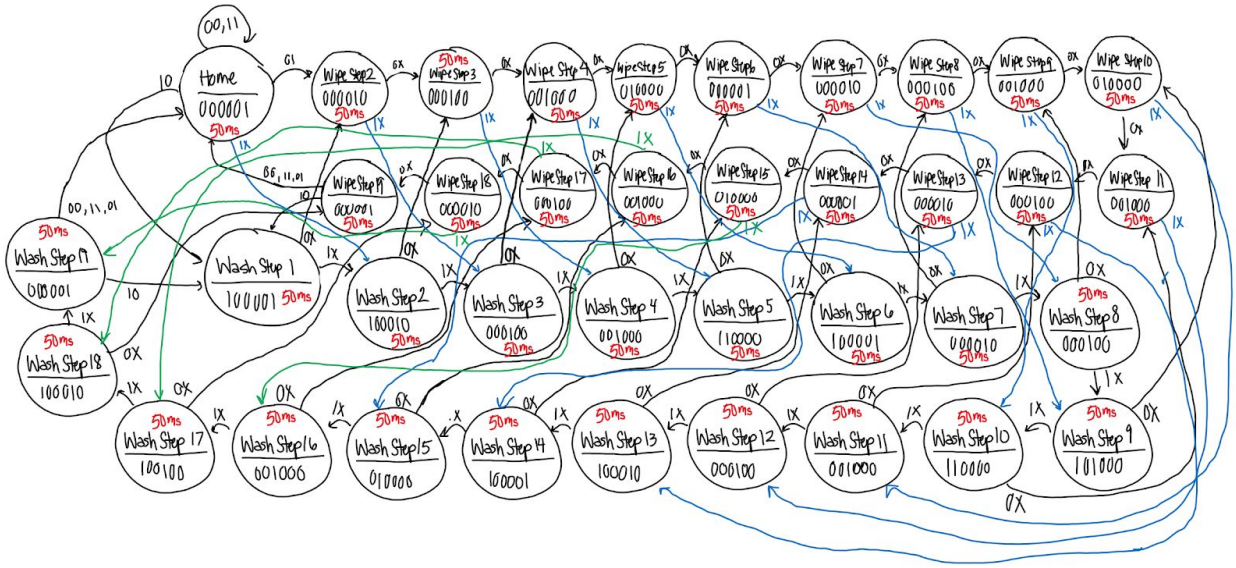
Home 000001
Wipe Step 2 000010
Wipe Step 3 000100
Wipe Step 4 001000
Wipe Step 5 010000
Wipe Step 6 000001
Wipe Step 7 000010
Wipe Step 8 000100
Wipe Step 9 001000
Wipe Step 10 010000
Wipe Step 11 001000
Wipe Step 12 000100
Wipe Step 13 000010
Wipe Step 14 000001
Wipe Step 15 010000
Wipe Step 16 001000
Wipe Step 17 000100
Wipe Step 18 000010
Wipe Step 19 000001
Wash Step 1 100001
Wash Step 2 100010
Wash Step 3 000100
Wash Step 4 001000
Wash Step 5 110000
Wash Step 6 100001
Wash Step 7 000010
Wash Step 8 000100
Wash Step 9 101000
Wash Step 10 110000
Wash Step 11 001000
Wash Step 12 000100
Wash Step 13 100010
Wash Step 14 100001
Wash Step 15 010000
Wash Step 16 001000
Wash Step 17 100100
Wash Step 18 100010
Wash Step 19 010001
50ms
00,11
01
10
00,11,01
00,11,01
1X
0X

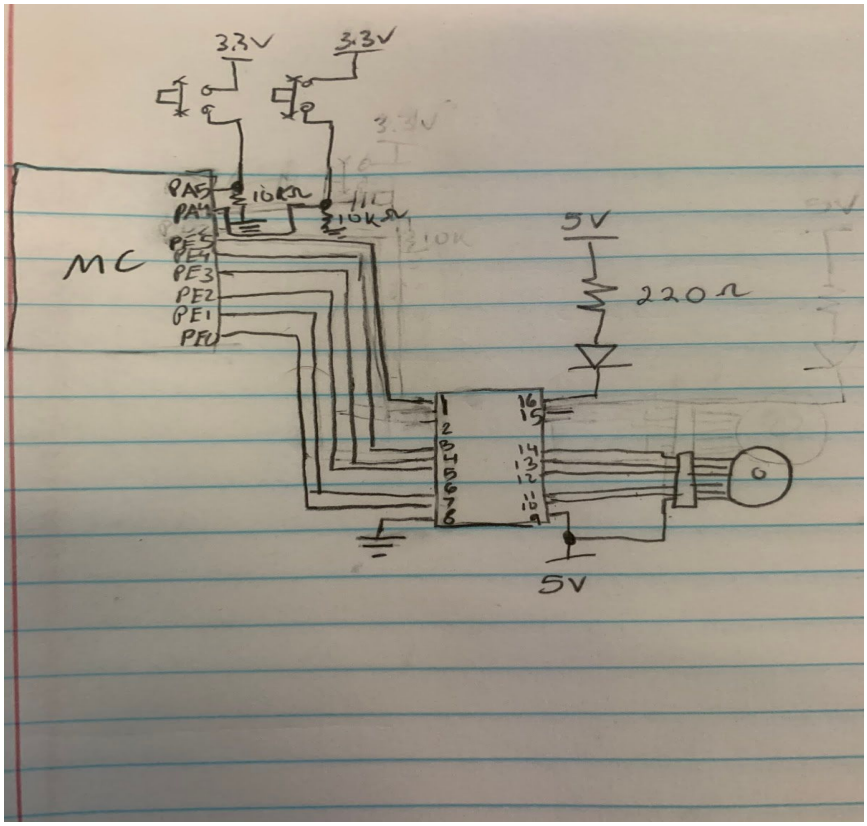
3.3V
3.3V
PA5
PA4
10kΩ
10kΩ
MC
PE4
PE3
PE2
PE1
PE0
5V
220Ω
1
2
3
4
5
6
7
8
16
15
14
13
12
11
10
9
5V